Patent Case Management Judicial Guide

PETER S. MENELL
Berkeley Center for Law & Technology
University of California, Berkeley School of Law

LYNN H. PASAHOW
Fenwick & West LLP

JAMES POOLEY
Morrison & Foerster LLP

MATTHEW D. POWERS
Weil, Gotshal & Manges LLP

in collaboration with

THOMAS FLETCHER
Law Clerk to Hon. Ronald M. Whyte (N.D. Cal.)

CAROLYN CHANG
Fenwick & West LLP

MARC DAVID PETERS
SUE VASTANO VAUGHAN
Morrison & Foerster LLP

NICHOLAS A. BROWN
JEFFREY G. HOMRIG
Weil, Gotshal & Manges LLP

STEVEN C. CARLSON
Fish & Richardson PC

FEDERAL JUDICIAL CENTER

2009

This Federal Judicial Center publication was undertaken in furtherance of the Center's statutory mission to develop educational materials for the judicial branch. While the Center regards the content as responsible and valuable, it does not reflect policy or recommendations of the Board of the Federal Judicial Center.

© 2009 Peter S. Menell, Lynn H. Pasahow, James Pooley & Matthew D. Powers

email: pmenell@law.berkeley.edu

The contents of this volume (in Boolean searchable format), links to Internet-accessible materials cited herein (such as Patent Local Rules, standing orders, and model jury instructions), updates, and recent cases and other developments relating to patent case management can be found at the project's website:

http://www.patentcasemanagement.org

Summary Table of Contents

Table of Contents
Foreword
Preface
Acknowledgments
Chapter 1. General Principles
Chapter 2. Early Case Management
Chapter 3, Preliminary Injunction
Chapter 4. Discovery
Chapter 5. Claim Construction
Chapter 6. Summary Judgment
Chapter 7. Pretrial Case Management
Chapter 8. Trial
Chapter 9. Post-Trial
Chapter 10. ANDA Cases: Patent Infringement Actions Involving FDA-Approved Drugs Under the Hatch-Waxman Act
Chapter 11. Patent Law Primer
Appendix A: Glossary
Appendix B: Acronyms
Appendix C: Patent Resources
Appendix D: Patent Local Rules and Standing Orders
Northern District of California (2008)
District of New Jersey (2008)
Appendix E: Model Patent Jury Instructions
Northern District of California (2007)
Author Biographies
Table of Cases
Index

Table of Contents

Foreword xxvii

Preface xxix

Acknowledgments xxxi

Chapter 1. General Principles

1.1 Purposes of the Patent System 1-1

1.2 A Preliminary Note About Settlement of Patent Cases 1-3

Chapter 2. Early Case Management

2.1 Patent Litigation Timelines and Specialized Local Rules 2-3

2.1.1 Managing Claim Construction 2-3

2.1.1.1 Claim Construction Briefing and Oral Argument 2-4

2.1.1.2 Claim Construction and Discovery 2-5

2.1.1.2.1 Discovery Prior to Claim Construction 2-5

2.1.1.2.2 Fact Discovery After Claim Construction 2-6

2.1.1.2.3 Expert Discovery After Claim Construction 2-6

2.1.1.3 Unless Claim Construction Clearly Will Control the Outcome, It Should Precede Summary Judgment 2-6

2.1.1.4 Claim Construction May Encourage Settlement 2-7

2.1.1.5 Preliminary Injunction Motions Usually Require Preliminary Claim Construction 2-8

2.1.2 Managing the Parties' Claims, Defenses and Counterclaims: Patent Local Rules 2-8

2.2 Complaint and Answer 2-12

2.2.1 Plaintiff Standing Requirements 2-13

2.2.1.1 Infringement Plaintiff 2-13

2.2.1.1.1 Infringement Plaintiff Must Hold All Substantial Patent Rights 2-13

2.2.1.1.2 Plaintiff Must Join All Joint Patent Owners 2-14

2.2.1.1.3 An Exclusive Licensee Must Sometimes Join Its Licensor 2-14

2.2.1.1.4 A Nonexclusive Licensee Has No Standing to Sue 2-15

2.2.1.1.5 Patentee Can Only Convey Right to Sue by Transferring Substantially All Patent Rights 2-15

2.2.1.1.6 Standing Motions Result in Dismissal Without Prejudice 2-16
2.2.1.2 Declaratory Judgment Plaintiff 2-16
2.2.1.2.1 Defendant's Declaratory Judgment Counterclaims Are Not Mooted by Dismissal of Plaintiff's Infringement Claims 2-17
2.2.1.2.2 Assignor Is Estopped from Seeking Declaratory Judgment of Invalidity 2-18
2.2.1.2.2.1 Parties in Privity with Assignor Are also Estopped 2-18
2.2.1.2.3 Actual Case or Controversy Can Exist for Licensee in Good Standing Even in Absence of Material Breach 2-19
2.2.2 Defendant Standing Requirements 2-20
2.2.2.1 Infringement Defendants 2-20
2.2.2.2 Declaratory Judgment Defendants 2-20
2.2.3 Pleading 2-20
2.2.3.1 Infringement 2-20
2.2.3.2 Willful Infringement 2-21
2.2.3.2.1 Opinions of Counsel 2-22
2.2.3.2.2 Privilege Issues Relating to Opinions of Counsel 2-22
2.2.3.3 Defenses 2-23
2.2.3.3.1 Invalidity Defenses 2-23
2.2.3.3.2 Unenforceability Defenses 2-23
2.2.3.3.2.1 Inequitable Conduct Pled with Particularity 2-23
2.2.3.3.2.2 Privilege Issues Relating to Unenforceability 2-24
2.2.4 Counterclaims 2-24
2.2.4.1 Compulsory Counterclaims 2-25
2.2.4.2 Non-Compulsory Counterclaims 2-25
2.2.5 Potential Overlap with Non-Patent Claims; Choice of Law 2-25
2.2.6 Interaction with Other Types of Actions 2-26
2.2.6.1 Bankruptcy 2-26
2.2.6.2 International Trade Commission Actions 2-27
2.2.6.3 PTO Actions—Re-examination and Re-issue 2-27

2.2.7 Rule 11: Pre-Suit Investigations—Objective Good Faith Basis for Filing Pleading 2-29
2.3 Jurisdiction and Venue 2-29
2.3.1 Personal Jurisdiction 2-29
2.3.2 Subject-Matter Jurisdiction 2-30
2.3.2.1 Original Jurisdiction 2-30
2.3.2.2 Supplemental Jurisdiction 2-30
2.3.3 Venue 2-31
2.3.3.1 Venue Transfer Motions 2-31
2.3.4 Multidistrict Coordination 2-32
2.4 Scheduling 2-33
2.5 Case Management Conference 2-33
2.6 Settlement and Mediation 2-38
2.6.1 Initiation of the Mediation Process 2-39
2.6.2 Selection of the Mediator 2-40
2.6.3 Scheduling the Mediation 2-40
2.6.4 Powers of the Mediator and Who Should Be Present During Mediation 2-41
2.6.5 Confidentiality of the Mediation 2-42
2.6.6 Relationship of the Mediation to the Litigation Schedule 2-43
2.6.7 Mediating Multi-Party and Multi-Jurisdictional Cases 2-43
2.6.8 Factors Affecting the Likelihood of Settlement of Particular Categories of Cases 2-44
Appendix 2.1: Scheduling Order, Eastern District of Texas 2-49
Appendix 2.2: Draft Advisory Statement 2-59
Appendix 2.3: Protective Order, Eastern District of Texas 2-63
Appendix 2.4(a): Mediation Evaluation Form for Attorneys, Northern District of Illinois 2-71
Appendix 2.4(b): Mediation Evaluation Form for Mediators, Northern District of Illinois 2-75
Appendix 2.4(c): Mediation Evaluation Form for Parties, Northern District of Illinois 2-79

Chapter 3. Preliminary Injunction
3.1 Introduction 3-1
3.1.1 The Special Circumstances of the Preliminary Injunction (PI) Application in Patent Cases 3-1
3.1.2 Opportunities Presented by PI Applications in Patent Cases 3-2
3.1.3 Frequency of PI Applications in Patent Cases 3-3
3.1.4 Governing Legal Standards: § 283, Federal Circuit Law, and Fed. R. Civ. P. 65 3-4
3.1.5 Tension Between Right to Exclude and Equitable Considerations 3-6
3.1.6 Meaning of Status Quo 3-6
3.2 Standards and Burdens 3-7
3.2.1 Discretion of Trial Court 3-7
3.2.2 Factors to Be Considered 3-7
3.2.2.1 Reasonable Likelihood of Success on the Merits 3-8
3.2.2.1.1 Claim Construction and Infringement 3-8
3.2.2.1.2 Invalidity 3-9
3.2.2.2 Irreparable Harm if the PI Is Not Granted 3-9
3.2.2.2.1 Presumption 3-9
3.2.2.2.2 Evidentiary Factors 3-10
3.2.2.2.3 Non-Practicing Entities 3-12
3.2.2.3 Balance of Hardships 3-13
3.2.2.4 Impact on the Public Interest 3-14
3.2.2.5 Burdens of Proof and Persuasion 3-15
3.2.2.6 Effect of Proceedings in the Patent and Trademark Office 3-16
3.3 Temporary/Ex Parte Orders 3-17
3.3.1 Generally 3-17
3.3.2 Procedure 3-18
3.4 Discovery 3-19
3.5 Hearing 3-21
3.5.1 Whether to Conduct a Hearing 3-21
3.5.2 Notice and Scheduling 3-22
3.5.3 Evidentiary Showing—What to Expect 3-22
3.6 Rule 65 Trial 3-23
3.7 Bond 3-24

3.8 Order 3-25
3.8.1 Specificity 3-25
3.8.2 Parties Affected 3-26
3.8.3 Modification 3-27
3.9 Appellate Review 3-28
3.9.1 Writ Review 3-28
3.9.2 Stays 3-29
3.10 Enforcement 3-30
Appendix 3.1: Template for Order Granting a Preliminary Injunction 3-32

Chapter 4. Discovery
4.1 Controlling Law and Standard of Review, ... 4-2
4.2 Scope of Patent Discovery, ... 4-2
4.2.1 Initial Disclosures, ... 4-2
4.2.2 Requests for Production of Documents, ... 4-3
4.2.3 Interrogatories, ... 4-4
4.2.4 Depositions 4-5
4.2.5 Protective Orders—Handling of Confidential Documents 4-6
4.2.5.1 Over-Designation of Confidential Documents 4-7
4.2.5.2 Claw-Back Provisions For Privileged Documents 4-8
4.2.5.3 Prosecution Bars 4-9
4.2.6 Foreign Discovery Issues 4-9
4.3 Claim Construction and Discovery 4-10
4.4 Electronic Discovery 4-11
4.5 Management of Discovery Disputes 4-12
4.6 Common Discovery Motions 4-13
4.6.1 Discovery Regarding Patentee's Pre-Filing Investigation 4-13
4.6.2 Production of Information About Products 4-13
4.6.3 Contentions About Infringement, Invalidity, and Unenforceability 4-14
4.6.4 Bifurcation or Stay of Discovery Pending Re-Examination of Patent 4-15
4.6.5 Bifurcation or Stay of Discovery Pending Early Dispositive Motion 4-17
4.6.6 Bifurcation or Stay of Discovery on Issues Bifurcated for Trial 4-17

4.6.7 Privilege Waiver Based on Defendant's Election to Rely on Advice of Counsel 4-18
4.6.8 Discovery from Patent Prosecution Counsel 4-19
4.6.9 Access to Confidential Information by Patent Prosecution Counsel 4-20
4.6.10 License Agreements and Other Third-Party Confidential Information 4-21
Appendix 4.1: Protective Order, Eastern District of Texas 4-23

Chapter 5. Claim Construction
5.1 Timing and Procedure 5-4
5.1.1 Timing of *Markman* Hearings 5-4
5.1.2 Pre-*Markman* Procedures 5-5
5.1.2.1 Mandatory Disclosure of Positions 5-6
5.1.2.1.1 Early Disclosure of Infringement and Invalidity Contentions 5-6
5.1.2.1.2 Disclosure of Claims to Construe and Proposed Constructions 5-7
5.1.2.1.3 Mechanisms for Limiting the Number of Claims Terms to Construe 5-7
5.1.2.1.3.1 Severance Versus Postponement 5-9
5.1.2.1.4 Recommended Approach: Mandatory Disclosure of Impact of Proposed Constructions 5-10
5.1.2.2 Educating the Court About Underlying Science and Technology 5-12
5.1.2.2.1 Technology Tutorials 5-14
5.1.2.2.1.1 Anticipating the Need for an Appellate Record 5-15
5.1.2.2.2 Court-Appointed Experts 5-15
5.1.2.2.2.1 Technical Advisor 5-15
5.1.2.2.2.2 Special Master 5-17
5.1.2.2.2.3 Expert Witness 5-18
5.1.3 Conduct of the *Markman* Hearing 5-18
5.1.3.1 The "Evidentiary" Nature of *Markman* Hearings 5-18
5.1.3.2 Application of the Federal Rules of Evidence 5-19
5.1.3.3 Safeguards on Extrinsic Evidence 5-19

5.1.3.4 Evidence of the Accused Device 5-20
5.1.3.5 Evidence of the Prior Art 5-20
5.1.3.6 The Need to Focus *Markman* Proceedings on Claim Interpretation 5-21
5.1.3.7 Sequence of Argument 5-22
5.1.4 The *Markman* Ruling 5-22
5.1.4.1 Interrelationship to Jury Instructions 5-22
5.1.4.2 Basis for Appellate Review 5-23
5.1.4.3 Not All Terms Require "Construction" 5-23
5.1.4.4 The Court May Adopt Its Own Construction 5-24
5.1.4.5 Tentative Rulings Prior to the *Markman* Hearing 5-24
5.1.5 Amendments to Infringement and Invalidity Contentions 5-24
5.1.6 Interlocutory Appeal of *Markman* Rulings 5-25
5.1.7 Application of the *Markman* Ruling to Trial 5-26
5.2 Analytic Framework and Substantive Principles 5-27
5.2.1 Claim Drafting: The Genesis and Evolution of Claim Terms 5-28
5.2.2 Sources for Deriving Claim Meaning 5-30
5.2.2.1 Principal Source: Intrinsic Evidence 5-31
5.2.2.1.1 Prosecution History 5-31
5.2.2.1.2 Related and Foreign Applications 5-32
5.2.2.2 Extrinsic Evidence Permissible, But It May Not Contradict or Override Intrinsic Evidence 5-33
5.2.2.2.1 Illustrations of Reliance (and Non-Reliance) Upon Extrinsic Evidence 5-35
5.2.2.2.2 Conclusory Expert Opinions Should Be Disregarded 5-37
5.2.3 Claim Construction: Two Stages of Analysis 5-37
5.2.3.1 Step 1: Is Construction of a Claim Required 5-38
5.2.3.1.1 Is There a Genuine Dispute About the Claim Term? 5-38
5.2.3.1.2 Would Claim Construction Help the Jury? 5-39
5.2.3.1.3 Is Claim Construction a Priority? 5-39
5.2.3.1.4 Have the Claims Been Construed Before? 5-39
5.2.3.1.5 Is the Term Amenable to Construction? 5-40
5.2.3.1.5.1 Lay Terms 5-41
5.2.3.1.5.2 Terms of Degree 5-42

5.2.3.1.5.2.1 The Court Should Not Delineate Terms of Degree "Where the Patent Provides No Standard" 5-43
5.2.3.1.5.2.2 The Appropriate Standard for Defining or Declining to Define Terms of Degree 5-43
5.2.3.1.5.3 Technical Terms 5-44
5.2.3.2 Step 2: Interpretation of Claim Terms 5-45
5.2.3.2.1 Claim Construction Framework 5-46
5.2.3.2.2 Starting Point for Analysis: "Ordinary Meaning" 5-49
5.2.3.2.2.1 "Presumption of Dictionary Definition" Obsolete 5-50
5.2.3.2.2.2 No "Heavy Presumption" of Ordinary Meaning; No Requirement of Explicit Definition in Order to Depart from Ordinary Meaning 5-51
5.2.3.2.3 Interpreting Claim Language in Light of the Specification 5-51
5.2.3.2.3.1 The Role of Preferred Embodiments in Claim Construction 5-52
5.2.3.2.3.1.1 Claim Scope Generally Includes Preferred Embodiments 5-52
5.2.3.2.3.1.2 Is the Patent Limited to the Preferred Embodiments? 5-53
5.2.3.2.3.1.3 Does the Number and/or Range of Embodiments Affect the Scope of the Claims? 5-54
5.2.3.2.3.1.4 Does Ambiguity in a Claim Term Limit its Scope to Preferred Embodiment(s)? 5-55
5.2.3.2.3.1.5 Characterizations of "The Invention" or "The Present Invention" 5-56
5.2.3.2.3.2 Distinctions Over the Prior Art 5-57
5.2.3.2.3.3 Consistent Usage of Claim Terms 5-58
5.2.3.2.3.4 Prosecution Disclaimers 5-58
5.2.3.2.4 Looking to Other Claims: The Doctrine of Claim Differentiation 5-59

5.2.3.2.4.1 Presumption of Claim Differentiation May Be Rebutted Based on Specification or Prosecution History Estoppel 5-61
5.2.3.2.4.2 Presumption of Claim Differentiation Does Not Apply to Means-Plus-Function Claims 5-61
5.2.3.2.5 Significance of the "Preamble" in Claim Construction..... 5-61
5.2.3.3 Claim Terms Having Conventional, Presumed, or Established Meanings..... 5-63
5.2.3.4 Interpreting Terms to Preserve Validity 5-69
5.2.3.5 Special Case: Means-Plus-Function Claims Limited to Structures in Specification and Equivalents Thereof as of Time of Issuance 5-69
5.2.3.5.1 Step 1: Is the Term in Question "Means Plus Function"? 5-70
5.2.3.5.2 Step 2: Interpretation of Means Plus Function Claim Terms 5-71
5.2.3.5.2.1 Step 2A: Identify Claim Term Function..... 5-71
5.2.3.5.2.2 Step 2B: Identify "Corresponding Structure, Material, or Acts"..... 5-72
5.2.3.5.2.3 Step 2C: "Equivalents Thereof"..... 5-72
5.2.3.5.2.4 Specific Rule for Means-Plus-Function Claims in the Computer Software Context..... 5-72
5.2.4 Dysfunctional Claims: Mistakes and Indefiniteness 5-73
5.2.4.1 Mistakes 5-73
5.2.4.2 Indefiniteness 5-74
5.3 Deference to Prior Claim Construction Rulings 5-76
5.3.1 Distinguishing Among Preclusion and Estoppel Doctrines 5-77
5.3.2 Issue Preclusion/Collateral Estoppel 5-78
5.3.2.1 Identity of Issues 5-79
5.3.2.2 Actual Litigation 5-79
5.3.2.3 Full and Fair Opportunity to Litigate 5-80
5.3.2.4 Determination Was Essential to the Final Judgment..... 5-80
5.3.2.4.1 Finality 5-80
5.3.2.4.2 Essential to the Final Judgment..... 5-83

5.3.2.5 Reasoned Deference as a Prudent Approach to Issue Preclusion 5-84
5.3.3 Judicial Estoppel 5-84
5.3.4 Stare Decisis 5-85
5.4 Practical Tips for Claim Construction 5-87
5.4.1 Recognizing and Avoiding the Pitfalls of Sound Bite and "Cite" bite Advocacy 5-87
5.4.1.1 "Heavy Presumption of Ordinary Meaning" No Longer Applies 5-87
5.4.1.2 "Presumption in Favor of Dictionary Definition" No Longer Applies 5-88
5.4.1.3 "Explicit Definition," "Disavowal," or "Disclaimer": Ordinary Meaning Versus Prosecution Disclaimer 5-88
5.4.1.4 Reliance on Extrinsic Evidence Is Permissible but Cannot Override Intrinsic Evidence 5-89
5.4.2 Checklist/Discussion Points for Claim Construction Hearing 5-90

Chapter 6. Summary Judgment
6.1 Managing the Summary Judgment Process 6-2
6.1.1 Summary Judgment and Claim Construction 6-2
6.1.2 Recommended Dual-Track Approach to Summary Judgment 6-3
6.1.2.1 First-Track Summary Judgment Motions 6-3
6.1.2.2 Second-Track Summary Judgment Motions 6-5
6.1.2.3 Implementing a Dual-Track Approach to Summary Judgment 6-6
6.1.2.4 Recognizing "First-Track" Summary Judgment Motions 6-7
6.1.3 Summary Judgment Independent from Claim Construction ("Off-Track") 6-8
6.1.4 Streamlining the Summary Judgment Process 6-8
6.1.4.1 Recommended Approach: Letter Briefs Followed by Summary Judgment Motions 6-9
6.1.4.2 Limiting the Number of Summary Judgment Motions or the Number of Pages of Summary Judgment Briefing 6-10
6.1.4.3 Multiple Rounds of Summary Judgment Hearings 6-11
6.1.5 The Summary Judgment Hearing 6-11
6.1.5.1 Length and Division of Time 6-11

6.1.5.2 Live Testimony 6-12
6.1.5.3 Graphics 6-12
6.1.5.4 Technology Tutorial 6-12
6.1.6 Expert Declarations Filed in Connection with Summary Judgment Motions 6-13
6.1.6.1 Some Expert Testimony Cannot Defeat Summary Judgment 6-13
6.1.6.1.1 Testimony About Conclusions of Law 6-13
6.1.6.1.2 Conclusory Testimony 6-13
6.1.6.1.3 Testimony Contradicting Clear Disclosure of Prior Art 6-13
6.1.6.1.4 Testimony Contradicting Admissions of a Party 6-14
6.1.6.2 Legal Insufficiency of Expert Testimony 6-14
6.1.6.3 Expert Testimony Beyond the Scope of the Expert Report 6-14
6.1.7 Narrowing Trial Issues Through Fed. R. Civ. P. 56(d) 6-15
6.2 Substantive Issues Commonly Raised During Summary Judgment 6-16
6.2.1 Issues More Amenable to Summary Judgment 6-17
6.2.1.1 Validity 6-17
6.2.1.1.1 Patentable Subject Matter 6-17
6.2.1.1.2 Obviousness 6-17
6.2.1.1.3 Anticipation 6-18
6.2.1.1.3 Indefiniteness Under § 112, ¶ 6 6-19
6.2.1.2 Infringement 6-19
6.2.1.2.1 Absence of Literal Infringement 6-19
6.2.1.2.2 Whether Infringement Under the Doctrine of Equivalents Is Barred by *Festo* 6-20
6.2.1.2.3 Whether Infringement Under the Doctrine of Equivalents Would Violate the *Wilson Sporting Goods* Doctrine 6-20
6.2.1.2.4 The Actions Accused of Infringement Did/Did Not Occur Within the United States 6-20
6.2.1.2.5 The Absence of Evidence of Direct Infringement Bars Claims of Indirect Infringement 6-21
6.2.1.2.6 "Divided" (Joint) Infringement: The Actions Accused of Infringement Are Made by Multiple Parties, Not Just the Accused Infringer 6-22

6.2.1.3 Damages 6-22
6.2.1.4 Willful Infringement 6-23
6.2.2 Issues Less Amenable to Summary Judgment 6-23
Appendix 6.1: Sample Standing Order Setting a Schedule for First-Track Summary Judgment Motions 6-15

Chapter 7. Pretrial Case Management
7.1 Pretrial Conference 7-2
7.1.1 Timing 7-2
7.1.2 Participation 7-3
7.1.3 The Pretrial Order 7-3
7.1.4 Motions at the Pretrial Conference 7-3
7.2 Trial and Disclosure Schedule 7-3
7.3 Jury Instructions 7-4
7.3.1 Preliminary Instructions 7-4
7.3.2 Final Instructions—Timing 7-5
7.3.3 Final Instructions—Substance 7-6
7.3.4 Final Instructions—Common Disputes 7-7
7.3.4.1 Integration of Case-Specific Contentions 7-7
7.3.4.2 Claim Construction Instruction 7-7
7.3.4.3 The "Presumption" of Validity Instruction 7-7
7.3.4.4 The Obviousness Instruction 7-8
7.3.4.4.1 Background: Pre-*KSR* Obviousness Law and Jury Instructions 7-9
7.3.4.4.2 Post-*KSR* Obviousness Law and Jury Instructions 7-10
7.3.4.5 Willfulness 7-11
7.3.4.6 Inducement of Infringement 7-12
7.3.4.7 Damages 7-13
7.4 Substantive Limitations on Expert Testimony 7-17
7.4.1 The Role of Experts in Patent Cases 7-17
7.4.2 Timing and Procedure: When and How Should the Court Exercise Its Gatekeeping Role? 7-18
7.4.3 Specific Substantive Limitations on Expert Testimony 7-20
7.4.3.1 Improper Subject Matter 7-20
7.4.3.1.1 State of Mind of Another Person, Usually an Inventor, Prosecutor, or Examiner 7-20

7.4.3.1.2 Matters of Law 7-21
7.4.3.2 Inadequate Qualifications 7-22
7.4.3.3 Unreliable Analysis 7-22
7.4.3.3.1 Conclusory Expert Opinions 7-23
7.4.3.3.2 Unreliability of the Methodology or Its Application 7-24
7.4.3.3.2.1 Misapplication of the *Georgia-Pacific* Factors 7-24
7.4.3.3.2.1.1 Consideration of Factors Not Specified in *Georgia-Pacific* 7-25
7.4.3.3.2.1.2 Selective Use of the *GP* Factors 7-25
7.4.3.3.2.1.3 Use of an Incorrect Date for the Hypothetical Negotiation 7-26
7.4.3.3.2.1.4 Use of Facts that Post-Date the Hypothetical Negotiation 7-26
7.4.3.3.2.2 Use of an Incorrect Base for Damages 7-28
7.4.4 Motions Seeking to Prevent Lay Witness Opinions and Expert Witness Fact Testimony 7-28
7.5 Managing Patent Trials Through Motions In Limine 7-29
7.5.1 Maintaining the Integrity of the Infringement/Validity Framework 7-29
7.5.1.1 Motion to Bar a Comparison Between the Accused Product and an Embodying Product (or Between Prior Art and an Embodying Product) 7-30
7.5.1.2 Motion to Bar Presentation of Embodying Products as Physical Exhibits 7-31
7.5.1.3 Motion to Bar Evidence that the Accused Infringer Has Patents of Its Own 7-32
7.5.1.4 Motion to Bar Argument that Patent Is Not Infringed Because It Is Invalid 7-33
7.5.2 Untimely Disclosures 7-33
7.5.2.1 Motion to Preclude Undisclosed Fact Witnesses 7-34
7.5.2.2 Motion to Preclude Undisclosed Prior Art 7-35
7.5.2.3 Motion to Preclude Untimely Expert Opinions 7-36
7.5.2.3.1 Opinions Not Disclosed in Reports 7-36
7.5.2.3.2 Affirmative Opinions Disclosed in Rebuttal Reports 7-37

7.5.2.3.3 Limit Experts to their Reports 7-37
7.5.3 Precluding Claims/Defenses 7-38
7.5.4 Miscellaneous Patent-Related Motions 7-39
7.5.4.1 Motion to Bar Evidence/Argument Inconsistent with Claim Construction 7-40
7.5.4.2 Motion to Preclude Reference to an Expert's Contrary Claim Construction Opinion 7-41
7.5.4.3 Motion to Bar Evidence/Argument About Dropped Claims/Patents 7-41
7.5.4.4 Motion to Bar Disclosure that the Patentee Seeks an Injunction 7-42
7.5.4.5 Motion to Preclude Reference to Related Proceedings in the Patent Office 7-43
7.5.4.6 Motion to Preclude Evidence Concerning Undisclosed Opinions of Counsel 7-43

Chapter 8. Trial
8.1 Procedural Issues 8-2
8.1.1 Separate Trials 8-3
8.1.1.1 Bifurcating Legal and Equitable Issues 8-3
8.1.1.1.1 When to Bifurcate 8-4
8.1.1.1.2 Use of an Advisory Jury 8-5
8.1.1.2 Separate Proceeding on Willfulness 8-6
8.1.1.3 Bifurcating Damages 8-7
8.1.1.4 Bifurcating Different Patents 8-7
8.1.1.5 Bifurcating Non-Patent Causes of Action 8-8
8.1.1.6 Bifurcating to Aid Juror Comprehension 8-8
8.1.2 Trial Logistics 8-9
8.1.2.1 Time Limits 8-10
8.1.2.1.1 Determining the Length of Trial 8-10
8.1.2.1.2 Allocation of Trial Time 8-11
8.1.2.1.2.1 Time Limits on Witness Examinations 8-11
8.1.2.1.2.2 Time Limits on Opening and Closing Statements 8-12
8.1.2.1.3 Modification of Time Limits 8-12
8.1.2.2 Procedures for the Presentation of Evidence 8-13
8.1.2.2.1 Trial Schedule 8-13

8.1.2.2.2 Order of Trial Presentations 8-15
8.1.2.2.2.1 Evidentiary and Witness Presentation 8-15
8.1.2.2.2.2 Closing Statements 8-15
8.1.2.2.2.3 Openness of Courtroom 8-16
8.1.2.3 Procedures for Managing the Jury 8-17
8.1.2.3.1 Jury Selection and Voir Dire 8-17
8.1.2.3.2 Timing of Jury Instructions 8-18
8.1.2.3.2.1 Jury Admonitions 8-19
8.1.2.3.3 Juror Binders 8-20
8.1.2.3.4 Jury Notetaking 8-21
8.1.2.3.5 Allowing Juror Questions 8-21
8.1.2.3.6 Transition Statements by Counsel to the Jury 8-22
8.1.2.3.7 Jury Education and Tutorials 8-22
8.1.2.4 Special Master, Court-Appointed Expert, or Confidential Advisors 8-23
8.2 General Evidentiary Issues 8-25
8.2.1 Witnesses 8-26
8.2.1.1 Patent Law Experts 8-26
8.2.1.2 Inventor and Other Technical Party Employee Testimony 8-27
8.2.2 Exhibits 8-28
8.2.3 Demonstratives 8-28
8.2.4 Limits on Attorney Argument 8-29
8.3 Specific Substantive Issues 8-29
8.3.1 Indirect Infringement 8-30
8.3.2 Invalidity 8-30
8.3.2.1 Presumption of Validity 8-30
8.3.2.2 Obviousness 8-31
8.3.3 Patent Damages 8-32
8.4 Motions for Judgment as a Matter of Law 8-33
8.5 Jury Deliberations 8-34
8.5.1 Schedule of Deliberations 8-34
8.5.2 Claim Construction Considerations 8-34
8.5.3 Jury Access to Evidence 8-35
8.5.3.1 Exhibits and Demonstratives 8-35

8.5.3.2 Testimony 8-35
8.5.3.3 Juror Questions During Deliberations 8-35
8.5.4 Verdict Forms 8-36
8.5.4.1 General Verdict Forms 8-36
8.5.4.2 Special Verdict Forms and Special Interrogatories 8-36
8.6 Bench Trials 8-37

Chapter 9. Post-Trial
9.1 Entry of Judgment 9-1
9.2 Post-Trial Motions 9-2
9.2.1 Permanent Injunctions 9-2
9.2.1.1 Issuing a Permanent Injunction 9-2
9.2.1.2 Ongoing Royalty After Denial of a Permanent Injunction 9-4
9.2.2 Enhanced Damages 9-5
9.2.2.1 Timing 9-5
9.2.2.2 Standard 9-6
9.2.3 Attorney Fees 9-7
9.2.3.1 Timing 9-7
9.2.3.2 Standard 9-7
9.2.4 Motion for a New Trial 9-8
9.3 Appeal 9-9
9.3.1 Stay of Injunction Pending Appeal 9-9
9.3.2 Remands 9-10
9.3.3 Renewed Motion for Judgment as a Matter of Law 9-12

Chapter 10. ANDA Cases: Patent Infringement Actions Involving FDA-Approved Drugs Under the Hatch-Waxman Act
10.1 Hatch-Waxman Act Statutory Scheme 10-1
10.1.1 Abbreviated New Drug Applications (ANDA) 10-2
10.1.2 180-Day Exclusivity Period 10-3
10.2 The Hatch-Waxman Act's Impact on Patent Litigation 10-3
10.2.1 Subject-Matter Jurisdiction in ANDA Cases 10-4
10.2.1.1 Jurisdiction Over Patent Infringement Actions Pursuant to 35 U.S.C. § 271(e)(2) 10-4
10.2.1.2 Declaratory Judgment Jurisdiction 10-4

10.2.1.2.1 Declaratory Judgment Actions by First ANDA Filers 10-5
10.2.1.2.2 Declaratory Judgment Actions by Subsequent ANDA Filers 10-5
10.2.2 Case Management Scheduling and Timing of Judgment 10-6
10.2.2.1 District of New Jersey Local Patent Rules 10-7
10.2.3 Settlement of Hatch-Waxman Patent Infringement Lawsuits 10-9
10.2.3.1 Reverse Payments 10-9
10.2.3.1.1 Antitrust Issues and Reverse Payments 10-10

Chapter 11. Patent Law Primer
11.1 The Patent 11-4
11.1.1 The Patent Document 11-4
11.1.1.1 The First Page—Administrative Details 11-6
11.1.1.2 Drawings 11-6
11.1.1.3 The Specification 11-6
11.1.1.3.1 Claims 11-7
11.2 Patent Prosecution and the Patent Lifecycle 11-8
11.2.1 Institutional Aspects 11-8
11.2.1.1 The Patent Office 11-8
11.2.1.2 The Patent Bar 11-9
11.2.1.3 The Board of Patent Appeals and Interferences 11-9
11.2.1.4 Laws Governing the PTO and the MPEP 11-10
11.2.2 Filing a Patent Application 11-10
11.2.2.1 Overview of Patent Examination 11-10
11.2.2.2 The Application 11-11
11.2.2.2.1 Elements of a Non-Provisional Patent Application 11-12
11.2.2.2.2 Prior Art Disclosure—Information Disclosure Statement 11-12
11.2.2.2.3 Priority Date 11-12
11.2.2.2.4 Non-Standard Applications 11-12
11.2.2.3 Restriction Requirements and Divisional Applications 11-13
11.2.2.4 Publication 11-13
11.2.3 The Prosecution History or "File Wrapper" 11-14

11.2.3.1 Office Actions 11-14
11.2.3.1.1 Affidavits 11-14
11.2.3.1.2 Interview Report 11-15
11.2.3.2 Continuation Applications 11-15
11.2.3.3 Continuation-in-Part Applications 11-15
11.2.3.4 PTO Petition and Appeals 11-16
11.2.4 Patent Duration 11-16
11.2.4.1 Patent Term Adjustments 11-17
11.2.4.2 Patent Term Restoration 11-17
11.2.5 Post-Issuance Corrections 11-17
11.2.5.1 Disclaimers 11-18
11.2.5.2 Correction 11-18
11.2.5.3 Reissue 11-18
11.2.5.3.1 Narrowing Reissues 11-19
11.2.5.3.2 Broadening Reissues 11-20
11.2.5.3.2.1 The Recapture Rule 11-20
11.2.5.3.2.2 Intervening Rights 11-20
11.2.5.4 Reexamination 11-22
11.2.5.4.1 Ex Parte Reexamination 11-22
11.2.5.4.2 Inter Partes Reexamination 11-24
11.2.5.5 Reissue Versus Reexamination 11-24
11.2.6 The Presumption of Validity 11-26
11.3 Validity 11-26
11.3.1 Patentable Subject Matter (§ 101) 11-26
11.3.1.1 Isolated and Purified Natural Substances (Including DNA Sequences) 11-28
11.3.1.2 Computer Software 11-28
11.3.1.3 Business Methods 11-29
11.3.2 Utility (§ 101) 11-31
11.3.3 Disclosure (§ 112) 11-32
11.3.3.1 Written Description 11-32
11.3.3.1.1 Policing Continuation Practice 11-33
11.3.3.1.2 Biotechnology Patents 11-33
11.3.3.2 Enablement 11-34
11.3.3.3 Best Mode 11-35

11.3.3.4 Claim Definiteness 11-36
11.3.4 Novelty and Statutory Bars (§ 102) 11-36
11.3.4.1 First to Invent—§ 102(a) 11-38
11.3.4.1.1 "Known or Used" 11-38
11.3.4.1.2 Printed Publication 11-38
11.3.4.2 Novelty—First to Invent—§ 102(g) 11-39
11.3.4.2.1 Conception 11-40
11.3.4.2.2 Reduction to Practice 11-41
11.3.4.2.3 Reasonable Diligence 11-41
11.3.4.2.4 Abandoned, Suppressed, or Concealed 11-41
11.3.4.2.5 Section 102(g)—Summary 11-42
11.3.4.3 Novelty—"Secret Prior Art"—§ 102(e) 11-42
11.3.4.4 Novelty—Derivation—§ 102(f) 11-43
11.3.4.5 Statutory Bars—Timely Filing—§ 102(b) 11-43
11.3.4.5.1 Experimental Use 11-44
11.3.4.5.2 On Sale Bar 11-44
11.3.4.6 Statutory Bars—Abandonment—§ 102(c) 11-45
11.3.4.7 Statutory Bars—International Filing—§ 102(d) 11-45
11.3.5 Nonobviousness—§ 103 11-46
11.3.5.1 Historical Development 11-46
11.3.5.2 Nonobviousness Standard 11-46
11.3.5.3 Applying § 103 11-47
11.3.5.3.1 Determining the Level of Ordinary Skill in the Art 11-47
11.3.5.3.2 Scope and Content of the Prior Art 11-49
11.3.5.3.3 Differences Between Invention and Prior Art 11-50
11.3.5.3.4 Secondary Considerations 11-50
11.3.5.3.4.1 Long-Felt Need and Failure by Others 11-51
11.3.5.3.4.2 Awards and Praise 11-51
11.3.5.3.4.3 Skepticism, "Teaching Away," and Unexpected Results 11-51
11.3.5.3.4.4 Licensing Activity 11-52
11.3.5.3.4.5 Copying 11-52
11.3.5.3.4.6 Commercial Success 11-52
11.3.5.3.5 The Ultimate Conclusion and Combining References 11-53

11.3.6 Inventorship 11-54
11.3.6.1 Inventive Entities 11-54
11.3.6.2 Default Rights of Owners 11-55
11.3.6.3 Correction of Inventorship 11-55
11.4 Enforcement: Infringement, Defenses, and Remedies 11-55
11.4.1 Infringement 11-56
11.4.1.1 Section 271 11-56
11.4.1.2 Direct Infringement 11-56
11.4.1.3 Indirect Infringement 11-56
11.4.1.3.1 Inducement 11-56
11.4.1.3.2 Contributory Infringement 11-57
11.4.1.3.3 Joint Infringement 11-57
11.4.1.4 Infringement Analysis 11-58
11.4.1.4.1 Literal Infringement 11-58
11.4.1.4.1.1 Interpreting the Literal Scope of Means-Plus-Function Claims (§ 112, ¶ 6) 11-58
11.4.1.4.1.1.1 Determining Whether a Claim Limitation Is Governed by § 112, ¶ 6 11-59
11.4.1.4.2 Non-Literal Infringement—The Doctrine of Equivalents 11-59
11.4.1.4.2.1 Limiting Principles 11-60
11.4.1.4.2.1.1 The All-Elements (All-Limitations) Rule 11-61
11.4.1.4.2.1.1.1 Claim Vitiation 11-61
11.4.1.4.2.1.2 Prosecution History Estoppel 11-61
11.4.1.4.2.1.2.1 Specific Exclusion 11-63
11.4.1.4.2.1.3 Prior Art Rule 11-63
11.4.1.4.2.1.4 The Public Dedication Rule 11-64
11.4.1.4.2.2 Interpreting the Non-Literal Scope of Means-Plus-Function Claims 11-64
11.4.1.4.3 The Reverse Doctrine of Equivalents 11-65
11.4.1.5 Extraterritorial Infringement 11-66
11.4.1.5.1 Manufacturing Components Within the United States for Assembly Abroad—§ 271(f) 11-66
11.4.1.5.2 Importing Products Made Using Patented Processes—§ 271(g) 11-67

11.4.2 Defenses 11-67
11.4.2.1 Non-infringement 11-67
11.4.2.2 Absence of Liability 11-67
11.4.2.2.1 Consent or License 11-68
11.4.2.2.1.1 First Sale Doctrine/Exhaustion Principle 11-68
11.4.2.2.1.2 Shop Right 11-68
11.4.2.2.2 Experimental Use Defense 11-69
11.4.2.2.3 Prior Use Right 11-70
11.4.2.2.4 Bar Against Remedies for Infringement of Medical Procedure Patents by Doctors and Hospitals 11-70
11.4.2.2.5 Sovereign Immunity 11-70
11.4.2.3 Unenforceability 11-71
11.4.2.3.1 Inequitable Conduct 11-71
11.4.2.3.2 Patent Misuse 11-72
11.4.2.3.3 Equitable Estoppel 11-73
11.4.2.3.4 Laches 11-73
11.4.2.3.4.1 Prosecution Laches 11-74
11.4.2.4 Invalidity 11-74
11.4.2.4.1 Double Patenting 11-75
11.4.2.4.1.1 Statutory or Same Invention 11-75
11.4.2.4.1.2 Non-Statutory or Obvious-Type 11-76
11.4.2.5 Antitrust Counterclaims 11-76
11.4.3 Remedies 11-77
11.4.3.1 Injunctive Relief 11-77
11.4.3.1.1 Preliminary Injunction 11-77
11.4.3.1.2 Permanent Injunction 11-78
11.4.3.2 Monetary Damages 11-78
11.4.3.2.1 Compensatory Damages 11-79
11.4.3.2.1.1 Lost Profits 11-79
11.4.3.2.1.2 Convoyed Sales 11-79
11.4.3.2.1.3 Price Erosion 11-80
11.4.3.2.1.4 Reasonable Royalty 11-80
11.4.3.2.1.5 Marking Requirements 11-82

11.4.3.2.2 Enhanced Damages 11-83
11.4.3.2.3 Prejudgment Interest 11-84
11.4.3.3 Costs 11-84
11.4.3.4 Attorney Fees 11-84
11.5 Appeals and Parallel Litigation 11-85
11.5.1 Appeals to the Federal Circuit 11-85
11.5.1.1 Appellate Jurisdiction 11-85
11.5.1.2 Choice of Law 11-85
11.5.1.3 Interlocutory Appeals 11-87
11.5.2 Parallel Litigation Forums 11-87
11.5.2.1 International Trade Commission 11-88
11.5.2.2 Patent Office Reexamination 11-88
11.5.2.3 Other District Courts and MDL Proceedings 11-88
11.5.2.4 Foreign Courts 11-89

Appendix A: Glossary
Appendix B: Acronyms
Appendix C: Patent Resources
Appendix D: Patent Local Rules and Standing Orders
Northern District of California (2008)
District of New Jersey (2008)
Appendix E: Model Patent Jury Instructions
Northern District of California (2007)
Author Biographies
Table of Cases
Index

Foreword

This judicial guide on patent case management is a collaborative effort between the Federal Judicial Center and the Berkeley Center for Law & Technology of the University of California–Berkeley School of Law. This collaboration began in 1998 when the Berkeley Center and the Judicial Center conducted their first intellectual property seminar for judges. That seminar was structured to provide district judges with a background and understanding of the many areas of intellectual property law. From that initial program has evolved an annual intellectual property seminar for judges at the Berkeley Center as well as a range of innovative intellectual property programs at the Federal Judicial Center's national and local workshops.

Then and now, the driving force behind these judicial education efforts in intellectual property has been Professor Peter Menell, director of the Berkeley Center. Building on the enormous success of these programs, Professor Menell approached the Judicial Center several years ago with the idea of collecting materials on patent case management that had been compiled for the intellectual property seminars. With coauthors Lynn Pasahow, James Pooley, and Matthew Powers along with the assistance of a distinguished group of collaborators and advisors, Professor Menell prepared this comprehensive guide. I believe this guide will be a valuable aid to judges handling the complex arena of patent cases

BARBARA J. ROTHSTEIN
U.S. District Judge
Director, Federal Judicial Center

Preface

As the number, size, and complexity of patent cases have grown throughout the United States over the past several decades—paralleling expansion in the role of high technology enterprises in the U.S. economy—the need for a comprehensive, user-friendly, and practical judicial guide for managing patent cases has become increasingly apparent. Although similar in many respects to other forms of complex civil litigation, patent cases pose distinctive case-management challenges. Patent cases feature complex and dynamic technological facts to a degree rarely encountered in most other areas of litigation. Furthermore, they employ unique procedures (such as claim construction hearings) that affect and interact with other aspects of the case (such as summary judgment motions and expert reports) in ways that create unusual scheduling and substantive complexity. In addition, patent cases often entail distinctive and difficult discovery issues, extensive use of experts, and particularly complex dispositive and pretrial motion practice.

Because of the decentralized, general jurisdiction structure of federal courts in the United States, much of the experience relating to managing patent cases is siloed in particular judicial chambers. As one jurist aptly noted, best practices for patent case management have been transmitted largely through word of mouth. Given the crowded, diverse dockets of federal courts, the accessibility and reliability of such knowledge is far from ideal. Judges in some districts have partially codified recommended practices in the form of Patent Local Rules, standing orders, and patent jury instructions, but these documents do not address the full range of distinctive challenges posed by patent litigation. Furthermore, such judicial wisdom continues to evolve.

Recognizing these patterns, the authors undertook in 2006 to survey the range of approaches and perspectives on patent case management, foster discussion and analysis of patent case management techniques, and develop an authoritative guide for judges, law clerks, practitioners, and patent and civil procedure professors and scholars. This project grew out of an annual series of intellectual property education programs that Professor Peter Menell has organized since 1998 for the Federal Judicial Center. It began by collecting available materials relating to patent case management and constructing a comprehensive outline. Over the next year, the team drafted, revised, and edited the principal chapters of the guide. They first vetted a draft at the FJC intellectual property conference in June 2007. They then undertook a substantial revision of the manuscript. Between December 2007 and August 2008, the authors met with district judges and magistrate judges in the most active patent jurisdictions around the nation—the Northern District of California, the Central District of California, the District of Delaware, the Northern District of Illinois, the District of New Jersey, the Southern District of New York, the Eastern District of Texas, and the Eastern District of Virginia—as well as the Federal Circuit to discuss the overall project and refine the specific case-management recommendations.

Such sessions explored the range of practices and honed the best practices set forth in this Guide. The authors also assembled an advisory board of leading patent litigators and academics to provide input on the project.

Given the dynamism of the patent system and patent litigation, the authors plan to revise the guide on a biennial basis.

Acknowledgments

This project could not have reached fruition without the support and encouragement of the Federal Judicial Center and the Berkeley Center for Law & Technology. We are especially grateful to the many federal judges, practitioners, and professors who have provided insights and guidance on patent case management. We thank James Morando and Ted Sichelman for detailed comments on the manuscript; Ashley Doty, Blake Greene, Tamar Gubins, David Haskel, Justin Lee, Will McGinty, Hersh Reddy, and Jeff Thomas for excellent research assistance; David Grady and Jennifer Zahgkuni for their assistance in editing and formatting the guide; and Laura Rochelois and the studio of By Design Legal Graphics for their assistance with figure illustrations. We owe a special debt of gratitude to David Marshall at the FJC for his tireless efforts to produce the final manuscript.

JUDICIAL ADVISORY BOARD

Hon. Garrett E. Brown, Jr.
Chief Judge
District of New Jersey

Hon. David J. Folsom
District Judge
Eastern District of Texas

Hon. Faith S. Hochberg
District Judge
District of New Jersey

Hon. James Holderman
Chief Judge
Northern District of Illinois

Hon. Elizabeth D. Laporte
Magistrate Judge
Northern District of California

Hon. Richard Linn
Circuit Judge
Court of Appeals for the Federal Circuit

Hon. Paul R. Michel
Chief Judge
Court of Appeals for the Federal Circuit

Hon. Katherine M. O'Malley
District Judge
Northern District of Ohio

Hon. Robert E. Payne
District Judge
Eastern District of Virginia

Hon. Loretta A. Preska
District Judge
Southern District of New York

Hon. Randall R. Rader
Circuit Judge
Court of Appeals for the Federal Circuit

Hon. Patti B. Saris
District Judge
District of Massachusetts

Hon. Gregory M. Sleet
Chief Judge
District of Delaware

Hon. T. John Ward
District Judge
Eastern District of Texas

Hon. Ronald M. Whyte
District Judge
Northern District of California

Hon. Claudia Wilkin
District Judge
Northern District of California

PRACTITIONER AND ACADEMIC ADVISORY BOARD

Kenneth R. Adamo
Jones Day

Morgan Chu
Irell & Manella, LLP

John M. Desmarais
Kirkland & Ellis, LLP

William F. Lee
WilmerHale

Mark A. Lemley
Stanford University,
Durie Tangri Page Lemley
Roberts & Kent LLP

Hon. Roderick R. McKelvie
Covington & Burling, LLP

Mike McKool, Jr.
McKool Smith

Robert P. Merges
Berkeley Center for Law & Technology,
University of California, Berkeley

George F. Pappas
Covington & Burling, LLP

Gregory P. Stone
Munger, Tolles & Olson, LLP

Chapter 1
General Principles for Effective Patent Case Management

1.1 Purposes of the Patent System
1.2 A Preliminary Note About Settlement of Patent Cases

District court judges have extensive experience managing a wide range of complex litigation. Furthermore, multi-volume treatises and law review articles comprehensively examine the substance of patent law. This guide does not attempt to replace either body of wisdom. Rather, it fills an important gap—the lack of any specialized and systematic treatment of the judicial management of patent litigation. Patent cases present distinctive management challenges and thus can benefit from a comprehensive framework of principles and methods tailored to contemporary practices. In addition to featuring complex and dynamic technological facts to a degree rarely encountered in most other areas of litigation, patent cases employ unique procedures (such as claim construction hearings) that affect and interact with other aspects of the case (such as summary judgment motions and expert reports) in a way that creates unusual scheduling and substantive complexity. In addition, difficult discovery issues that commonly arise in patent cases, including patent-specific privilege and waiver questions, require great care in resolution and are more likely to substantially affect the outcome of the litigation than more typical discovery disputes. The number of potentially dispositive issues (both legal and equitable) makes patent case management particularly challenging.

This guide is primarily intended to be a resource for district court judges in addressing these issues. It combines the collective experience of leading patent attorneys and jurists from hundreds of patent cases and dozens of trials and reflects a balanced perspective of both patent holders and accused infringers. It avoids a formulaic approach—the rich variety of cases and the benefits of the exercise of informed judgment and discretion of district court judges require flexibility. Therefore, this guide provides district court judges with a range of options for the most common issues and guidance as to which factors may make particular options preferable in certain situations. It also includes draft orders and exemplar case-management documents to illustrate case-management tools and strategies. It emphasizes and places in perspective those issues of greatest importance to trial courts. Jurists should, of course, consult statutory materials, case law, and patent law treatises on the more technical issues of statutory construction and jurisprudence. Our goal is to provide background and perspective for surmounting the challenges of patent case management.

1.1 Purposes of the Patent System

Before turning to the details of patent case management, it is worthwhile to reflect on the sources and the purposes guiding the evolution of the patent system as this bears directly on the exercise of a court's discretion in resolving patent disputes. In Article I, § 8, Clause 8 of the Constitution, the Founders authorized Congress to enact laws "To promote the Progress of Science and useful Arts, by securing for limited Times to Authors and Inventors, the exclusive Right to their respective Writings and Discoveries." Congress enacted the first patent law soon after the nation was formed, declaring that anyone who had "invented or discovered any useful art, manufacture, engine, machine, or device, or any improvement therein not before known or used" shall have "the sole and exclusive right and liberty of making, constructing, using and vending to others to be used" for a term not to exceed fourteen years. Although revised by Congress on several occasions over the next two centuries, this rather terse formulation has remained the core of the patent system. Court decisions stretching back to the early to mid nineteenth century form an important source for patent law even today.

Therefore, it is useful to understand the principles and policies undergirding the patent system. The most basic of these is the constitutional purpose: "To Promote Progress of . . . useful Arts." Patent law represents an important exception to the free market system on which the United States of America was built. The Founders were skeptical of government-bestowed privileges and monopolies. But they recognized that without protection against unauthorized imitation, many inventors would lack adequate *incentives* to invest their resources and labors in inventive activities because second-comers could easily imitate successful discoveries without incurring the risk and cost of innovation. Patent law was enacted to ensure that those who make significant inventive contributions receive a reward that is at least commensurate with the costs of inventive activity.

Yet the Founders believed the ultimate beneficiary of such efforts should be the public, and thus imposed upon Congress the restraint that patents be available for only "limited Times"—roughly calibrated to the amount of lead time necessary to recoup the inventor's investment adjusted for risk. In effect, the original term of fourteen years, borrowed from the English patent system, was double the seven-year term of trade guild apprenticeships dating back to the Middle Ages. Various other doctrines—such as the nonobviousness standard, infringement tests, statutory and judge-made defenses, the patent misuse doctrine, and remedy provisions—seek to ensure that the reward to the patentee is not disproportionate to the public benefit.

A related principle of patent law is the notion that the patent represents a bargain between the inventor and the public. The public affords the patentee exclusive rights to prevent others from making, using, or selling the invention in exchange for fully and forthrightly disclosing the invention. In this way, the public

can practice the invention following the patent's expiration and learn from the knowledge disclosed even during the term of the patent. Thus, U.S. patent law requires a sufficient disclosure to ensure that the inventor "possessed" the claimed invention and to enable others to build or use it. This quid pro quo serves to promote progress by spurring cumulative innovation—enabling subsequent inventors to stand on the shoulders of their predecessors.

A related aspect of the patent system is that patents should provide the public (including potential competitors and inventors) adequate *notice* of the boundaries of patent claims so that they can pursue competing projects without undue fear of encroaching upon the patentee's exclusive rights. In some areas of technology, this principle is especially difficult to apply due to the inherent ambiguity of language. Unlike the metes and bounds of real property deeds—which can be objectively assessed by trained land surveyors—patent claims rarely offer perfect precision. Advances in technology further complicate the delineation of patent boundaries. Courts have long sought to balance the incentive and notice purposes of the patent law. Requirements of clear and definite claiming further the notice goal, but this general concern also comes into play in several areas of patent law—such as determining the standards for non-literal infringement where the much debated "doctrine of equivalents" serves as a fulcrum for effectuating the incentives/notice balance.

Applying these principles in a complex patent dispute can be a challenging task. This guide seeks to rationalize and systematize the process of managing patent cases. Although many aspects of the patent statute are quite technical, it is important to recognize that patent adjudication involves many doctrines that demand the exercise of discretion. These larger purposes of the patent system provide the touchstone for jurists in making their decisions.

1.2 A Preliminary Note about Settlement of Patent Cases

Patent litigation is expensive. According to survey statistics, each side can expect to spend several million dollars in fees through trial in the simplest, single-patent case. The high cost reflects in part the high stakes involved. For most businesses, this potential risk, coupled with the unpredictability of juries deciding complex technical questions, means that exploring settlement should be an imperative. Indeed, like other litigation, the vast majority of patent cases (more than 95%) ultimately resolve before trial—most through settlement and just under 10% through summary judgment rulings. But the timing of settlement varies widely. Approximately 30% of patent cases resolve before any court actions; approximately half resolve early in case management; and approximately 15% during or after pretrial proceedings. *See* FTI Consulting, Intellectual Property Statistics (May 2008) (based on data gathered by the Administrative Office of the U.S.

Courts). Table 1.1 shows the median cost of resolving patent cases through the end of discovery and trial.

Table 1.1
Median Patent Litigation Costs: 2007

Amount at Risk	Through End of Discovery	Through End of Trial
Less than $1 million	$350,000	$600,000
$1 million to $25 million	$1,250,000	$2,500,000
Over $25 million	$3,000,000	$5,000,000

Source: American Intellectual Property Law Association, Report of Economic Survey, 2007

Thus, early resolution offers substantial savings to the parties and the court in terms of resources and time. What are the impediments to earlier resolution, and what part can the district judge play to encourage it? Although we address this issue in detail in § 2.6, it is worthwhile highlighting key considerations for the outset of patent litigation.

The first barrier to settlement may be the relationship of the parties. For example, if the patent holder is not an operating entity but only holds its patents for assertion against potential infringers, it puts at risk only the patents-in-suit and the cost of the litigation and faces no possibility of field-leveling counterclaims. For the defendant company accustomed to resolving disputes with competitors through compromise, this asymmetrical situation can lead to standoff. Just as challenging, for different reasons, is the case involving head-to-head competitors for whom litigation may be just another marketplace strategy. And finally there are the lawyers, whom some judges find to be unusually combative in patent cases.

The most effective approaches to settlement, therefore, require judicial intervention, early and often. This typically begins at the first case-management conference, where the court can relieve counsel (or one of them) of their natural reluctance to address the issue, making it clear that cooperation and frequent reports on settlement are considered just as important as other aspects of case management. The type of process (e.g., early neutral evaluation, outside mediation, magistrate judge conference) and date for completion of the first phase should be set at this stage. The court should express willingness to order in-person attendance by appropriate executives. To the objection that discovery will have to come first, the court should make clear that any information reasonably necessary to assess each side's position should be exchanged promptly. To the objection that settlement cannot usefully proceed until the court has construed the asserted claims, the court should point out that uncertainty often drives settlement and early discussions will likely hasten the settlement process.

The best time for settlement is often at the outset of litigation, before vast amounts of time and resources are expended and positions harden. Apart from that, mediation can be most effective (a) after some initial discovery (when each side has presumably learned more about the merits), (b) just after a pivotal event, such as a claim construction order, or a ruling on a preliminary injunction request or on summary judgment motions, or (c) just before such a high-risk pretrial event, or just before trial itself (keeping in mind Samuel Johnson's oft-quoted observation that "when a man knows he is to be hanged in a fortnight, it concentrates his mind wonderfully").

Table 2.7 provides a practical guide for understanding the underlying dynamics and pertinent settlement issues with regard to the most common types of patent disputes:

- competitor versus competitor (regarding core technology)
- competitor versus competitor (non-core technology)
- large enterprise versus start-up/new entrant
- licensing company versus large enterprise
- licensing company versus start-up enterprise
- pharmaceutical versus pharmaceutical
- patent owner versus first alleged infringer (serial litigant)
- pharmaceutical versus generic
- medical device industry
- preliminary injunction motion

Here is a summary of general ways a district court can effectively encourage settlement of patent litigation:

1. Make clear to counsel that settlement is a process, not an event, and that it is extremely important to the court.
2. Get the settlement process moving early, dealing with objections that might delay it. Appoint a mediator with experience in resolving patent disputes (this does not necessarily mean a patent lawyer).
3. Require frequent reports on the status of settlement efforts, requiring multiple mediation sessions if necessary.

Chapter 2
Early Case Management

2.1 Patent Litigation Timelines and Specialized Local Rules
2.1.1 Managing Claim Construction
2.1.1.1 Claim Construction Briefing and Oral Argument
2.1.1.2 Claim Construction and Discovery
2.1.1.2.1 Discovery Prior to Claim Construction
2.1.1.2.2 Fact Discovery After Claim Construction
2.1.1.2.3 Expert Discovery After Claim Construction
2.1.1.3 Unless Claim Construction Clearly Will Control the Outcome, It Should Precede Summary Judgment
2.1.1.4 Claim Construction May Encourage Settlement
2.1.1.5 Preliminary Injunction Motions Usually Require Preliminary Claim Construction
2.1.2 Managing the Parties' Claims, Defenses and Counterclaims: Patent Local Rules
2.2 Complaint and Answer
2.2.1 Plaintiff Standing Requirements
2.2.1.1 Infringement Plaintiff
2.2.1.1.1 Infringement Plaintiff Must Hold All Substantial Patent Rights
2.2.1.1.2 Plaintiff Must Join All Joint Patent Owners
2.2.1.1.3 An Exclusive Licensee Must Sometimes Join Its Licensor
2.2.1.1.4 A Nonexclusive Licensee Has No Standing to Sue
2.2.1.1.5 Patentee Can Only Convey Right to Sue by Transferring Substantially All Patent Rights
2.2.1.1.6 Standing Motions Result in Dismissal Without Prejudice
2.2.1.2 Declaratory Judgment Plaintiff
2.2.1.2.1 Defendant's Declaratory Judgment Counterclaims Are Not Mooted by Dismissal of Plaintiff's Infringement Claims
2.2.1.2.2 Assignor Is Estopped From Seeking Declaratory Judgment of Invalidity
2.2.1.2.2.1 Parties in Privity with Assignor Are also Estopped
2.2.1.2.3 Actual Case or Controversy Can Exist for Licensee in Good Standing Even in Absence of Material Breach
2.2.2 Defendant Standing Requirements
2.2.2.1 Infringement Defendants
2.2.2.2 Declaratory Judgment Defendants
2.2.3 Pleading
2.2.3.1 Infringement
2.2.3.2 Willful Infringement
2.2.3.2.1 Opinions of Counsel
2.2.3.2.2 Privilege Issues Relating to Opinions of Counsel
2.2.3.3 Defenses
2.2.3.3.1 Invalidity Defenses
2.2.3.3.2 Unenforceability Defenses
2.2.3.3.2.1 Inequitable Conduct Pled with Particularity
2.2.3.3.2.2 Privilege Issues Relating to Unenforceability
2.2.4 Counterclaims
2.2.4.1 Compulsory Counterclaims
2.2.4.2 Non-Compulsory Counterclaims
2.2.5 Potential Overlap with Non-Patent Claims; Choice of Law
2.2.6 Interaction with Other Types of Actions
2.2.6.1 Bankruptcy
2.2.6.2 International Trade Commission Actions
2.2.6.3 PTO Actions—Re-examination and Re-issue
2.2.7 Rule 11: Pre-Suit Investigations—Objective Good Faith Basis for Filing Pleading

2.3 Jurisdiction and Venue
2.3.1 Personal Jurisdiction
2.3.2 Subject-Matter Jurisdiction
2.3.2.1 Original Jurisdiction
2.3.2.2 Supplemental Jurisdiction
2.3.3 Venue
2.3.3.1 Venue Transfer Motions
2.3.4 Multidistrict Coordination
2.4 Scheduling
2.5 Case Management Conference
2.6 Settlement and Mediation
2.6.1 Initiation of the Mediation Process
2.6.2 Selection of the Mediator
2.6.3 Scheduling the Mediation
2.6.4 Powers of the Mediator and Who Should Be Present During Mediation
2.6.5 Confidentiality of the Mediation
2.6.6 Relationship of the Mediation to the Litigation Schedule
2.6.7 Mediating Multi-Party and Multi-Jurisdictional Cases
2.6.8 Factors Affecting the Likelihood of Settlement of Particular Categories of Cases
Appendix 2.1 Scheduling Order, Eastern District of Texas
Appendix 2.2 Draft Advisory Statement
Appendix 2.3 Protective Order, Eastern District of Texas
Appendix 2.4(a) Mediation Evaluation Form for Attorneys, Northern District of Illinois
Appendix 2.4(b) Mediation Evaluation Form for Mediators, Northern District of Illinois
Appendix 2.4(c) Mediation Evaluation Form for Parties, Northern District of Illinois

Without close management, patent cases can consume a vastly disproportionate amount of court and staff time. High stakes often result in extensive, contentious motion practice. Keys to success lie in early establishment of a case schedule and procedures for streamlining resolution of common issues, as well as creative approaches to settlement. Discovery requires special attention; it will be treated separately in Chapter 4. However, discovery challenges (anticipating and avoiding them) are connected with many of the pretrial issues confronted by district courts.

This chapter examines pretrial case management. We begin with a review of typical timelines and specialized local rules from jurisdictions that have found them useful in handling a large number of patent cases. For courts outside these districts, these approaches will still be helpful in understanding the management choices available.

We then describe the specific issues typically faced in connection with the pleadings, including jurisdiction and venue, standing, declaratory judgment, special patent defenses (such as inequitable conduct and assignor estoppel), and common associated claims such as antitrust violations. The initial case management conference will be addressed, with particular attention to scheduling choices and their consequences. We consider the multi-patent "mega case," processes for identifying (and narrowing) infringement and invalidity contentions, and whether and how to schedule a *Markman* hearing to determine what the patent claims mean. We revisit the latter issues in detail in Chapter 5.

We cover some of the more common early motions, such as a motion for stay pending re-examination of the patent by the PTO, and motions directed at managing the issue of willful infringement, which is frequently asserted and is a predicate for an award of enhanced damages and attorneys' fees. We also consider in some detail the critical process of encouraging agreed resolution through mediation.

2.1 Patent Litigation Timelines and Specialized Local Rules

A patent case is, in many senses, like any other case. The plaintiff files a complaint alleging infringement. The defendant answers, alleging non-infringement and asserting various defenses, and potentially makes counterclaims of its own. The parties proceed to fact and expert discovery, motion practice, pretrial briefing, and trial. As in any litigation, the time necessary for each pretrial phase varies with the complexity of and potential impact from the issues presented.

However, there are certain unique aspects of patent litigation, the management of which will significantly affect the pretrial timeline. Key among these is the management of claim construction and the parties' myriad claims, defenses, and counterclaims.

2.1.1 Managing Claim Construction

In almost every patent case, the court must construe the claims of the patent so that the court, the parties, and ultimately the jury understand the characteristics and scope of the claimed invention. For the court, claim scope can be a predicate to a number of pretrial issues, including summary judgment; and for the jury, it is essential to determining validity and infringement. The claim construction process arises out of the requirement in the seminal *Markman* decision that the district court resolve the meaning of patent claim terms as a matter of law. *Markman v. Westview Instruments, Inc.*, 52 F.3d 967, 979 (Fed. Cir. 1995) (en banc), *aff'd*, 517 U.S. 370 (1996). Substantive issues relating to claim construction, and issues related to the conduct of the hearing, are addressed in Chapter 5. This section addresses claim construction as a part of overall case management.

A sensible approach to defining claims entails these steps: (1) the parties identify disputed, relevant claim terms (that is, those projected to have an impact on case outcome); (2) the parties argue their positions on the meaning of the claim terms; and (3) the court construes the claim terms and issues a claim construction order. Most often this is handled as a separate process in advance of summary judgment motions, but it can also be done as part of the briefing on summary judgment, particularly when claim construction may be outcome determinative. (Section 6.1.1 discusses these options.) The details of a stand-alone claim construction process may be managed by the court in a variety of ways. Chart 2.1 summa-

rizes the practical advantages and disadvantages of the most common approaches to claim construction.

Chart 2.1
Advantages and Disadvantages of the Most Common Approaches to Claim Construction

	Strategy	Advantages	Disadvantages
Identification of disputed claim terms	Parties jointly identify claim terms to be construed.	May help narrow disputed terms.	Requirement to confer may extend time required for claim construction.
Submission of joint statement of proposed constructions	Parties submit joint claim construction statement providing each side's proposed constructions.	May identify claim terms that can be eliminated because there is no substantial dispute as to meaning.	Extra submission may extend time required for claim construction.
Briefing	Court limits number of terms it will construe.	May help focus issues.	Although "district courts are not (and should not be) required to construe *every* limitation present in a patent's asserted claims", they must interpret the scope of any claim term for which the parties have presented a "fundamental dispute." *O2 Micro Int'l Ltd. v. Beyond Innovation Tech. Co., Ltd.*, 521 F.3d 1351, 1362 (Fed. Cir. 2008) (emphasis in original). See §§ 5.1.4.3, 5.2.3.1.

2.1.1.1 Claim Construction Briefing and Oral Argument

Some courts routinely utilize a *Markman* briefing coupled with a hearing that may include witnesses. Other courts do not hold a *Markman* hearing unless they

determine from briefing that it would be helpful, such as when the experts sharply diverge on the perspective of a person of ordinary skill in the art. Many courts find it useful to have the parties first present a technology tutorial, setting context for the arguments to follow. Some courts will let the relevant claim terms emerge in briefing, while others do more to encourage the parties to reach agreement in advance on a set of disputed terms, for example by requiring submission of joint claim construction statements. *See* N.D. Cal. Patent L.R. 4-3. A district judge has broad discretion in the management of the claim construction process, and that discretion is reflected in the variety of mechanisms that different courts have used. A court's decisions about claim timing and process should, however, consider the interrelation of claim construction with other aspects of pretrial process, particularly discovery, summary judgment, and settlement.

2.1.1.2 Claim Construction and Discovery

2.1.1.2.1 Discovery Prior to Claim Construction

As discussed further in Chapter 5, claim construction is based on the patent claims, specification, and prosecution history and on extrinsic evidence to show what patent claim terms would have meant to a person skilled in the art. In theory, therefore, discovery relating to the structure and function of accused devices or a patent holder's own products might seem unnecessary. *See SRI Int'l v. Matsushita Elec. Corp. of Am.*, 775 F.2d 1107, 1118 (Fed. Cir. 1985) (en banc). However, it is only by knowing the details of the accused product that the parties are able to determine which claim terms need construction; otherwise, the court might be asked to provide definitions for hundreds of words and phrases in the abstract. Likewise, an inventor's testimony as to what a patent means is typically seen as irrelevant, particularly when it is offered in a self-serving way; it can, however, be quite influential if against the inventor's own interest. *Markman v. Westview Instruments, Inc.*, 52 F.3d 967, 983 (Fed. Cir. 1995) (en banc), *aff'd*, 517 U.S. 370 (1996); *but see Voice Techs. Group, Inc. v. VMC Sys., Inc.*, 164 F.3d 605, 615-16 (Fed. Cir. 1999)("Although *Markman* and other precedent caution the court against creative reconstruction of an invention by interested persons, courts are not novices in receiving and weighing expertise on both sides of an issue."). But frequently an inventor's deposition is helpful in illuminating what happened during prosecution of the patent application, which in turn can be relevant to the meaning of some terms.

In practice, permitting fact discovery in advance of claim construction is very helpful, serving to focus the claims and defenses in a case. For example, once a plaintiff has discovery on the structure and function of accused products or processes, it may eliminate certain claims that it had initially intended to assert. Accordingly, discovery in advance of claim construction is quite common. Indeed,

the specialized local patent rules of some districts provide for this early discovery, either expressly or as an effect of a requirement for pre-*Markman* disclosures regarding the prosecution history, the accused products, and the prior art.

2.1.1.2.2 Fact Discovery After Claim Construction

Often, as a result of a court's claim construction order, issues may arise justifying additional fact discovery. For example, the court's definition may implicate previously uninvestigated features of an accused device. Most courts therefore set fact discovery to proceed for some period after the expected ruling on claim construction. Courts managing cases in which a deposition of an inventor was taken for *Markman* purposes often limit that initial deposition to claim construction-related topics, and allow a more general deposition after the *Markman* process is complete.

2.1.1.2.3 Expert Discovery After Claim Construction

Expert reports on infringement, invalidity, and damages are central to almost every patent case. Technical experts opine on infringement and invalidity based on the meaning of the claim terms as determined by (or anticipated from) the court's claim construction order. For this reason, claim construction should precede expert reports and depositions. Damage analyses may also be affected by a claim construction. For example, as a result of the court's ruling it may become apparent that certain accused devices or features are not infringing, or that a hypothetical design-around might have been easier or more difficult. Most courts therefore set expert discovery and deposition schedules to begin after claim construction.

2.1.1.3 Unless Claim Construction Clearly Will Control the Outcome, It Should Precede Summary Judgment

Claim construction is a critical predicate to the most common summary judgment motions. Indeed, the structure and operation of an accused device is often undisputed, so that determination of infringement will collapse into a question of claim construction. *Athletic Alternatives, Inc. v. Prince Mfg., Inc.*, 73 F.3d 1573, 1578 (Fed. Cir. 1996). The same can be true for invalidity. Claim construction is the foundation for analysis of both infringement (has the patentee claimed broadly enough?) and invalidity (has the patentee claimed too much?). Most courts complete claim construction first, before allowing any dispositive motions, on the theory that the parties need a definitive statement of claim scope (which after all may be different than either one of them has advocated) before preparing

summary judgment papers. Other courts emphasize the risk that separate claim construction only begets new issues and arguments—sometimes parties seek "clarification" or a "construction of a construction"—and have concluded that only by combining it with summary judgment can one ensure a consistent and coherent outcome.

As is discussed more fully in Chapter 6, some experienced patent jurists have found it useful to distinguish between two kinds of summary judgment motions: (1) those that turn primarily or exclusively upon claim construction—such as non-infringement (e.g., whether the accused device "reads on"[1] the claimed invention); and (2) those that turn principally upon issues other than claim construction. These jurists have found that it is most effective and efficient to combine the first set of summary judgment motions with claim construction. *See* § 6.1.2; *cf. My-Mail, Ltd. v. Am. Online, Inc.*, 476 F.3d 1372, 1378 (Fed. Cir. 2007) ("Because there is no dispute regarding the operation of the accused systems, that issue reduces to a question of claim interpretation and is amenable to summary judgment."); *Gen. Mills, Inc. v. Hunt-Wesson*, Inc., 103 F.3d 978, 983 (Fed. Cir. 1997) ("Where the parties do not dispute any relevant facts regarding the accused product . . . but disagree over possible claim interpretations, the question of literal infringement collapses into claim construction and is amenable to summary judgment."). These jurists address these motions either simultaneously with claim construction or immediately thereafter, and consider the second category of summary judgment motions at another time, depending upon other scheduling concerns, such as discovery.

2.1.1.4 Claim Construction May Encourage Settlement

One argument in favor of early, separate claim construction is that it may facilitate settlement. A court's rulings on claim scope can materially assist the parties in recalibrating their assessment of exposure and allow each side to take a fresh look at its case. As a result, it may be fruitful to schedule a settlement conference to follow shortly after issuance of a claim construction order. See § 2.4.

1. The phrase "reads on" is a term of art in patent law. An accused device, manufacture, composition, or process "reads on" (and hence infringes) a patent claim if it embodies each of the claim limitations. Similarly, a patent claim "reads on" a prior art reference (and hence is invalid) if the prior art reference contains each of the claim limitations.

2.1.1.5 Preliminary Injunction Motions Usually Require Preliminary Claim Construction

Preliminary injunction motions in patent cases typically require a court to construe claim terms on an accelerated schedule. Briefing usually includes the parties' positions on key claim terms (albeit less informed than they might have been through discovery, as explained above), and a court's decision to grant or deny the motion will often hinge on claim construction issues. However, these preliminary constructions are not binding. *Sofamor Danek Group, Inc. v. DePuy-Motech, Inc.*, 74 F.3d 1216, 1221 (Fed. Cir. 1996). Subsequent, more detailed briefing and analysis may lead a court to reconsider and revise constructions applied in the context of a preliminary injunction motion. *See CVI/Beta Ventures, Inc. v. Tura LP*, 112 F.3d 1146, 1160 n.7 (Fed. Cir. 1997); see also § 5.3.2.4.1. We explore the preliminary injunction stage of patent litigation in Chapter 3.

2.1.2 Managing the Parties' Claims, Defenses and Counterclaims: Patent Local Rules

In an effort to provide fair and efficient management of patent cases, some districts have adopted Patent Local Rules (PLRs) (e.g., Northern District of California, Eastern District of Texas), or have adopted standard practices under the Federal Rules and Civil Local Rules that have markedly affected the conduct of patent cases (e.g., Eastern District of Virginia). *See* Appendix D.

The impetus for PLRs arose out of a clash between the liberal notice pleading policy underlying the Federal Rules of Civil Procedure and the need for patent litigants to have more specific notice of the issues they were litigating. *O2 Micro Int'l Ltd. v. Monolithic Power Sys.*, 467 F.3d 1355, 1365-66 (Fed. Cir. 2006). Under the Federal Rules of Civil Procedure, a patent plaintiff need only plead that a defendant is infringing its patent. *See* Fed. R. Civ. P. 8 & Form 16; *see also Phonometrics, Inc. v. Hospitality Franchise Sys., Inc.*, 203 F.3d 790, 794 (Fed. Cir. 2000); *Gammino v. Cellco P'ship*, 2005 U.S. Dist. LEXIS 21557, **5-8 (E.D. Pa. 2005); *but cf. Bell Atl. Corp. v. Twombly*, 127 S.Ct. 1955 (2007) (raising the quantum of factual matter that must be pled (in the context of a Sherman Act cause of action) to survive a motion to dismiss). The plaintiff has not traditionally been required to specify which claims are infringed. Nor has the plaintiff needed to plead its theory of the meaning of the claim terms and the features of the defendant's products (or even the products themselves) that are alleged to infringe. Because a plaintiff may assert multiple claims in multiple patents, a defendant reading a notice pleading complaint is typically left to guess as to the boundaries of a plaintiff's case and the available defenses.

A patent plaintiff reading a notice pleading answer and counterclaim is equally in the dark about the substance of the defendant's case. The defendant, for exam-

ple, need not identify the prior art on which its invalidity defense relies. Nor does the defendant have to plead its theories of claim construction or which combinations of prior art references might invalidate each of the claims. Only the defense of unenforceability due to inequitable conduct in procurement of the patent has to be pled with particularity, because it is viewed as a species of fraud. *See, e.g., MedImmune, Inc. v. Centocor, Inc.*, 271 F. Supp. 2d 762, 772 (D. Md. 2003); *Environ Prods., Inc. v. Total Containment, Inc.*, 951 F. Supp. 57, 59 (E.D. Pa. 1996).

Initial disclosures required under Fed. R. Civ. P. 26 do not alleviate this problem. Routine discovery procedures such as service of contention interrogatories or expert discovery could ultimately provide the necessary information. However, contention interrogatories are often not required to be meaningfully answered until the late stages of discovery. And expert discovery is most efficiently conducted after fact discovery makes it possible to narrow the issues.

As a result, absent forced, early substantive disclosure, patent litigants have been known to engage in a "shifting sands" approach to litigation based on "vexatious shuffling of positions." *See LG Elecs., Inc. v. Q-Lity Computer, Inc.*, 211 F.R.D. 360, 367 (N.D. Cal. 2002). That is, litigants may offer initial, substantially hedged, theories of infringement or invalidity, only to change those theories later by asserting different patent claims, different prior art, or different claim constructions if their initial positions founder. Resulting extensions of fact and expert discovery can unduly prolong the litigation, unnecessarily sapping the court's and the parties' resources.

PLRs were developed to facilitate efficient discovery by requiring patent litigants to promptly disclose the bases underlying their claims. By requiring parties to disclose contentions in an orderly, sequenced manner, PLRs prevent the "shifting sands" tendencies. Neither litigant can engage in a strategic game of saying it will not disclose its contentions until the other side reveals its arguments. In discussing the Northern District of California's PLRs, the Federal Circuit explained that they are designed to require

> both the plaintiff and the defendant in patent cases to provide early notice of their infringement and invalidity contentions, and to proceed with diligence in amending those contentions when new information comes to light in the course of discovery. The rules thus seek to balance the right to develop new information in discovery with the need for certainty as to the legal theories.

O2 Micro Int'l, Ltd. v. Monolithic Power Sys., 467 F.3d 1355, 1365-1366 (Fed. Cir. 2006); *see also Nova Measuring Instruments Ltd. v. Nanometrics, Inc.*, 417 F. Supp. 2d 1121, 1123 (N.D. Cal. 2006) ("The [patent local] rules are designed to require parties to crystallize their theories of the case early in the litigation and to adhere to those theories once they have been disclosed.").

PLRs adopted by a district, or by an individual judge as a standing order or a case-specific order, supplement the Federal Rules of Civil Procedure. Courts may

modify the procedures dictated by PLRs as necessary to suit the issues presented in a particular case. *See, e.g.*, N.D. Cal. Patent L.R. 1.2. All modifications, as well as the rules or standing orders, must of course be consistent with Federal Circuit case law to the extent an issue "pertains to or is unique to patent law." *See O2 Micro*, 467 F.3d at 1364 (citing *Sulzer Textil A.G. v. Picanol N.V.*, 358 F.3d 1356, 1363 (Fed. Cir. 2004)). For example, Federal Circuit law was applied in cases addressing whether claim charts exchanged by parties pursuant to PLRs could be amended to add new statutory bases for invalidity and infringement. *See, e.g., Genentech, Inc. v. Amgen, Inc.*, 289 F.3d 761, 774 (Fed. Cir. 2002); *Advanced Cardiovascular Sys. v. Medtronic, Inc.*, 265 F.3d 1294, 1303 (Fed. Cir. 2001). In these situations, the Federal Circuit held that the sufficiency of notice regarding defenses or theories of liability under specific statutory provisions of patent law "clearly implicat[ed] the jurisprudential responsibilities of this court within its exclusive jurisdiction." *Advanced Cardiovascular*, 265 F.3d at 1303; *see also In re Spalding Sports Worldwide, Inc.*, 203 F.3d 800, 803-04 (Fed. Cir. 2000) (applying Federal Circuit law to a question of attorney-client privilege between patentee and patent attorney).

Chart 2.2 depicts a typical timeline for a patent case utilizing patent-specific initial disclosures, a structured claim construction briefing process including a joint claim construction statement, and a *Markman* hearing. The process depicted here is consistent with the requirements of local patent rules in districts such as the Northern District of California and the Eastern District of Texas. [2]

2. In March 2008, the PLRs for the Northern District of California were amended in two important respects, which are reflected in the text and table in this section. First, the concept of "preliminary" contentions has been eliminated, in favor of reliance on the traditional practice of allowing amendments for good cause. Second, in designating claim terms for construction, the parties are limited to ten terms, absent leave of court.

Chart 2.2
Patent Local Rules Timetable,
Northern District of California

(1) Case Management Conference	Set by Court	Patent Local Rule
(2) Disclosure of Asserted Claims and Infringement Contentions	Within 10 days of (1)	3-1 & 3-2
(3) Invalidity Contentions	Within 45 days of (2)	3-3 & 3-4
(4) Identify Claim Terms to be Construed	Within 10 days of (3)	4-1
(5) Preliminary Claim Constructions	Within 20 days of (4)	4-2
(6) Joint Claim Construction Statement	Within 60 days of (3)	4-3
(7) Close of Claim Construction Discovery	Within 30 days of (6)	4-4
(8) Opening Claim Construction Brief	Within 45 days of (6)	4-5(a)
(9) Responsive Claim Construction Brief	Within 14 days of (8)	4-5(b)
(10) Reply Claim Construction Brief	Within 7 days of (9)	4-5(c)
(11) *Markman* Hearing	Within 14 days of (10)	4-6
(12) Claim Construction Order	TBD by Court	
(13) Produce Advice of Counsel, if any	Within 50 days of (12)	3-7

An accelerated timeline may be appropriate for less complex cases, for example where the technology is quite simple or there is little dispute as to the structure, function, or operation of accused devices. Under a particularly streamlined plan, the parties would not make patent-specific initial disclosures or file joint claim construction statements. The court might also forgo a *Markman* hearing and address claim construction as part of summary judgment. Chart 2.3 provides an example of such a timeline. The decision to adopt an accelerated timeline can best be made after discussion with the parties of the substantive issues that will drive the case (discussed further in § 2.5).

Chart 2.3
Accelerated Patent Case Management Timeline

(1) Case Management Conference	Set by court
(2) Produce Opinion of Counsel, if any	Within 2 months after CMC
(3) Close of Fact Discovery	5 months after CMC
(4) Close of Expert Discovery	2 months after (3)
(5) Opening Briefs on Claim Construction and Summary Judgment	Within 30 days of (4)
(6) Responsive Briefs on Claim Construction and Summary Judgment	Within 14 days of (5)
(7) Reply Briefs on Claim Construction and Summary Judgment	Within 7 days of (6)
(8) Claim Construction and Summary Judgment Hearing	Within 14 days of (7)
(9) Claim Construction and Summary Judgment Order	TBD by court

2.2 Complaint and Answer

Complaints and answers in patent cases are typically deceptively simple. Generally, the asserted patents are identified and defendants are accused of infringing them. Details of the defendants' allegedly infringing activities are rarely offered, and facts relating to the parties' inter-relationships, although often critical to the practical resolution of the case, are not usually included, absent allegations of inequitable conduct (which must be pled with particularity).

Nevertheless, a patent complaint may spawn a wide variety of early motion practice, including motions to dismiss relating to lack of standing, lack of actual case or controversy, necessary parties and interactions with related legal actions. After the Federal Circuit's decision in *In re Bilksi,* 545 F.3d 943, 951 (Fed. Cir. 2008), motions to dismiss for failure to claim patentable subject matter are possible as well. *See* §§ 6.2.1.1.3, 11.3.1.3. To understand the underpinnings of the disputes that will be raised in these and subsequent motions, it is often helpful for the court to understand the parties' prior dealings and connections, if any. For example, it is quite common that patent litigants have had a business relationship. Some courts find it helpful to explore these issues, as well as other business and market considerations, in an early case management or settlement conference. And, as

the content of the patent infringement complaint is so sparse, it might also be helpful to explore case-specific substantive issues, such as the nature and complexity of the technology, and whether adoption of some variation on the patent local rules will be helpful in managing the case. See § 2.5 below for an expanded checklist of potential topics that might usefully be explored at an early conference with the parties.

2.2.1 Plaintiff Standing Requirements

The plaintiff may be the patent rights holder suing for infringement, or an accused infringer who challenges liability under the Declaratory Judgment Act, claiming the patent is invalid, unenforceable, and/or not infringed.

2.2.1.1 Infringement Plaintiff

2.2.1.1.1 Infringement Plaintiff Must Hold All Substantial Patent Rights

A party suing for infringement must hold exclusive rights to the patent being asserted. A patent issues in the name of the inventor(s) or their assignee (usually an employer), who is then the "patentee." Only a patentee can bring an action for patent infringement. 35 U.S.C. § 281. The term "patentee" is defined as including "not only the patentee to whom the patent was issued but also the successors in title to the patentee." § 100(d). Courts also permit exclusive licensees to bring suit in their own name if the exclusive licensee holds "all substantial rights" in the patent, becoming, in effect, an assignee (and therefore a "patentee" within the meaning of Section 281). *See Textile Prods., Inc. v. Mead Corp.*, 134 F.3d 1481, 1484 (Fed. Cir. 1998). "All substantial rights" usually include the right to sue for infringement (without leave of the patent owner) and the right to grant licenses; courts look to the intention of the parties and examine the substance of what was retained by the owner and what was granted to the licensee in order to determine whether the licensee has obtained all substantial rights. *See Vaupel Textilmaschinen KG v. Meccanica Euro Italia SPA*, 944 F.2d 870, 874-75 (Fed. Cir. 1991). Because patent assignments must be in writing, § 261, an oral agreement cannot grant "all substantial rights" in a patent sufficient to confer standing. *See Prima Tek II, L.L.C. v. A-Roo Co.*, 222 F.3d 1372, 1377 (Fed. Cir. 2000).

An exclusive licensee without all substantial rights can nevertheless be injured by another's infringement, and therefore will have standing to sue, but only as a co-plaintiff with the patentee. *See Mentor H/S, Inc. v. Med. Device Alliance, Inc.*, 240 F.3d 1016, 1017, 1019 (Fed. Cir. 2001); *cf. Propat Int'l Corp. v. Rpost, Inc.*, 473 F.3d 1187 (Fed. Cir. 2007). A license that is not exclusive or that confers less

than all the rights held under the patent cannot confer standing. *See Prima Tek II*, 222 F.3d at 1377-78.

2.2.1.1.2 Plaintiff Must Join All Joint Patent Owners

Where ownership of a patent is disputed, early motion practice may include an accused infringer's motion to dismiss for failure to join a purported third party co-owner of the patent. This may happen, for example, when the patent resulted from a joint development project, *see Katz v. Lear Siegler, Inc.*, 909 F.2d 1459, 1462 (Fed. Cir. 1990), or where there is dispute as to whether asserted patent claims were included within an assignment agreement, *Isr. Bio-Eng'g Project v. Amgen Inc.*, 475 F.3d 1256, 1265 (Fed. Cir. 2007).

In such cases, the court must first determine ownership of the patent. "Ownership depends upon 'the substance of what was granted' through assignment." *Isr. Bio-Eng'g*, 475 F.3d at 1265 (quoting *Vaupel Textile*, 944 F.2d at 874). "In construing the substance of the assignment, a court must carefully consider the intention of the parties and the language of the grant." *Id.* The agreement must be interpreted according to applicable state law. *See id.* (interpreting contract under Israeli law). If it is determined that an owner of the patent is not included as a plaintiff, the complaint must be dismissed. *Id.* (affirming summary judgment that plaintiff lacked standing where plaintiff lacked complete ownership interest and co-owner was not joined). As directed below (§ 2.2.1.1.6), such a dismissal should be without prejudice to re-file an action with the jurisdictional defect corrected.

2.2.1.1.3 An Exclusive Licensee Must Sometimes Join Its Licensor

Where an asserted exclusive licensee sues for infringement in its own name, a defendant will frequently move to dismiss for failure to join the licensor as a necessary party. *See, e.g.*, *Propat Int'l Corp. v. RPost, Inc.*, 473 F.3d 1187, 1189-93 (Fed. Cir. 2007); *Fieldturf, Inc. v. Sw. Recreational Indus. Inc.*, 357 F.3d 1266, 1268-70 (Fed. Cir. 2004); *see also Intellectual Prop. Dev., Inc. v. TCI Cablevision of Cal., Inc.*, 248 F.3d 1333, 1339-40 (Fed. Cir. 2001). An exclusive licensee receives more substantial rights in a patent than a nonexclusive licensee, but receives fewer rights than an assignee of all substantial patent rights. For example, an exclusive licensee could receive the exclusive right to practice an invention within a given limited territory. *Id.* An exclusive licensee has standing to sue, but must join the patent owner as a necessary party. *Id.* at 1348; *Propat,* 473 F.3d at 1193; *Mentor H/S, Inc.*, 240 F.3d at 1019.

If an exclusive licensee has failed to join the patent owner, the action may be dismissed without prejudice, in anticipation of its being re-filed with the patent owner named as a co-plaintiff. Indeed, the Supreme Court has explained that

> The owner of a patent, who grants to another the exclusive right to make, use, or vend the invention, which does not constitute a statutory assignment, holds title to the patent in trust for such licensee, to the extent that he *must allow the use of his name as plaintiff in any action brought at the instance of the licensee* in law or in equity to obtain damages for the injury to his exclusive right by an infringer, or to enjoin infringement of it.

Indep. Wireless Tel. Co. v. Radio Corp. of Am., 269 U.S. 459, 469 (1926) (emphasis added). Consequently, rather than dismissing the action, a court may grant a motion or cross-motion by the exclusive licensee for leave to amend to join the patent owner, either voluntarily or involuntarily. *See Intellectual Prop. Dev.*, 248 F.3d at 1347-48 (affirming district court's granting plaintiff-exclusive licensee's motion for leave to amend to add patent owner as a party); *see also Abbott Labs. v. Diamedix Corp.,* 47 F.3d 1128, 1130-34 (Fed. Cir. 1995).

2.2.1.1.4 A Nonexclusive Licensee Has No Standing to Sue

"[A] nonexclusive license or 'bare' license—a covenant by the patent owner not to sue the licensee for making, using, or selling the patented invention and under which the patent owner reserves the right to grant similar licenses to other entities—confers no constitutional standing on the licensee under the Patent Act to bring suit or even to join a suit with the patentee because a nonexclusive (or 'bare') licensee suffers no legal injury from infringement." *Intellectual Prop. Dev., Inc. v. TCI Cablevision of Cal., Inc.*, 248 F.3d 1333, 1345 (Fed. Cir. 2001).

2.2.1.1.5 Patentee Can Only Convey Right to Sue by Transferring Substantially All Patent Rights

Assignment of a patent, or an exclusive license of a patent that conveys substantially all patent rights, conveys to the assignee or licensee the right to sue for present and future infringement of the patent. *Propat*, 473 F.3d at 1189. A patent holder cannot, however, confer through assignment a right to sue for infringement—whether past, present, or future—separate from the conveyance of a proprietary interest in the patent. *Id.* at 1194 (citing *Crown Die & Tool Co. v. Nye Tool & Mach. Works*, 261 U.S. 24, 34-36 (1923)). As discussed above, in order to have standing to sue, a party must be an exclusive licensee or assignee of all substantial rights in a patent.

Further, because infringement harms only the owner of the patent at the time of the infringing acts, conveyance of the patent does not normally include the right to recover for injury occurring to the prior owner of the patent. *Minco Inc. v. Combustion Eng'g*, 95 F.3d 1109, 1117 (Fed. Cir. 1996). Thus, as a general rule, "the right to sue for *prior* infringement is not transferred unless the assignment

agreement manifests an intent to transfer this right." *Id.* (emphasis added). In determining whether the right to sue for prior infringement is part of a patent assignment, the court should look to an analysis of the assignment according to state contract law. *Id.* "Neither statute nor common law precedent, however, requires a particular formula or set prescription of words to express that conveyance." *Id.*

2.2.1.1.6 Standing Motions Result in Dismissal Without Prejudice

If a case must be dismissed for lack of standing, it should be dismissed without prejudice. *See Propat*, 473 F.3d at 1194 (affirming district court's dismissal without prejudice even where non-exclusive licensee could not cure standing defect by joining patent holder). If a plaintiff lacks standing, the court's jurisdiction cannot be invoked, and the plaintiff should not be penalized if it subsequently corrects the standing defect, e.g., by joining all co-owners of the patent rights.

2.2.1.2 Declaratory Judgment Plaintiff

A district court has subject-matter jurisdiction over a patent declaratory judgment action when an "actual controversy" exists between the plaintiff and defendant. *See* 28 U.S.C. § 2201(a) ("In a case of actual controversy within its jurisdiction . . . any court of the United States, upon the filing of an appropriate pleading, may declare the rights and other legal relations of any interested party seeking such declaration, whether or not further relief is or could be sought."). Where the patentee files for infringement, the defendant's answer will almost always plead a counterclaim for a declaration of non-infringement, invalidity, and sometimes unenforceability. The reason for this apparently superfluous pleading is to preserve the defendant's right to secure adjudication of claims that a plaintiff may later want to abandon for tactical reasons. For example, a plaintiff may decide to abandon claims in one asserted patent because the defendant appears to be raising strong invalidity defenses as to that patent. A defendant's declaratory judgment counterclaim maintains its ability to adjudicate the patent's validity and avoid being threatened by that patent again.

Declaratory judgment actions may also initiate a case where the plaintiff disputes the patentee's extrajudicial assertion of infringement and wants judicial resolution of the issue, usually in a forum that is convenient or provides some other advantage. Most typically, these cases arise when the patent holder has sent a letter or otherwise given notice suggesting that the potential infringer may want to license the patent. Although patent holders take care to craft letters with ambiguous language to avoid provoking declaratory judgment jurisdiction, there is no "safe

harbor" form of notice. Frequently the patent holder will respond to a declaratory judgment filing by immediately filing an infringement complaint in another jurisdiction. These disputes will usually be controlled by the "first filed" rule and its exceptions designed to prevent forum shopping.

The Supreme Court remarked that its precedent "do[es] not draw the brightest of lines between those declaratory-judgment actions that satisfy the case-or-controversy requirement and those that do not." *MedImmune, Inc. v. Genentech, Inc.*, 549 U.S. 118, 127 (2007). The Court explained: "Basically, the question in each case is whether the facts alleged, under all the circumstances, show that there is a substantial controversy, between parties having adverse legal interests, of sufficient immediacy and reality to warrant the issuance of a declaratory judgment." *Id.* (quoting *Md. Cas. Co. v. Pac. Coal & Oil Co.*, 312 U.S. 270, 273 (1941)). The Supreme Court rejected the "reasonable apprehension of suit" test, holding merely that "the dispute be 'definite and concrete, touching the legal relations having adverse legal interests'; and that it be 'real and substantial' and 'admi[t] of specific relief through a decree of a conclusive character, as distinguished from an opinion advising what the law would be upon a hypothetical state of facts.'" *Id.* at 132 n.11 (quoting *Aetna Life Ins. Co. v. Haworth*, 300 U.S. 227, 240 (1937)) (alteration in original).

Interpreting *MedImmune*, the Federal Circuit held that declaratory judgment jurisdiction exists whenever "a patentee asserts rights under a patent based on certain identified ongoing or planned activity of another party, and where that party contends that it has the right to engage in the accused activity without license." *SanDisk Corp. v. STMicroelectronics, Inc.*, 480 F.3d 1372, 1381 (Fed. Cir. 2007); *see also Micron Tech., Inc. v. Mosaid Techs., Inc.*, 518 F.3d 897, 903 (Fed. Cir. 2008) (applying *Medimmune* and discussing the first filed rule).

2.2.1.2.1 Defendant's Declaratory Judgment Counterclaims Are Not Mooted by Dismissal of Plaintiff's Infringement Claims

Accused infringers often file counterclaims for a declaratory judgment of invalidity as well as non-infringement. The Supreme Court has held that appellate affirmance of a judgment of non-infringement does not moot a declaratory judgment counterclaim of patent invalidity. *Cardinal Chem. Co. v. Morton Int'l, Inc.*, 508 U.S. 83, 98 (1993). In so holding, the Court again emphasized the importance to the public at large of resolving questions of patent validity, citing its opinion in *Blonder-Tongue Labs., Inc. v. Univ. of Ill. Found.*, 402 U.S. 313 (1971), and warned against "the danger that the opportunity to relitigate might, as a practical matter, grant monopoly privileges to the holders of invalid patents." *Cardinal Chem.*, 508 U.S. at 101. However, a district court in the exercise of its discretion may decline to resolve a declaratory claim of invalidity following its adjudication

of non-infringement. *See MedImmune, Inc. v. Genentech, Inc.*, 549 U.S. 118, 136 (2007) (noting that the Declaratory Judgment Act, which provides that a court "may declare the rights and other legal relations of any interested party," 28 U.S.C. § 2201(a), "has long been understood 'to confer on federal courts unique and substantial discretion in deciding whether to declare the rights of litigants'" (quoting *Wilton v. Seven Falls Co.*, 515 U.S. 277, 286 (1995)).

2.2.1.2.2 Assignor Is Estopped From Seeking Declaratory Judgment of Invalidity

An inventor who assigns his patent rights to an employer and then leaves to join a competing company may find himself sued for infringement. Under the equitable doctrine of assignor estoppel, the former employee is estopped from raising invalidity as a defense or as the basis of a declaratory judgment claim. *Pandrol USA, LP v. Airboss Ry. Prods., Inc.*, 424 F.3d 1161, 1166-67 (Fed. Cir. 2005); *Diamond Scientific Co. v. Ambico, Inc.*, 848 F.2d 1220, 1224 (Fed. Cir. 1988). The underlying policy is that "an assignor should not be permitted to sell something and later assert that what was sold is worthless, all to the detriment of the assignee." *Pandrol*, 424 F.3d at 1167 (quoting *Diamond*, 848 F.2d at 1224).

2.2.1.2.2.1 Parties in Privity with Assignor Are also Estopped

Because assignor estoppel is an equitable doctrine "mainly concerned with the balance of the equities between the parties[,] [t]hose in privity with the assignor partake of that balance, hence, extension of the estoppel to those in privity is justified." *Intel Corp. v U.S. Int'l Trade Comm'n*, 946 F.2d 821, 837 (Fed. Cir. 1991) (quoting *Shamrock Techs., Inc. v. Med.Sterilization, Inc.*, 903 F.2d 789, 793 (Fed. Cir. 1990)). Thus, the assignor's subsequent employer may also be estopped from asserting that the assigned patent is invalid. *Id.*; *Mentor Graphics Corp. v. Quickturn Design Sys.*, 150 F.3d 1374, 1379 (Fed. Cir. 1998) ("Assignor estoppel also prevents parties in privity with an estopped assignor from challenging the validity of the patent.").

In determining whether there is privity, the court should consider all contacts between the assignor and the alleged infringer, both direct and indirect, including the relationship between those contacts and the alleged infringement. *Intel Corp.*, 946 F.2d at 839.

> Privity, like the doctrine of assignor estoppel itself, is determined upon a balance of the equities. If an inventor assigns his invention to his employer company A and leaves to join company B, whether B is in privity and thus bound by the doc-

> trine will depend on the equities dictated by the relationship between the inventor and company B in light of the act of infringement. The closer that relationship, the more the equities will favor applying the doctrine to company B.

Id. at 839-40 (quoting *Shamrock Technologies*, 903 F.2d at 793); *see also Checkpoint Sys. v. All-Tag Sec. S.A.*, 412 F.3d 1331, 1337 (Fed. Cir. 2005) ("Privity may be established where there is a close relationship among the relevant parties, such as where the ultimate infringer availed itself of the inventor's knowledge and assistance to conduct infringement."). Factors considered by other courts in assessing privity include: (1) the extent and nature of the parties' business relationships (e.g., whether a party challenging validity formed a joint venture with the assignor to manufacture the infringing product or whether a party challenging validity is a subsidiary of the assignor), (2) the financial dealings between the parties, including whether there is an indemnification agreement between the alleged infringer and the assignor, and (3) whether the ultimate infringer availed itself of the inventor's "knowledge and assistance" to conduct infringement. *Id.* (citing cases); *Checkpoint*, 412 F.3d at 1337; *Mentor Graphics*, 150 F.3d at 1379; *Dane Indus. v. Ameritek Indus., LLC,* 154 Fed. App'x 894 (Fed. Cir. 2005) (unpublished opinion).

2.2.1.2.3 Actual Case or Controversy Can Exist for Licensee in Good Standing Even in Absence of Material Breach

Patent licensees who are performing under their license agreement (e.g., paying royalties) may nevertheless present a controversy with their licensor sufficient to support a declaratory judgment action. Historically, patent licensees in good standing were unable to sue for a declaratory judgment that the licensed patent is invalid under the reasoning that (1) the licensee was not threatened with imminent injury and therefore had no standing and (2) no actual case or controversy existed so long as the license agreement was not breached. *See, e.g., Gen-Probe Inc. v. Vysis, Inc.*, 359 F.3d 1376, 1381 (Fed. Cir. 2004). A patent licensee was thus barred from suing for declaratory judgment until the license agreement was materially breached. *Id.* The Supreme Court recently reversed this line of cases, holding that a patent licensee is not required to break or terminate its license agreement before seeking a declaratory judgment in federal court that the underlying patent is invalid, unenforceable, or not infringed. *MedImmune, Inc. v. Genentech, Inc.*, 549 U.S. 118, 136-37 (2007).

2.2.2 Defendant Standing Requirements

2.2.2.1 Infringement Defendants

A patent holder is not obligated to sue all accused infringers, but can select from alleged infringers—both direct and indirect. *See Giese v. Pierce Chem. Co.*, 29 F. Supp. 2d 33, 40 (D. Mass. 1998) ("Courts have generally held that a patentee need not sue more than one infringer at a given time.") (quoting *Watkins v. Nw. Ohio Tractor Pullers Assn., Inc.*, 630 F.2d 1155, 1162 (6th Cir. 1980)).

While direct infringement must be proved as a predicate to proving induced or contributory infringement, *Joy Techs., Inc. v. Flakt, Inc.*, 6 F.3d 770, 774 (Fed. Cir. 1993) (collecting cases), direct infringers do not have to be joined in a suit against a contributory infringer. *Refac Int'l, Ltd. v. IBM*, 790 F.2d 79, 81 (Fed. Cir. 1986) ("direct infringers need not be parties"); *see also Upjohn Co. v. Syntro Corp.*, 14 U.S.P.Q.2d 1469, 1473 (D. Del. 1990).

2.2.2.2 Declaratory Judgment Defendants

A declaratory judgment action seeking to invalidate or render unenforceable a patent must name as defendants all parties holding an interest in the patent. However, non-exclusive licensees are generally not thought to be necessary parties. *See In-Tech Mktg. Inc. v. Hasbro, Inc.*, 685 F. Supp. 436, 438-41 (D.N.J. 1988) (holding that a purported exclusive licensee was not a necessary party); *Meese v. Eaton Mfg. Co.*, 35 F.R.D. 162, 166-67 (N.D. Ohio 1964) (stating that, notwithstanding *Independent Wireless*, "[c]ourts have generally agreed that a mere licensee is not indispensable to an infringement suit by the patentholder"); *cf. Indep. Wireless Tel. Co. v. Radio Corp. of Am.*, 269 U.S. 459, 466 (1926) (describing a licensor and an exclusive licensee as "generally necessary parties in the action in equity"); *Arey v. Goodyear Tire & Rubber Co.*, 11 F.R.D. 209, 209 (N.D. Ohio 1951) (stating that an exclusive licensee was both necessary and indispensable).

2.2.3 Pleading

2.2.3.1 Infringement

Infringement complaints are usually sparse and conclusory. Typically, a patent holder will merely allege that a defendant is directly or indirectly infringing a patent. The asserted patents must be identified, and are often attached to the complaint. (In some jurisdictions, local rules require that they be attached.) The complaint should also provide a statement of ownership of the asserted patent, identify the accused infringer(s), provide a brief statement of alleged infringing acts, and

(if applicable) a statement regarding the patent owner's marking of product with the patent number under § 287.

Under the notice pleading requirement of Rule 8(a), the patent holder is not required to do more. Therefore, a defendant will not know which claims of the patents are being asserted against it and sometimes will not even know which of its products or processes are accused of infringing. As discussed above, some courts require disclosure of this information early in the case. *See, e.g.,* N.D. Cal. Patent Local Rule 3-1 (requiring early disclosure of asserted claims and accused products). After that early disclosure, the asserted claims and accused products may not be amended without leave of court for good cause. *See* N.D. Cal. Patent Local Rule 3-6. Good cause may be demonstrated by a plaintiff's showing of diligence in investigating accused products, *O2 Micro Int'l, Ltd. v. Monolithic Power Sys.*, 467 F.3d 1355, 1366 (Fed. Cir. 2006); *Abbott Diabetes Care Inc. v. Roche Diagnostics Corp.*, No. C05-03117 MJJ, 2007 U.S. Dist. LEXIS 59161, at **5-6 (N.D. Cal. July 30, 2007).

Courts also consider procedural matters in assessing good cause, including the impact of amendment on other case deadlines, whether the opponent already had sufficient notice of the added contentions, and whether there is prejudice or whether any prejudice may be mitigated through an award of costs. *Avago Techs. Gen. IP PTE Ltd. v. Elan Microelectronics Corp.*, No. C04-05385 JW (HRL), 2007 U.S. Dist. LEXIS 39543, at *4 (N.D. Cal. May 15, 2007) (citing cases); *3COM Corp v. D-Link Sys., Inc.*, No C 03-2177 VRW, 2007 U.S. Dist. LEXIS 26542, at **21-22 (N.D. Cal. March 27, 2007) (finding good cause where amendment would occur before a *Markman* hearing and before the close of discovery; "[i]t is to be expected that a patent holder may find other product designations that infringe as discovery progresses"). Indeed, a decision on good cause may hinge upon the timing of the amendments sought. *Compare Gen. Atomics v. Axis-Shield ASA*, No. C 05-04074 SI, 2006 U.S. Dist. LEXIS 58939, at **5-6 (N.D. Cal. Aug. 7, 2006) (finding good cause where party "did not conceive of the infringement theory it seeks to add until the parties exchanged preliminary claim construction statements" and noting that the amendments were sought before claim construction) *with Atmel Corp. v. Info. Storage Devices Inc.*, No. C 95-1987 FMS, 1998 U.S. Dist. LEXIS 17564, at **5-9 (N.D. Cal. Nov. 5, 1998) (denying leave to amend based on "newly discovered facts" where claim construction was completed and summary judgment briefing had begun).

2.2.3.2 Willful Infringement

Like infringement, willful infringement is pled without particularity.

2.2.3.2.1 Opinions of Counsel

Defendants often rely on opinions of counsel as part of a defense to an allegation of willful infringement. A defendant need not plead in its answer that it will be relying on an opinion of counsel—that is, a patent attorney's opinion as to whether the asserted patent is valid and/or infringed by the defendant's products or processes. However, in the interests of fair and efficient discovery, some courts require early election of the advice-of-counsel defense, including production of the opinion and documents that were relied on in making it. *See, e.g.,* N.D. Cal. Patent Local Rule 3-8.

2.2.3.2.2 Privilege Issues Relating to Opinions of Counsel

Where a party relies on an opinion of counsel, it waives privilege as to the opinion. *In re EchoStar Commc'ns. Corp.*, 448 F.3d 1294, 1299 (Fed. Cir. 2006); *Informatica Corp. v. Bus. Objects Data Integration*, 2006 U.S. Dist. LEXIS 58976, *5 (N.D. Cal. 2006).

The scope of that waiver is a knotty problem that often becomes the subject of motion practice. The problem is exacerbated when litigation counsel also gave the opinion. *Genentech, Inc. v. Insmed Inc.*, 442 F. Supp. 2d 838, 842-44 (N.D. Cal. 2006). Federal Circuit law is used to analyze the scope of the waiver in these cases. *EchoStar*, 448 F.3d at 1298. Waiver extends not only to opinions on which the party intends to rely, but also to all related communications and documents relied upon or considered in connection with the opinion. *Id.* at 1304.

The Federal Circuit clarified the scope of privilege waiver in *In re Seagate Tech. LLC*, 497 F.3d 1360 (Fed. Cir. 2007) (en banc). The court found that the "significantly different functions of trial counsel and opinion counsel advise against extending waiver to trial counsel." *Id.* at 1373. The classic "sword and shield" argument does not apply, because of the very different types of legal advice offered by trial counsel (litigation strategy and adversarial representation) and opinion counsel (commercial "due care" taken before undertaking potentially infringing activity).[3] *Id.* at 1372-75. The same rationale applies to the work-product doctrine. *Id.* at 1375-76 (applying *Hickman v. Taylor*, 329 U.S. 495, 510-11 (1947), and *United States v. Nobles*, 422 U.S. 225, 239-40 (1975)).

Although *Seagate* provides courts with substantial guidance, they must continue to be attentive, in summary judgment practice and at trial, to attempts by a party to use evidence it previously argued was outside the scope of the waiver, particularly as the law in this area continues to evolve. The standard for determining willfulness remains the totality of the circumstances. *See Trading Technologies*

---

3. The Federal Circuit heavily discounted the value of post-litigation-commencement opinions for this same reason.

Intl., Inc. v. eSpeed, Inc., 2008 U.S. Dist. LEXIS 295 (N.D. Ill.). Patentees may comment to the jury regarding the defendant's failure to obtain an opinion letter, although there is no adverse inference to be drawn from such evidence. *See Energy Transp. Group, Inc. v. William Demant Holding*, 2008 WL 114861 (D. Del.) ("[N]othing in *Seagate* forbids a jury to consider whether a defendant obtained advice of counsel as part of the totality of the circumstances in determining willfulness.").

2.2.3.3 Defenses

2.2.3.3.1 Invalidity Defenses

Like plaintiff's allegations of infringement, defendant's allegations of invalidity need not be pled with particularity. Defendants typically recite only that the patent is invalid, and may identify sections of the Patent Act, such as §§ 101, 102, 103, or 112. Although this sort of notice pleading satisfies the Federal Rules of Civl Procedure, in practice it gives little notice to a patent holder about what grounds for invalidity a defendant will actually assert. As a result, some district judges require that defendants disclose the specific grounds on which they assert invalidity early in a case, just as they require specific infringement contentions from a patent owner. Courts can require defendants to identify specific prior art references they intend to assert as invalidating and to disclose invalidity claims based on written description, indefiniteness, or enablement. *See, e.g.*, N.D. Cal. Patent Local Rule 3-3. Following a specified time period for making these disclosures, they may be amended only upon a showing of good cause. *See* N.D. Cal. Patent Local Rule 3-7.

2.2.3.3.2 Unenforeceability Defenses

Unenforceability defenses include inequitable conduct, prosecution laches, equitable estoppel, and patent misuse (e.g., using patent rights to force tying agreements or compulsory licensing packages). With the exception of inequitable conduct, unenforceability allegations need not be pled with particularity.

2.2.3.3.2.1 Inequitable Conduct Pled with Particularity

Inequitable conduct is seen as a species of fraud, and must be pled with particularity. Fed. R. Civ. P. 9(b). Inequitable conduct must rest on specific allegations of intentional, material omissions or misrepresentations by the patentee during the application process for a patent. *Ferguson Beauregard/Logic Controls, Inc. v. Mega Sys., LLC*, 350 F.3d 1327, 1344 (Fed. Cir. 2003); Fed. R. Civ. P. 9(b). Intent may be pled on information and belief. Early in the case, any order granting dis-

missal for lack of specificity should be without prejudice. *See Sun Microsystems v. Dataram Corp.*, 1997 U.S. Dist. LEXIS 4557, **5-7, 12-14 (N.D. Cal. 1997).

Because of the particularity requirement, defendants often seek leave to amend or to add inequitable conduct allegations as they are developed during discovery. Assuming the defense is pled with sufficient particularity, such motions should be granted if brought early in the case. *Id.* However, as the case approaches trial, the potential for prejudice to the patentee from late-arising claims increases. *See, e.g., Central Admixture Pharm. Servs. v. Advanced Cardiac Solutions, P.C.*, 482 F.3d 1347, 1357 (Fed. Cir. 2007).

To forestall unnecessary motion practice relating to inequitable conduct claims, courts often set a cut-off date for pleading such allegations. Under this approach, prior to that date, a defendant may add inequitable conduct allegations without seeking leave of court. But thereafter, such allegations may only be added upon a showing of good cause for delay. A typical time frame for cut-off is when fact discovery is approximately 60 percent completed (e.g., if fact discovery is scheduled for a 5-month period, the cut-off date for asserting inequitable conduct would be at 3 months).

2.2.3.3.2.2 Privilege Issues Relating to Unenforceability

Unenforceability allegations typically relate to the prosecution of the patent (inequitable conduct and prosecution laches) or to decisions relating to misuse of the patent, such as conditioning a license agreement on the requirement to buy non-patented products (i.e., improper tying schemes). These issues almost always involve attorney-client communications and may also involve attorney work-product. As a result, discovery may generate disputes over privilege. Attorney-client privilege doctrine applies in these matters as it applies generally. Therefore, absent a showing under the crime-fraud exception doctrine, *In re Rhone-Poulenc Rorer*, 1998 U.S. App. LEXIS 12829 (Fed. Cir. 1998), the privilege may be asserted, even where it appears to obstruct fact-gathering critical to prosecuting an unenforceability claim. *Id.*

2.2.4 Counterclaims

The defendant typically asserts an array of counterclaims. In nearly every case, it seeks a declaratory judgment that the asserted patents are invalid and/or unenforceable. The defendant may also assert infringement of its own patents.

2.2.4.1 Compulsory Counterclaims

Under Fed. R. Civ. P. 13(a), a counterclaim is compulsory if it arises out of the same transaction or occurrence as the opposing party's claim. Unsurprisingly, a

counterclaim for infringement is compulsory in an action for declaration of non-infringement. *Vivid Techs., Inc. v. Am. Sci. & Eng'g, Inc.*, 200 F.3d 795, 802 (Fed. Cir. 1999). Similarly, counterclaims for declaratory judgment of non-infringement or invalidity are compulsory with respect to a claim of infringement.

2.2.4.2 Non-Compulsory Counterclaims

In the most common non-compulsory counterclaim in a patent suit, the defendant/accused infringer alleges infringement of defendant's patent(s) by the plaintiff. Other arguably non-compulsory counterclaims may include antitrust claims, *Walker Process* claims (that the patentee is attempting to assert a fraudulently procured patent), *Walker Process Equip., Inc. v. Food Machinery & Chemical Corp.,* 382 U.S. 172 (1965), or *Handgards* claims (that the patentee is attempting to enforce a patent it knows to be invalid or not infringed), *Handgards, Inc. v. Ethicon, Inc.,* 601 F.2d 986 (9th Cir. 1979). *See Tank Insulation Int'l, Inc. v. Insultherm, Inc.*, 104 F.3d 83 (5th Cir. 1997); *Hydranautics v. FilmTec Corp.*, 70 F.3d 533, 536-37 (9th Cir. 1995). Some courts have held that antitrust claims based upon allegations of patent invalidity are compulsory, rather than permissive. *See Critical-Vac Filtration Corp. v. Minuteman Int'l, Inc.*, 233 F.3d 697, 702 (2d Cir. 2000). The Federal Circuit has observed the split of authority but has not resolved it. *See Nobelpharma AB v. Implant Innovations, Inc.*, 141 F.3d 1059, 1067 n.4 (Fed. Cir. 1998).

2.2.5 Potential Overlap with Non-Patent Claims; Choice of Law

Patent complaints may overlap with other forms of federal intellectual property claims (e.g., copyright, trademark), antitrust and sham litigation claims, and state law claims such as unfair competition, trade secret misappropriation, or breach of a patent license agreement. Federal Circuit law governs issues within its "exclusive jurisdiction" (i.e., patent law issues). *See, e.g., Advanced Cardiovascular Sys. v. Medtronic, Inc.*, 265 F.3d 1294, 1303 (Fed. Cir. 2001) (holding that the Federal Circuit will apply its "own law to both substantive and procedural issues intimately involved in the substance of enforcement of the patent right.") (quotation omitted). Issues not in the Federal Circuit's exclusive jurisdiction are governed by the law of the regional circuit in which the district court sits. *Id.*

The question of whether federal patent law preempts other federal or state law claims is decided based on Federal Circuit law, not regional circuit law. *Midwest Indus., Inc. v. Karavan Trailers, Inc.*, 175 F.3d 1356, 1360-61 (Fed. Cir. 1999).

2.2.6 Interaction with Other Types of Actions

2.2.6.1 Bankruptcy

Typically, when a debtor begins bankruptcy proceedings, all pending actions against the debtor, including actions in federal district courts, are stayed. Section 362(a)(3) of the Bankruptcy Code provides that a petition "operates as a stay, applicable to all entities of . . . any act to obtain possession of property of the estate or of property from the estate or to exercise control over property of the estate." The stay applies to pending patent litigation against a debtor, but not to claims by the debtor. *See Seiko Epson Corp. v. Nu-Kote Int'l, Inc.*, 190 F.3d 1360, 1364 (Fed. Cir. 1999). Such claims may proceed (e.g., if the debtor is the accused infringer, the debtor's counterclaims for patent invalidity may proceed). *See id.* Likewise, the automatic stay does not apply to non-bankrupt co-defendants of a debtor. *Id.*; *but see In re Excel Innovations, Inc.*, 502 F.3d 1086, 1093-94, n.1 (9th Cir. 2007) (holding that on motion by debtor, bankruptcy court may enjoin ongoing proceedings against non-debtor; in most circuits, standard analysis for granting preliminary injunctive relief applies; some circuits do not require showing of irreparable harm). The district court may stay the entire case once the claims against the debtor are stayed by way of the bankruptcy court's automatic stay. Or it may proceed with those aspects of the case that are not subject to the automatic stay.

A party may petition the bankruptcy court for partial or full relief from the stay. *See Outlast Techs., Inc. v. Frisby Techs., Inc.*, 298 F. Supp. 2d 1112, 1113-14 (D. Colo. 2004) (modifying stay order to allow summary judgment motions already filed in the district court to be decided). If a district court believes that such relief is appropriate, for example because trial has commenced or a decision on summary judgment is pending, it may suggest such a motion for relief in its order staying proceedings in response to the bankruptcy court's automatic stay notice.

The bankruptcy court's disposition of the debtor's bankruptcy does not give the debtor a license to commit post-petition infringement. "A discharge in bankruptcy operates as an injunction against a plaintiff asserting a claim for a debt incurred, or a cause of action that arose, before the date of bankruptcy discharge. It does not act as an injunction against a plaintiff asserting a claim for a debt incurred, or a cause of action that arose, after the date of bankruptcy discharge." *Hazelquist*, 437 F.3d at 1180. Therefore, to the extent an accused infringer continues infringement after discharge of debts in bankruptcy court, it is subject to renewed patent litigation in federal district court. *Id.*

2.2.6.2 International Trade Commission Actions

The United States International Trade Commission (ITC) considers disputes in which a patentee seeks to block importation of goods into the United States based

on asserted patent rights. The proceedings are nominally against the product, not the manufacturer, and do not provide a damage remedy. ITC cases are heard by administrative law judges. Decisions in the ITC are not binding on district courts, and have no *res judicata* or collateral estoppel effect. *Tex. Instruments v. Cypress Semiconductor Corp.*, 90 F.3d 1558, 1569 (Fed. Cir. 1996).

Patent actions may proceed simultaneously in district court and in the ITC. However, under 28 U.S.C. § 1659, if the respondent seeks a stay in the district court within a designated time period (within 30 days of initiation of the ITC proceeding or 30 days after the district court action is filed, whichever is later), the district court must stay its action with respect to any claim that involves the same issues before both forums pending resolution of the ITC proceeding. Section 1659 requires that the stay continue until the ITC proceeding becomes final and is no longer subject to appeal. *In re Princo Corp.*, 478 F.3d 1345, 1355 (Fed. Cir. 2007).

2.2.6.3 PTO Actions—Re-examination and Re-issue

Anyone can request that the PTO re-examine an issued patent in light of prior art not previously considered, and proceedings will be initiated if the agency decides that a "substantial question of patentability" is presented. This procedure is explained more fully in § 11.2.6.4. The re-examination may result in the patent (or specific claims of the patent) being found valid (or invalid) over the previously unconsidered prior art, or may result in certain claims being narrowed to overcome the newly cited prior art.

Under certain circumstances, a patentee may file an application for a "re-issue" of a patent to correct an error in the patent as issued. See § 11.2.6.3. Section 11.2.6.5 contrasts re-examination and re-issue. The outcome of a re-issue may result in the patent being found invalid or in a re-issued patent with narrower—or broader—claims.

Because the scope and invalidity of a patent in re-examination or re-issue are uncertain, courts frequently stay infringement litigation pending re-examination or re-issue. *See, e.g., In re Cygnus Telecomms. Tech.*, 385 F. Supp. 2d 1022, 1023 (N.D. Cal. 2005); *Teradyne, Inc. v. Hewlett-Packard, Co.*, No. C-91-0344 MHP, 1993 U.S. Dist. LEXIS 14601, at **21-28 (N.D. Cal. Jan. 7, 1993). Re-examination and re-issue proceedings can take anywhere from several months to years to resolve, which can cause hardship to a patent holder alleging infringement. On the other hand, re-examination and re-issue proceedings in the PTO can often "'settle validity disputes more quickly and less expensively than the often protracted litigation involved in such cases,' can aid the trial court in making informed validity decisions, and will ultimately reinforce investor confidence in the patent system by creating a broader opportunity for the PTO to review doubtful patents." *MercExchange, L.L.C. v. eBay, Inc.*, 500 F. Supp. 2d 556, 563 (E.D. Va. 2007) (quoting *Patlex Corp. v. Mossinghoff*, 758 F.2d 594, 602 (Fed. Cir.

1985)). In one recent district court case, statistics and case law cited by both parties "clearly indicated that patent claims are invalidated or modified in over 70% of re-examination proceedings conducted [and] strongly suggest that re-examination generally, though not always, simplifies litigation." *Magna Donnelly Corp. v. Pilkington N. Am., Inc.*, No. 4:06-CV-126, 2007 U.S. Dist. LEXIS 17536, at **10-11 (W.D. Mich. March 12, 2007). A stay pending re-examination or re-issue is always within the court's discretion. *Viskase Corp. v. Am. Nat'l Can Co.*, 261 F.3d 1316, 1328 (Fed. Cir. 2001) (citing *Patlex Corp. v. Mossinghoff*, 758 F.2d 594 (Fed. Cir. 1985)). "In determining whether to grant a stay, courts routinely have considered three factors: (1) whether a stay would unduly prejudice or present a clear tactical disadvantage to the non-moving party; (2) whether a stay will simplify the issues in question and trial of the case; and (3) whether discovery is complete and whether a trial date has been set." *Magna Donnelly*, 2007 U.S. Dist. LEXIS 17536, at *6; *Fresenius Med. Care Holdings, Inc. v. Baxter Int'l, Inc.*, No. C 03-1431 SBA, 2007 U.S. Dist. LEXIS 44107 (N.D. Cal. June 6, 2007); *see also MercExchange*, 500 F. Supp. 2d at 563 (courts consider the stage of discovery, whether a trial date has been set, and whether a stay will unduly prejudice the non-moving party). Stays are less appropriate when the PTO proceedings are initiated late in the litigation. *See, e.g., IMAX Corp. v. In-Three, Inc.*, 385 F. Supp. 2d 1030, 1033-34 (C.D. Cal. 2005); *Gladish v. Tyco Toys*, No. S-92-1666 WBS, 1993 U.S. Dist. LEXIS 20211, at **6-8 (E.D. Cal. 1993). Other factors a court may consider in deciding whether to stay include:

- Whether the outcome of the re-examination or re-issue likely will assist the court in resolving invalidity claims. *See ASCII Corp. v. STD Entm't USA, Inc.*, 844 F. Supp. 1378, 1380-81 (N.D. Cal. 1994).
- Whether the outcome of the re-examination likely will eliminate some or all of the claims asserted in the litigation. *See id.*
- Whether the outcome of the re-examination or re-issue will facilitate settlement. *Magna Donnelly*, 2007 U.S. Dist. LEXIS 17536, at **5-7.

A district court's discretion to stay proceedings does not empower a court to direct that a party file a re-examination or re-issue in the PTO, nor does it empower a court to place conditions on the stay. *Emerson Elec. Co. v. Davoil, Inc.*, 88 F.3d 1051, 1053-54 (Fed. Cir. 1996) (reversing stay conditioned on party's agreement to submit to the PTO documents prepared by the patent litigation defendant).

2.2.7 Rule 11: Pre-Suit Investigations—Objective Good Faith Basis for Filing Pleading

Rule 11 requires that a party filing a complaint have engaged in sufficient investigation to form a good faith basis for its claims. Thus, a patentee is required to

exercise reasonable diligence to ascertain infringement before filing suit. This process must include a reasonable investigation into the interpretation of the claims. *Judin v. United States*, 110 F.3d 780, 784 (Fed. Cir. 1997). But because patents are presumed valid, § 282, a patent holder has no obligation to assess validity prior to filing infringement claims. *See, e.g., Q-Pharma, Inc. v. Andrew Jergens Co.*, 360 F.3d 1295, 1303 (Fed. Cir. 2004); *Vigil v. Walt Disney Co.*, 2000 U.S. App. LEXIS 6231, at **1-2 (Fed. Cir. 2000).

The level of inquiry may vary according to the nature of the allegedly infringing product or process, since some infringement (for example, of software patents) is difficult to ascertain from publicly available information. *Judin v. United States*, 110 F.3d 780, 784 (Fed. Cir. 1997). If an accused product is readily obtainable and easily examined, courts tend to hold that it is reasonable to expect the patent owner to examine it, or have a reasonable explanation for not doing so. *Id.* (holding that patent owner and attorney had acted unreasonably when they had not "attempted to obtain a device from the [defendant] or the manufacturer so that they could more closely observe the device, nor was any attempt made to dissect or 'reverse-engineer' a sample device"); *Refac Int'l Ltd. v. Hitachi Ltd.*, 141 F.R.D. 281, 286 (C.D. Cal. 1991); *c.f. Vista Mfg. Inc. v. Trac-4 Inc.*, 131 F.R.D. 134, 138 (N.D. Ind. 1990) (declining to "recognize a general rule that Rule 11 requires an infringement plaintiff to examine the defendant's product in all instances"). If it is not possible for a patent owner to fully investigate infringement (e.g., the invention is a patented method that the potential defendant may be practicing in secret), Rule 11 permits a party to proceed by specifically identifying in its pleadings those factual contentions that will "likely have evidentiary support after a reasonable opportunity for further investigation or discovery," distinguishing them from those factual contentions that "have evidentiary support . . . ." Fed. R. Civ. P. 11(b)(3).

2.3 Jurisdiction and Venue

2.3.1 Personal Jurisdiction

Personal jurisdiction is analyzed under the familiar two-part test: whether the applicable state long-arm statute is satisfied and whether exercise of personal jurisdiction is consistent with the due process clause of the Constitution. *Silent Drive, Inc. v. Strong Indus., Inc.*, 326 F.3d 1194, 1200, 1201 (Fed. Cir. 2003); *Inamed Corp. v. Kuzmak*, 249 F.3d 1356, 1359-60 (Fed. Cir. 2001). Patent cases typically do not raise substantial issues of personal jurisdiction since the defendant is alleged to have sold or offered for sale infringing product within the district. Personal jurisdiction issues can arise, however, where non-U.S.-based parties are alleged to have infringed.

2.3.2 Subject-Matter Jurisdiction

2.3.2.1 Original Jurisdiction

Under 28 U.S.C. § 1338(a), federal district courts have exclusive original jurisdiction of "any civil action arising under any Act of Congress relating to patents." In *Christianson v. Colt Indus. Operating Corp.*, the Supreme Court held that "cases fall within the Federal Circuit's patent jurisdiction in the same sense that cases are said to "arise under" federal law for purposes of federal question jurisdiction." 486 U.S. 800, 814 (1988) (quotation omitted). Whether cases "arise under" federal law is determined by the familiar "well-pleaded complaint rule." Most decisions that address the rule have dealt with defenses, whether patent-specific (as in *Christianson*) or as a matter of general federal law. *Holmes Group, Inc. v. Vornado Air Circulation Sys., Inc.*, 535 U.S. 826, 831 (2002). In 2002, the Court clarified that whether a claim arises under an act "relating to patents" is to be determined solely on the basis of the complaint and not on any counterclaims, compulsory or otherwise. *Id.*

2.3.2.2 Supplemental Jurisdiction

The jurisdiction of federal district courts extends to state law claims arising out of a patent dispute. A common example of such jurisdiction is a trade secrets cause of action relating to the same technology as the patent cause of action. The supplemental jurisdiction statute provides that "in any civil action of which the district courts have original jurisdiction, the district courts shall have supplemental jurisdiction over all other claims that . . . form part of the same case or controversy under Article III of the United States Constitution." 28 U.S.C. § 1367(a). Accordingly, if a district court has no underlying original jurisdiction (e.g., the plaintiff lacks standing to bring any federal claims), the supplemental state-law claims must be dismissed. *Textile Prods., Inc. v. Mead Corp.*, 134 F.3d 1481, 1485-86 (Fed. Cir. 1998). However, the district courts have discretionary authority to retain supplemental jurisdiction over state-law claims even when the federal claims giving rise to original jurisdiction have been dismissed on the merits. 28 U.S.C. § 1367(c); *Gaia Techs., Inc. v. Reconversion Techs., Inc.*, 104 F.3d 1296, 1297 (Fed. Cir. 1996) (citing *Baker v. Farmers Elec. Coop., Inc.*, 34 F.3d 274, 283 (5th Cir. 1994)), amending 93 F.3d 774, 781 (Fed. Cir. 1996).

2.3.3 Venue

Venue for patent cases is generally governed by 28 U.S.C. § 1391 permitting filing in any district in which infringing activity (broadly defined as making, selling, or offering for sale) has occurred.

2.3.3.1 Venue Transfer Motions

Because most patent cases involve products or services that are available nationally, the patent venue statute generally permits a plaintiff to bring suit in any district. Accordingly, defendants are often sued for infringement in a district in which they have no physical presence, and respond with a motion to transfer venue. "For the convenience of parties and witnesses, in the interest of justice, a district court may transfer any civil action to any other district or division where it might have been brought." 28 U.S.C. § 1404(a). To obtain a change of venue, the defendant has the burden of demonstrating why the forum should be changed. The difficulty of meeting that burden is the subject of some disagreement. In *Gulf Oil Corp. v. Gilbert*, a frequently cited case, the Supreme Court held that "unless the balance is strongly in favor of the defendant, the plaintiff's choice of forum should rarely be disturbed." 330 U.S. 501, 508 (1947), *superseded by statute*, 28 U.S.C. § 1404(a), *as recognized in Quackenbush v. Allstate Ins. Co.*, 517 U.S. 706 (1996). But note that *Gilbert* is a *forum non conveniens* case, not a § 1404(a) case. In *Norwood v. Kirkpatrick*, decided after the enactment of § 1404(a), the Supreme Court held that § 1404(a)'s "words should be considered for what they say, not with preconceived limitations derived from the *forum non conveniens* doctrine," and that § 1404(a) was "intended to permit courts to grant transfers upon a lesser showing of inconvenience" than that required in the *forum non conveniens* context. 349 U.S. 29, 31, 32 (1955) (quotations omitted). In *Humble Oil*, the Fifth Circuit examined the difference between the *forum non conveniens* doctrine (which requires dismissal of a case) and § 1404(a) (which permits only transfers), and held that "the avoidance of dismissal through § 1404(a) lessens the weight to be given" to the plaintiff's choice of venue and that, consequently, "he who seeks the transfer must show good cause." *Humble Oil & Ref. Co. v. Bell Marine Serv., Inc.*, 321 F.2d 53, 56 (5th Cir. 1963). Sitting *en banc*, the Fifth Circuit recently held that

> to show good cause means that a moving party, in order to support its claim for a transfer, must satisfy the statutory requirements and clearly demonstrate that a transfer is "[f]or the convenience of parties and witnesses, in the interest of justice." Thus, when the transferee venue is not clearly more convenient than the venue chosen by the plaintiff, the plaintiff's choice should be respected. When the movant demonstrates that the transferee venue is clearly more convenient, however, it has shown good cause and the district court should therefore grant the transfer.

In re Volkswagen of Am., Inc., 545 F.3d 304, 315 (5th Cir. 2008) (en banc); *see also In re TS Tech USA Corp.*, 551 F.3d 1315, 1321 (Fed. Cir. 2008) (finding that the district court "clearly abused its discretion in denying transfer from a venue with no meaningful ties to the case"). The Fifth Circuit court made clear that the

"good cause" burden "reflects the appropriate deference to which the plaintiff's choice of venue is entitled." 545 F.3d at 315.

In determining whether to transfer venue, courts balance the convenience of the litigants and the public interest in fair and efficient administration of justice. *Id.* The convenience factors include: (1) the relative ease of access to sources of proof; (2) the availability of the compulsory process to secure witnesses' attendance; (3) the willing witnesses' cost of attendance; and (4) all other practical problems that may interfere with the litigation being relatively easy, expeditious, and inexpensive. *Symbol Techs., Inc. v. Metrologic Instruments, Inc.*, 450 F. Supp. 2d 676, 678 (E.D. Tex. 2006). The public factors include: (1) the administrative difficulties flowing from court congestion; (2) the local interest in having local issues decided at home; (3) the forum's familiarity with the governing law; and (4) the avoidance of unnecessary conflict of law problems involving foreign law's application. *Id.* These factors should be considered in light of all the claims and counterclaims alleged in the case; and while courts have traditionally also considered the plaintiff's forum choice (though that by itself was not conclusive or determinative, *In re Horseshoe Entm't*, 337 F.3d 429, 434 (5th Cir. 2003)), the *Volkswagen* decision held that the plaintiff's forum choice was reflected in the moving party's burden to show good cause, suggesting that no separate consideration be given the plaintiff's choice. *Volkswagen*, 5345 F.3d at 315.

2.3.4 Multidistrict Coordination

There are a number of options for managing multiple patent cases between the same parties. Multiple cases pending in the same district are often consolidated (or at least coordinated) before a single judge. Related cases pending in multiple districts may be consolidated by a transfer of venue under 28 U.S.C. § 1404(a). In addition, the Judicial Panel on Multidistrict Litigation is authorized to transfer cases for coordinated or consolidated pretrial proceedings if transfer "will be for the convenience of the parties and witnesses and promote the just and efficient conduct of such actions." 28 U.S.C. § 1407.

When related cases or litigation between the same parties cannot be consolidated, there are still many options available to the district courts to coordinate proceedings. Courts may designate one case the "lead case," or even stay a case until the conclusion of another. Judges may conduct joint hearings or conferences, or jointly appoint special masters under Fed. R. Civ. P. 53. The parties may be required to prepare a joint discovery plan, and protective orders can be drafted to permit discovery from one case being made available in another.

2.4 Scheduling

As in any litigation, the case management conference and scheduling order under Fed. R. Civ. P. 26(f) and 16(b) form the starting point. Scheduling and case management in a patent case must balance the need for efficient identification and resolution of key issues in the case against potentially incomplete development of complex, highly technical issues. As discussed above, in § 2.1, Patent Local Rules adopted in some district courts reflect various approaches to striking this balance. Courts outside these districts should consider whether such rules can be adapted to fit the needs of a specific case, if not a standing order.

Regardless of any Patent Local Rules, scheduling will be optimized if the scheduling order includes dates for:

- disclosure of invalidity and infringement contentions
- last date to disclose intention to rely on advice of counsel as a defense
- last date to add inequitable conduct allegations without leave of court
- close of fact discovery
- claim construction hearing date
- close of expert discovery
- last date for filing and hearing dispositive motions (in most patent cases, both sides will want to file multiple summary judgment motions; see §§ 2.1.1.3 and 5.1), and
- schedule for *Daubert* motions. See § 7.4.2.

Case-specific factors will drive decisions regarding the time necessary to complete each of the above tasks. At the outset of the case, the parties will be more familiar with these unique factors. Therefore, to facilitate preparation of an effective case management order, the court should ask the parties to address each of these issues and to provide a proposed calendar in their Rule 26(f) Joint Case Management Statement.

2.5 Case Management Conference

Effective management of a patent case usually begins with a Case Management Conference pursuant to Rule 26(f). At the conference, the court and parties identify issues relating to the substance of the case and any business considerations that may be influencing the dispute. The court should also establish ground rules that will encourage the parties to minimize acrimony and maximize communication and compromise.

Typically the conference is held off the record, with only counsel in attendance. Informality can promote more productive discussion and compromise. In particularly complex or obviously contentious cases, it may be necessary to conduct the proceedings on the record.

In advance of the initial conference, many courts will issue a form of standing order that applies to patent cases, addressing the matters to be covered in the Joint Case Management Statement, the agenda for the conference, certain aspects of local patent rules and attendant disclosures, and presumptive limitations on discovery. A sample order used in the Eastern District of Texas is attached as Appendix 2-1.

Some courts have found it helpful in patent cases to distribute a very brief "advisory" document to address some of the special aspects of patent litigation, as well as expectations for conduct of the case, beyond what might be found in a typical standing order or local rules. This advisory document may be distributed at, or in advance of, the initial case management conference. Appendices 2-2 and 2-3 contain examples. The court might consider in appropriate cases requiring that lead counsel provide a copy of this advisory to their respective clients.

The following checklists of subjects for initial and subsequent case management conferences should be used as a guide in discussing the case with counsel. Exploring these issues will provide insight into how counsel might be expected to conduct the litigation and whether the case is amenable to early settlement or summary judgment.

Table 2.4
Business and Market Considerations

Issue	Implications
What are the accused products?	Damages. Why certain terms are being disputed in claim construction and the effect of a given interpretation. This information may also affect the scope of discovery.
Do the accused products encompass the accused infringer's entire business, or are they part of a larger line of products?	Can be a factor in injunctions and stays: business-destroying judgments favor stays of execution.
How big is the market for these products (approximate annual sales figures)?	Willingness to litigate to trial. Justification for imposing private costs such as special masters.

Table 2.4
Business and Market Considerations, *continued*

Issue	Implications
Does the plaintiff make a competing product?	Relevant to consideration of injunctive relief. Can complicate damages because of plaintiff's loss of monopoly pricing.
Are there other competitors in the market?	Issue preclusion or *stare decisis* possible if patent owner loses. Damages affected if economic substitutes available.
Have the parties had a prior business relationship? If so, how and when did it end?	Partners who have a history together, or an ongoing relationship, are more amenable to settlement. May be helpful in understanding collateral motivations to sue, and possible avenues to settlement.
What is the financial state of the parties (e.g., what were the companies' prior year profits and what are projected profits)?	See above
Are the parties public companies?	See above
Will injunctive relief put the accused infringer out of business?	See above
How much time remains before the asserted patents expire?	Can affect equitable factors in injunctions and stays.

Table 2.5
Substantive Considerations

Issue	Implications
Is the party asserting the patent(s) the named inventor? If not, how did the party acquire the patent rights? If by license or assignment, when did this occur?	Standing
Is there a dispute about the structure and function of the accused device?	If these points are undisputed then infringement is effectively a question of claim construction, and the case may be handled on a more expedited basis.
Is the technology complex?	The court might require a tutorial or consider appointment of a special master.
Have the asserted patents—or any related patents—been litigated in actions against other parties? If so, what was the outcome?	Other case discovery may be helpful to efficient handling of current litigation. Successful prior assertion of patent can affect validity analysis.
Have the asserted patents—or any related patents—been re-examined in the PTO? If so, what was the outcome? If not, is this something that either party is contemplating?	Outcome of PTO proceedings can affect scope of claims and sometimes damages. Current or planned proceedings at PTO may be grounds for stay of litigation.
If the accused infringer intends to rely on opinion of counsel with attendant waiver of attorney-client privilege, what will be the scope of the waiver?	*See* § 2.2.3.2.2. Early discussion of waiver issue may obviate post-waiver disputes over scope.
Has litigation counsel for the patentee been involved in prosecution of the patents in suit or related patents?	May result in need to depose trial counsel or partners. Raises issues of privilege waiver and possible disqualification.
Discuss how the court intends to address the proper role for and limitations on expert witnesses. *See* § 7.4.1.	Raising these issues early can provide valuable guidelines for the parties in preparing for trial.

Table 2.6
Managing Cooperation Between the Parties and the Potential for Early Resolution

Issue	Implications
Discuss the parties' anticipated scope of discovery. Consider limiting the number of depositions, document requests and/or requests for admission. Consider whether the 25-interrogatory limit under the Federal Rules should be modified.	Efficiency and cost of litigation. More robust discovery planning generally means less call on the court to intervene later in discovery disputes.
Discuss electronic discovery issues.	Encourages early cooperation in complex and costly area; diminishes risk of inadvertent loss of electronic records.
Discuss the patents and claims being asserted. Consider imposing a limit on the number of claim terms to be construed.	Helps parties focus on narrowing issues in the case, reducing the burden on themselves and the court.
Require the parties to meet and confer (at least telephonically) before bringing discovery disputes to the court. Provide stern warnings concerning cooperation and communication.	Reduces the need for court intervention to resolve discovery disputes, which can overwhelm a case if not controlled.
Consider limiting the number of discovery disputes the court will entertain without prior leave.	See above. The court may exercise even more control by requiring leave through a telephonic hearing, either directly or preceded by a very brief exchange of letters.
If the district does not have its own patent local rules, consider adopting the patent local rules of another district (e.g., Eastern District of Texas, Northern District of California). Discuss with the parties ways that such patent local rules might be adapted to best fit the case.	Improves efficiency by eliminating most common discovery disputes. Generally improves forward progress of the case and assures that claim construction and summary judgment motions will be informed.

Table 2.6
Managing Cooperation Between the Parties and the Potential for Early Resolution, *continued*

Issue	Implications
Discuss the timing of summary judgment motions and their relationship to claim construction, and identify any other issues that could potentially give rise to dispositive motions. If so, do these issues require much discovery?	While claim construction may or may not have to be completed before summary judgment process (*see* § 2.1.1.3), other issues may be dispositive. *See* § 6.1.1 for further discussion of issues that might be amenable to early adjudication.
Discuss any restrictions that the court will or might impose on the number of summary judgment.	Can greatly affect the parties' strategies and practices. *See* § 6.1 for guidance on summary adjudication best practices for patent cases.
Discuss how the court will distinguish motions for summary judgment and motions *in limine. See* § 7.1.4.	Reduces burden of premature consideration of in limine motions and tardy consideration of summary judgment motions.
Discuss approaches to mediation. Appoint mediator, or initiate selection process. *See* § 2.6.	Establishes mediation as integral and continuous part of litigation process. Encourages parties to cooperate on information exchange. Enhances chance of early resolution.

2.6 Settlement and Mediation

The vast majority of patent cases (about 96 percent) settle, but typically not until late in the case. In the meantime, the litigation can be extremely expensive for the parties. According to an industry survey, each side can expect to spend from $1.25 to $3 million in fees through the close of discovery.[4] Bringing the case to settlement on the eve of trial also can result in a substantial waste of judicial and company resources. Earlier settlement is usually in everyone's best interest.

Most parties to patent litigation recognize the high economic stakes, uncertainty, and legal costs involved. Nevertheless, various impediments to settle-

4. AIPLA, Report of the Economic Survey 2007 at 25 (2007) (statistics for cases involving more than $1 million at risk).

ment—ranging from the relationships of the particular parties to institutional issues arising out of the nature of some patent litigation—often prevent parties from settling cases without some outside assistance.

To overcome these impediments, courts have evolved techniques to promote dialogue between the parties and, when the circumstances allow, settle them earlier in the litigation. Early judicial intervention, usually at the first case management conference, can be a critical factor in bringing about settlement. Such initiative by the court emphasizes to the parties that the court is interested in assuring they actively consider settlement strategies as well as litigation strategies throughout the case.

Effective judicial encouragement of settlement involves several considerations: (1) appropriate initiation of mediation; (2) selection of the mediator; (3) scheduling of mediation; (4) delineating the powers of the mediator; (5) confidentiality of the mediation process; and (6) the relationship between mediation and litigation activities. Additional considerations come into play with regard to multi-party and multi-jurisdictional cases.

2.6.1 Initiation of the Mediation Process

Many courts require, either by local rules or standardized order, that counsel for the parties discuss how they will attempt to mediate the case before the first case management conference and that they report either their agreed plan or differing positions to the court at the conference. By requiring this early discussion, the court eliminates any concern that the party first raising the possibility of settlement appears weak. This can be particularly important at the outset of a case when attitudes may be especially rigid, posturing can be most severe, and counsel may know little about the merits of their clients' positions.

Whether or not the parties have agreed on a settlement discussion strategy, the court should address the subject at the conference, encouraging the litigants to develop and evolve settlement strategies along with their trial strategies. By making clear the importance the court attaches to the mediation effort and its expectation that the parties will give it similar importance, the court can help assure that settlement efforts receive ongoing attention as the case progresses.

At the case management conference, the court should order that the parties have a first meeting with a specified mediator (or a mediator to be chosen according to a specified process) prior to a fixed deadline. If either party resists mediation, the court should order participation, as it is empowered to do. *See* 28 U.S.C. § 652(a) (Supp. 1998). A party's initial insistence that it will not consent to the mediation, will attend against its will, or has no interest in compromising its rights are positions that reflect more a lack of sophistication than a strategy. Experienced mediators routinely settle cases notwithstanding protestations that "this case can't be settled."

2.6.2 Selection of the Mediator

Courts can identify successful mediators for patent cases from a variety of sources: other judges and magistrate judges, retired judges, professional mediators and practicing lawyers. While in some courts the trial judge serves as mediator, this requires the express consent of the parties. Committee on Codes of Conduct, Judicial Conference of the United States, Code of Conduct for United States Judges Canon 3A(4) (1999). Many judges decline to act in this role, believing that it is difficult to have the requisite candid discussion with parties and their counsel and later objectively rule on the many issues the court must decide. *See Fed. Trade Comm'n v. Freecom Commc'ns, Inc.*, 401 F.3d 1192, 1208 n.9 (10th Cir. 2005) (judges in non-jury cases should be especially hesitant to involve themselves in settlement negotiations); Wayne D. Brazil, Settling Civil Suits: Litigators' Views About Appropriate Roles and Effective Techniques for Federal Judges 84-99 (1985) (noting substantial attorney discomfort with trial judge's involvement in settlement negotiations).

The best choice is usually a professional mediator with a record of successfully resolving patent litigation. A practicing patent attorney may have deeper knowledge of patent law, but that depth of knowledge, particularly in the details of patent prosecution, is unlikely to be useful in the mediation. The most useful attribute is the professional mediator's ability to diffuse discord and build cooperation between the parties. It is important that the parties have confidence that the appointment was based on the mediator's skills and past success. Where the parties agree on a mediator, the court should usually appoint that person so that the authority of the mediator is clear.

To help judges choose mediators, some courts have adopted the practice of asking parties, attorneys, and mediators to evaluate the private mediation process confidentially at the conclusion of cases. This practice also has the advantage of putting mediators on notice that their performance will be monitored by the court. Forms used by the Northern District of Illinois for such an evaluation are attached as Appendices 2.4(a), 2.4(b), and 2.4(c).

2.6.3 Scheduling the Mediation

In scheduling the first meeting with the mediator, the court should take into account the amount of time that the parties will need to come up to speed on the principal issues, strengths, and weaknesses of the case as well as the risks and ramifications of the case for their businesses. Counsel typically reach this level of comprehension by the time that they file *Markman* briefs.

The mediator usually schedules the subsequent mediation sessions. The mediator has greater flexibility in arranging the meetings because, unlike a court, a me-

diator is able to consult with counsel, together or separately, to obtain their views and prepare for the next meeting.

In scheduling mediation sessions, a mediator needs to take into account the progress of the case and how the stages of the litigation may contribute to productive settlement discussions. For example, the mediator may conclude that a session should be held between briefing and hearing claim construction or summary judgment, when positions are fully exposed and the uncertainty of outcome can lead to compromise. In limine, *Daubert* and other pretrial motions create similar opportunities. Substantive mediation preferably occurs before the intense (and expensive) period of trial preparation. Nevertheless, because many cases are settled only in light of the immediate uncertainty of trial, mediation efforts should continue through the pretrial process. Mediation after a jury verdict, but before the resolution of post-trial motions, can also be effective, especially in cases in which legal issues such as inequitable conduct and injunctive relief remain to be resolved.

2.6.4 Powers of the Mediator and Who Should Be Present During Mediation

To maximize the likelihood of successful mediation, the mediator must have the power to require certain actions. Most importantly, the mediator should be empowered to require, or the court should be prepared to order, that the parties participate in the mediation. Participation includes attendance by the most appropriate client representative. The common insistence that someone "with full settlement authority" attend the mediation is insufficient in patent cases because a person with authority does not necessarily have the requisite motivation to engage in meaningful compromise. For the typical corporate business entity, the person with the necessary authority and motivation may be a licensing executive; for the alleged infringer, it may be a manager of the operating unit responsible for the accused product or service whose budget will absorb the costs of the settlement and any judgment. Merely because the litigation is overseen by in-house counsel with authority to settle does not mean that person is the most appropriate party representative.

The mediator may need to resolve disagreements about the relative seniority of party representatives. If litigants are of similar size, this usually is not a problem. But when one company is much smaller—for example, either a start-up competitor or a patent holding company—it likely will be represented by its chief executive officer, and it may attempt to force attendance of the chief executive of the larger entity. This approach can sometimes be counterproductive because it forces participation by someone who lacks sufficient knowledge and resents having to attend. It is more important that the representative of the large entity be someone with responsibility for and knowledge of the relevant portion of that entity's business.

The mediator may also need to address how to obtain approval of a settlement when no one person has settlement authority and any outcome must be approved by a governing board. Where an entity requires board approval of a settlement, the entity is typically represented at the mediation by an individual. If the mediation is successful, the mediator should require that the representative commit to recommend unconditional approval of the settlement to the board and require that the board act by a fixed date.

Another important power for a mediator is the right to exclude particular individuals from the process. For example, one or more of the parties' counsel or an individual, such as an inventor or a technical director, may be too deeply involved in the merits of the dispute to be constructive. Particularly for major cases, it can be useful to require the parties to be represented by attorneys other than lead litigation lawyers, who tend to be preoccupied with the merits and events of the litigation and who sometimes find it difficult to communicate productively with each other.

2.6.5 Confidentiality of the Mediation

To maximize open communication and candor, everything submitted, said, or done during the mediation should be deemed confidential and not be available for use for any other purpose. Confidentiality is usually required by agreement of the parties or by court order or rule. *See, e.g.*, N.D. Cal. Patent Local Rule 6-11 (broadly prohibiting disclosure or use outside the mediation of anything said or done in the mediation). Generally, the confidentiality requirements go beyond the evidentiary exclusion of Fed. R. Evid. 408 and assure that the parties, their counsel, and the mediator can candidly discuss the facts and merits of the litigation without concern that statements might be used in the litigation or publicized. Given the importance of confidentiality to the mediation process, the court should be prepared to enforce these confidentiality guarantees strictly.

This same concern for confidentiality usually precludes reports to the trial judge of anything other than procedural details about the mediation, such as the dates of mediation sessions, or a party's violation of court rules or orders requiring participation. *See* R. Niemic, D. Stienstra & R. Ravitz, Guide to Judicial Management of Cases in ADR at 111-14, 163-64 (Federal Judicial Center 2001) (hereinafter cited as "FJC ADR Guide") ("An attorney-neutral should protect the integrity of both the trial and ADR processes by refraining from communicating with the assigned trial judge concerning the substance of negotiations or any other confidential information learned or obtained by virtue of the ADR process, unless all of the participants agree and jointly ask the attorney-neutral to communicate in a specified way with the assigned trial judge."); Am. Bar Ass'n, Civil Trial Practice Standards § 23e (2007) (hereinafter cited as "ABA Standards") ("The court should not communicate ex parte with any third-party neutral, including a senior, magis-

trate or other judge, involved in an alternative dispute resolution mechanism about the course of negotiations or the merits of the case."). "Public confidence in both the trial and settlement processes can be undermined if direct communication is permitted between the attorney/neutral and the assigned trial judge regarding the merits of the case or the parties' confidential settlement positions." FJC ADR Guide at 164.

2.6.6 Relationship of the Mediation to the Litigation Schedule

Absent a final settlement, a case usually proceeds as scheduled without regard to mediation events. *See* ABA Standards § 23(f) (2007) ("The court ordinarily should not delay proceedings or grant continuances to permit the parties to engage in settlement negotiations.") This approach assures that the litigation is not unnecessarily delayed and encourages the parties to mediate diligently.

Arranging early discovery of needed information or scheduling early consideration of a potentially important summary judgment motion may make it possible for the parties to consider settlement earlier in the case. The patent owner, for example, may believe it needs software code, chemical formulation details, or other information not available by buying or using the infringing product or service. Alternatively, the parties may dispute the existence of an invalidating prior sale of the patented invention. This scheduling can be facilitated by the mediator at an early meeting with the parties.

Mediation is sometimes held while a critical case event is pending—for example, after the briefing and hearing of a preliminary injunction or summary judgment motion, but before the court decides the motion. In some courts, judges and mediators regularly communicate about scheduling to maximize these settlement opportunities. By providing the parties with an expected schedule for deciding the motion, the court can encourage them to focus on completing a settlement before the deadline. If the parties are productively engaged in mediation at the deadline, some judges continue to delay issuing a decision where the mediator and the parties so request.

2.6.7 Mediating Multi-Party and Multi-Jurisdictional Cases

Not all patent cases involve a single plaintiff and defendant in a single court. When in the typical multi-party case the patent owner asserts that the alleged infringers acted independently, separate mediation meetings can be scheduled for each alleged infringer. This allows the opportunity to negotiate settlements with each defendant based upon the unique facts and market forces relevant to that party. It also allows the defendants interested in settling early to mediate without the interference of others who may wish to litigate the dispute through a later stage of the case.

Multi-jurisdictional cases often arise when a party sued on a patent brings a countersuit against the plaintiff in another court, asserting infringement of its own patent. In some circumstances, however, parties may find themselves in unrelated patent litigation in multiple courts because different business units of at least one of the parties have proceeded independently.

Settlement efforts normally should not be delayed in one court because of proceedings in another court. The parties should be required to comply with the court's usual mediation planning requirements. If the parties report active engagement in mediation in another jurisdiction, the court can delay ordering further mediation while they complete those efforts. In the mediation of multi-jurisdictional suits, the parties will make clear the scope of settlement they are prepared to negotiate. If the multiple cases are countersuits, cases in both courts will be settled. If the separate suits are the result of the independent actions of separate business units, one party may assert that the second suit will not be part of any settlement. Should its opponent disagree, the mediator will have to determine the advantage of forcing discussion of the second suit—likely requiring the attendance of party representatives of the second business unit—or focusing the discussions on the single case.

2.6.8 Factors Affecting the Likelihood of Settlement of Particular Categories of Cases

Like other aspects of patent litigation, settlement dynamics vary depending upon the nature of the parties. While every case involves a multitude of individual settlement issues, categories of cases also reflect common pathologies. The following chart summarizes the settlement issues and patterns associated with the most common types of patent disputes and provides insights into how and when settlement can be most effectively fostered:

Table 2.7
Settlement Considerations

Case Category	**Settlement Issues**
Competitor vs. Competitor—Core Technology	Difficult to settle absent a counterclaim or other significant risk to the patent owner or strategic opportunity available from business agreement. Meaningful mediation likely to require participation from senior officers of the parties. Agreement may present antitrust issues if the parties have large cumulative market share.
Competitor vs. Competitor—Non-Core Technology	Likely to settle through mediation, potentially early in the litigation. Litigation may be the result of failed effort to negotiate license prior to litigation, with litigation intended to add additional negotiating leverage.
Large Enterprise vs. Start-up/New Entrant	If no other competitor offers substantial equivalents of claimed patented technology, the established company may not settle without eliminating start-up's use of technology. The suit nevertheless may raise costs for the start-up to the point of forcing a settlement, potentially including acquisition of the start-up. If other competitors exist, settlement is likely, potentially early in litigation. Suit may be timed to critical event for start-up (*e.g.*, new product offering, additional investment, public stock offering, or merger), in which case potential windows for settlement are very early in the litigation or just after the event.

Table 2.7
Settlement Considerations, *continued*

Case Category	Settlement Issues
Licensing Company vs. Large Enterprise	The likelihood and timing of settlement depends on several factors: (1) the amount demanded—for example, the licensing company may intend future litigation against others and is seeking to build necessary funding through the current suit, in which case the demand may be modest and early settlement possible; (2) the size of the licensing company's portfolio—if the current suit likely is the first of several expected, a license to the patentee's entire portfolio can be an attractive settlement; (3) reputational effects: whether the large enterprise had or expects litigation with the patent owner or other licensing companies—several large companies believe, sometimes based on policy, settling such suits encourages additional licensing company litigation, in which case settlement will be possible, if at all, only after substantive rulings create a substantial risk of an adverse outcome; and, (4) strategic alliances: whether the licensing company and large enterprise can join forces against the defendant's competitors—a settlement, potentially early in the litigation, may be based on an agreement allowing the enterprise to use the licensing company's portfolio against its competitors.
Licensing Company vs. Start-up Enterprise	Such suits often are timed to critical events for the start-up. Very early settlement or settlement after the start-up accomplishes the event is likely. Obtaining participation from senior start-up company officers while the critical event is pending can be difficult and may justify telephone or other non-traditional participation in the mediation.

Table 2.7
Settlement Considerations, *continued*

Case Category	Settlement Issues
Serial Litigant: Patent Owner vs. First Alleged Infringer	Such patent owners face the collateral risk that an adverse *Markman* or other substantive ruling dooms not just this case, but the entire flotilla behind it. On the other hand, while a win cannot be used as collateral estoppel in subsequent suits, it can be persuasive in them, especially if they are brought in the same court. This may create settlement opportunities while important substantive rulings are pending.
Pharmaceutical vs. Pharmaceutical	Difficult, and often impossible, cases to settle, as industry economics are based on an exclusive position in marketing patent-protected drugs.
Pharmaceutical vs. Generic	Often based on Hatch-Waxman Act provisions which grant the generic a 180-day period of exclusivity after it enters the market. 21 U.S.C. § 355(j)(5)(B)(iv). Reagrding Hatch-Waxman litigation generally, see Chapter 10. Because delaying actual market entry by the generic delays entry by all generics and because the economic loss to the pharmaceutical company after entry usually far exceeds profit to the generic, some of these cases have been settled by "reverse payments," payments by the pharmaceutical company to the generic to remain off the market for a period of time. Such settlements have been approved by appellate courts so long as the exclusion is no greater than the exclusionary potential of the pharmaceutical company's patent, but continue to be challenged by the Federal Trade Commission as anticompetitive. *See Joblove v. Barr Labs, Inc.*, 429 F.3d 370 (2d Cir. 2005), *amended*, 466 F.3d 187 (2006), *cert. denied*, 127 S. Ct. 3001 (2007); *Schering-Plough Corp. v. FTC*, 402 F.3d 1056 (11th Cir. 2005), *cert. denied*, 126 S. Ct. 2929 (2006).
Medical Device Industry	Historically an industry with a large amount of patent litigation, so it is likely the litigants have a history of litigation against each other; they may have other related or unrelated litigation in other courts and they may have patent portfolios that threaten future litigation. Early settlement of the litigation is unlikely. Otherwise, like other "Competitor vs. Competitor" litigation (above), settlement will depend on whether the technology is "core" to a significant product.

Table 2.7
Settlement Considerations, *continued*

Case Category	Settlement Issues
Preliminary Injunction Motion	Motions for preliminary injunction present an opportunity for very early consideration of settlement: counsel quickly become knowledgeable, parties focus early on strengths and weaknesses, and there is a period early in the case while a potentially important ruling is pending.

Appendix 2.1
Scheduling Order, Eastern District of Texas

IN THE UNITED STATES DISTRICT COURT
FOR THE EASTERN DISTRICT OF TEXAS

	§	
	§	
Plaintiff,	§	
	§	
v.	§	**CIVIL ACTION NO.**
	§	**CIVIL ACTION NO.**
	§	
	§	
	§	
	§	
	§	
Defendants.	§	

SCHEDULING ORDER

(Patent Cases)

The Court, after considering the joint attorney conference report and after reviewing the case file, enters this case specific order which controls disposition of this action pending further order of the Court. The following actions shall be completed by the date indicated.[1]

DEADLINES

March 17, 2008	Mandatory Disclosures Required by F.R.C.P. 26(a)(1)(A) and the Court's Order Governing Proceedings must be initiated and served.
March 24, 2008	P.R. 3-1 Disclosure of Asserted Claims and Infringement Contentions (and P.R. 3-2 document production) to be served.

[1]If a deadline falls on a Saturday, Sunday, or a legal holiday as defined in Fed. R. Civ. P. 6, the effective date is the first federal court business day following the deadline imposed. All deadlines shall be as of 4:00 p.m., on the day specified. If delivery of a document or other item is required, and counsel chooses to mail the same, it shall be deposited, properly addressed and postage pre-paid, in a mailbox or at a post office, at least three (3) days before the indicated deadline, on a day mail is scheduled to be picked up by the postal service at that location, and at a time before the last scheduled pickup.

Scheduling Order (Patent Cases) Rev. 10/11/07

April 11, 2008	Join Additional Parties
April 14, 2008	P.R. 3-3 Invalidity Contentions (and P.R. 3-4 document production) to be served. **To extent not already required to be disclosed, exchange Mandatory Disclosures.**
April 24, 2008	Disclosure of source code, if applicable. *See* P.R. 3-1(g).
April 25, 2008	Privilege Logs to be exchanged by parties (or a letter to the Court stating that there are no disputes as to claims of privileged documents).
April 28, 2008	Parties to exchange proposed terms for construction and identify any claim element governed by 35 U.S.C. § 112, ¶ 6 (P.R. 4-1).
May 8, 2008	Parties to exchange preliminary proposed claim construction and extrinsic evidence supporting same (P.R. 4-2). To the extent a party's extrinsic evidence includes expert opinion, the party shall provide an expert witness report, to include all information set out , in Rule 26(a)(2)(b), except that the report need only address the opinions that the expert intends to present at the claims construction hearing. Nothing in this report shall preclude the parties from filing the expert reports due on December 3, 2008 and/or December 22, 2008.
May 26, 2008	P.R. 3-1(g) Disclosure of Asserted Claims and Infringement Contentions (and P.R. 3-2 document production) to be served. *See* P.R. 3-1(g).
June 9, 2008	Parties' Final Amended Pleadings **(It is not necessary to file a Motion for Leave to Amend before the deadline to amend pleadings except to the extent the amendment seeks to add a new patent in suit).**
June 17, 2008	Completion date for discovery on claim construction (P.R. 4-4).

June 25, 2008	Joint Claim Construction and Prehearing Statement to be filed (P.R. 4-3). Provide an estimate of how many pages are needed to brief the disputed claims.
June 26, 2008	P.R. 3-3(e) Supplemental "Invalidity Contentions" to be served. *See* P.R. 3-3(e).
June 26, 2008	Respond to Amended Pleadings
July 24, 2008	Opening claim construction brief (P.R. 4-5(a)).
July 31, 2008	Responsive claim construction brief (P.R. 4-5(b)).
July 31, 2008	Submit technology synopsis.
August 7, 2008	Reply claim construction brief (P.R. 4-5(c)).
August 14, 2008	Parties to file joint claim construction and chart (P.R. 4-5(d)). Parties shall work together to agree on as many claim terms as possible.
September 22, 2008	Possible tutorial at 10:00 a.m.
September 24, 2008	Claim construction hearing
November 5, 2008	Provide Initial Mandatory Disclosures of information directed solely to damages. Deadline for Initial Mandatory Disclosure of all persons, documents, data compilations and tangible things, which are relevant to a claim or defense of any party and which has not previously been disclosed. This deadline is not an extension of earlier deadlines set out in this court's order or the Patent Rules, nor an excuse to delay disclosure of information. It is a "catchall" deadline for provision of all remaining information which may be relevant to a claim or defense of any party at trial.
December 3, 2008	Parties with burden of proof to designate Expert Witnesses other than claims construction experts and provide their expert witness reports, to include for ALL experts all information set out in Rule 26(2)(B).
December 3, 2008	Comply with P.R. 3-7. (Designation of Wilfulness Opinions).

December 22, 2008	Parties to Designate Expert Witnesses on issues for which the parties do not bear the burden of proof, and provide their expert witness report, to include for ALL experts all information set out in Rule 26(2)(B).
January 11, 2009	File Dispositive Motions and any other motions that may require a hearing. Regardless of how many dispositive motions a party files, each party is limited to a total of sixty pages for such motions. Each individual motion shall comply with Local Rule CV-7. **Responses to motions shall be due in accordance with Local Rule CV-7(e).** **Note: Objections to any expert, including Daubert motions, shall be filed within 3 weeks after the expert's Report has been disclosed. Such objections and motions are limited to ten pages each.**
January 31, 2009	Discovery Deadline. All discovery must be served in time to be completed by this date.
March 23, 2009	Counsel and unrepresented parties are each responsible for contacting opposing counsel and unrepresented parties to determine how they will prepare the Joint Final Pretrial Order (*See* Local Rule CV-16(b) and Proposed Jury Instructions and Verdict Form (or Proposed Findings of Fact and Conclusions of Law in nonjury cases).
March 30, 2009	Motions in limine due File Joint Final Pretrial Order. See Local Rules Appendix D (Obtain form for Exhibit List from District Clerk's Office, or create an Exhibit List form that mirrors the District Clerk's form). Exchange Exhibits and deliver copies to the court. At this date, all that is required to be submitted to the court is a hyperlinked exhibit list on disk (2 copies) and no hard copies
April 6, 2009	Notice of intent to offer certified records
April 13, 2009	Video Deposition Designation due. Each party who proposes to offer a deposition by video shall serve on all other parties a disclosure identifying the line and page numbers to be offered. All other parties will have seven calendar days to serve a response with any objections and

	requesting cross examination line and page numbers to be included. Counsel must consult on any objections and only those which can not be resolved shall be presented to the court. The party who filed the initial Video Deposition Designation is responsible for preparation of the final edited video in accordance with all parties designations and the court's rulings on objections
April 13, 2009	Response to motions in limine due.[2] File objections to witnesses, deposition extracts, and exhibits, listed in pre-trial order.[3] (This does not extend the deadline to object to expert witnesses). If numerous objections are filed the court may set a hearing prior to docket call. File Proposed Jury Instructions/Form of Verdict (or Proposed Findings of Fact and Conclusions of Law).
May 11, 2009	Docket call and Final Pretrial at 1:30 p.m. Date parties should be prepared to try case. Provide court with two copies of most updated Exhibit list. Absent agreement of the parties, this should not have exhibits which were not listed in the Final Pre- Order, but may have some deletions depending on rulings on objections. At this date, the parties should be prepared to give the Deputy Clerk one hard copy of the exhibits.
May 18, 2009	10:30 a.m. Jury Selection and Trial. Case will then be tried in order with other cases on the docket. (Depending on disposition of other cases on the court's docket, jury selection may be the following week. The court will notify counsel as soon as possible if this is required.

[2] This is not an invitation or requirement to file written responses. Most motions in limine can be decided without a written response. But, if there is particularly difficult or novel issue, the Court needs some time to review the matter. To save time and space, respond only to items objected to. All others will be considered to be agreed. Opposing counsel **shall meet and confer** in an attempt to resolve any dispute over the motions in limine within five calendar days of the filing of any response. The parties shall notify the court of all the issues which are resolved.

[3] Within five calendar days after the filing of any objections, opposing counsel **shall meet and confer** to determine whether objections can be resolved without a court ruling. The parties shall notify the court of all issues which are resolved. The court needs a copy of the exhibit or the pertinent deposition pages to rule on the objection.

The court's modifications to P.R. 3-1 and P.R. 3-3 are set out below**:**

> **P.R. 3-1(g)**: If a party claiming patent infringement asserts that a claim element is a software limitation, the party needs only to identify the elements as a software limitation in its initial compliance with P.R. 3-1, but does not need to identify where such limitation is met in the Accused Instrumentality. At the latest, the party opposing a claim of patent infringement shall produce source code within 30 days of the initial P.R. 3-1 disclosures. After receipt of the source code for the Accused Instrumentality, the party is permitted 30 days to supplement P.R. 3-1 disclosure to identify, with specificity, the source code of the Accused Instrumentality that allegedly satisfies the software claim elements. The party claiming patent infringement shall identify, on an element-by-element basis for each asserted claim, what source code of each Accused Instrumentality allegedly satisfies the software limitations of the asserted claim elements. This is not an invitation for the party opposing a claim of patent infringement to delay in producing source code. P.R. 3-1(g) does not allow Plaintiff the opportunity to modify or amend any non-software claim contentions.
>
> **P.R. 3-3(e)**: If a party claiming patent infringement exercises the provisions of P.R. 3-1(g), the party opposing a claim of patent infringement may serve, not later than 30 days after receipt of a P.R. 3-1(g) disclosure, supplemental "Invalidity Contentions" that amend only those claim elements identified as software limitations by the party claiming patent infringement.

SCOPE OF DISCOVERY

Modification. Taking into account the needs of the case, the amount in controversy, the parties' resources, the importance of the issues at stake in the litigation, and the importance of the proposed discovery in resolving the issues, the Court modifies the parameters of discovery in the following respects. *See* Fed. R. Civ. P. 26(b)(2)(iii).

Case specific disclosure. The parties shall disclose the information required by the Order Governing Proceedings, the Patent Rules of this court, and this Scheduling Order.

A party that fails to timely disclose such information is not, unless such failure is harmless, permitted to use such evidence at trial, hearing or in support of a motion. In addition to or in lieu of such sanction, the Court may impose other appropriate sanctions, including the payment of reasonable expenses and attorney's fees.

Depositions. Given the extensive disclosures required without a request from opposing party, absent further order of this court, discovery with respect to the patent issues is limited to the disclosures required by this court's orders and the Patent Rules, together with 45 interrogatories, 60 requests for admissions, and depositions on written questions of custodians of business records for third parties. "Side" means a party or a group of parties with a common interest. Absent court order, all depositions shall be taken in compliance with Fed. R. Civ. P. 30(d) and Local Rule CV-30, except that the total time allotted for the depositions with respect to the patent issues is 60 hours per side for all witnesses, whether the time is used in direct examination or cross-examination. Absent agreement of the parties or order of this court, no deposition shall last longer than seven (7) hours, except that the deposition of the named inventor may last up to ten hours, if reasonably needed. Reasonable breaks for lunch and otherwise will not count toward the hour limit of Rule 30(d)(2).

In connection with all productions of foreign language documents, the producing party will produce the documents in the original language. Any existing English language translation, whether or not created for the purpose of this case, must also be produced.

Electronic Discovery. The parties shall produce information in the format which they are normally used and maintained by the party. Documents can be scanned and produced electronically at the option of the producing party. However, the original of any document produced electronically can be inspected by the receiving party upon request.

The parties are excused from the pretrial disclosure requirements set forth in Federal Rule of Civil Procedure 26(a)(3)as such disclosure is cumulative of this Court's pre-trial order procedures.

The parties are excused from the pretrial disclosure requirements set forth in Federal Rule of Civil Procedure 26(a)(3)as such disclosure is cumulative of this Court's pre-trial order procedures.

COMPLIANCE

A party is not excused from the requirements of this scheduling order by virtue of the fact that dispositive motions are pending, the party has not completed its investigation, the party challenges the sufficiency of the opposing party's disclosure or because another party has failed to comply with this order or the rules.

TRIAL

Jurors are performing a public service, which is usually inconvenient to them, and may be at great personal expense. Once the jury is seated, every effort will be made to present the case professionally, efficiently, and without interruption. The deadlines for pre-trial matters, such as exchanging exhibits, and objections, are intended to reduce the need for trial objections, side-bar conferences, and repetitive presentation of evidentiary predicates for clearly admissible evidence. Counsel should be familiar with the evidence display system available in the courtroom. Copies of exhibits which will be handed to witnesses should be placed in a three ring binder, with an additional copy for the court.

Counsel are responsible for informing their clients and witnesses about courtroom dress requirements and protocol, such as silencing pagers and phones, and not chewing gum, reading newspapers, or eating.

OTHER MATTERS

1. Please note the amendments to the Local Rules regarding motion practice. These supersede Appendix B of the Order Governing Proceedings, except that the court still requests that courtesy copies over twenty pages long be bound to the left.

2. If the parties agree they want to mediate, they should notify the court if assistance is needed in selecting a mediator.

So **ORDERED** and **SIGNED** this day of

_____

United States District Judge

Appendix 2.2
Draft Advisory Statement

DRAFT ADVISORY STATEMENT

[INSERT COURT AND CAPTION]

The Court issues this Advisory Statement to inform counsel and the parties of the unusual aspects of patent litigation and its impact on the Court's available resources.

The Court handles hundreds of cases at any given time, and patent litigation accounts for only a small fraction of the total. However, experience shows that patent cases consume a much larger portion of the Court's time and attention. While parties involved in such disputes, because of the high stakes involved, seem at times to have unlimited resources, this Court has only two clerks. Therefore, counsel are expected to exercise their utmost restraint and judgment, avoiding unnecessary motions and excessive briefing, and setting priorities for the issues they wish to present for resolution.

Where despite best efforts voluminous documents must be filed, counsel should be especially careful to provide in their briefing appropriate summaries, highlighting the issues and arguments that are most likely to affect the outcome.

The Court expects [lead][local] counsel to certify, in connection with any motion or request for permission to file a motion, other than case dispositive motions, that they have conferred in person in an attempt to resolve the dispute.

Two areas of patent litigation that can benefit from close management are discovery and summary judgment. Accordingly, this Court has adopted practices designed to improve their efficiency. Discovery motions will not accepted for filing without the Court's permission, following submission of one letter per side, not exceeding two pages, describing the dispute, and a telephonic hearing arranged with the Clerk. Similarly, summary judgment motions will be filed only with the Court's permission, after submission of proposal and opposition letters, not to exceed five pages each. Such letters will be submitted in advance of a telephonic hearing, according to the dates established in the Case Schedule.

Earlier setting of summary judgment motions will be allowed only in the event that it appears very likely that one or more claim construction issues will be determinative of all patent claims brought by either party. That standard must be established in an exchange of letters according to the normal procedure for summary judgment motions. A telephone hearing will be scheduled if the Court deems it would be helpful.

The process for claim construction, other than for case-dispositive summary judgment motions, is reflected in this Court's Standing Orders and the Case Schedule. Counsel are reminded of their responsibility to meet and confer in good faith to identify

and present for determination only those claim terms that will have a material effect on resolution of the merits. The Court will not consider more than ten terms at the claim construction hearing, unless permission is granted in advance for good cause shown. As part of the Joint Claim Construction Statement the parties are required to explain the relevance of each proposed term; in their briefing counsel are advised to expand on this explanation.

Motions in limine will be presented with the Joint Pretrial Statement. One submission per side will be accepted, with the issues presented as separate paragraphs in a single document. Counsel are advised to present in limine motions in descending order of importance, since the Court will not consider and rule on an unlimited number of such requests.

Appendix 2.3
Protective Order, Eastern District of Texas

IN THE UNITED STATES DISTRICT COURT
FOR THE EASTERN DISTRICT OF TEXAS

	§
	§
	§
V.	§
	§
	§
	§

PROTECTIVE ORDER

The Court, *sua sponte*, issues this Protective Order to facilitate document disclosure and production under the Local Rules of this Court and the Federal Rules of Civil Procedure. Unless modified pursuant to the terms contained in this Order, this Order shall remain in effect through the conclusion of this litigation.

In support of this order, the court finds that:

1. Documents or information containing confidential proprietary and business information and/or trade secrets ("Confidential Information") that bear significantly on the parties' claims or defenses is likely to be disclosed or produced during the course of discovery in this litigation;

2. The parties to this litigation may assert that public dissemination and disclosure of Confidential Information could severely injure or damage the party disclosing or producing the Confidential Information and could place that party at a competitive disadvantage;

3. Counsel for the party or parties receiving Confidential Information are presently without sufficient information to accept the representation(s) made by the party or parties producing

Confidential Information as to the confidential, proprietary, and/or trade secret nature of such Confidential Information; and

4. To protect the respective interests of the parties and to facilitate the progress of disclosure and discovery in this case, the following Order should issue:

IT IS THEREFORE ORDERED THAT:

1. Documents or discovery responses containing Confidential Information disclosed or produced by any party in this litigation are referred to as "Protected Documents." Except as otherwise indicated below, all documents or discovery responses designated by the producing party as "Confidential" and which are disclosed or produced to the attorney's for the other parties to this litigation are Protected Documents and are entitled to confidential treatment as described below.
2. Protected documents shall not include (a) advertising materials, (b) materials that on their face show that they have been published to the general public, or (c) documents that have submitted to any governmental entity without request for confidential treatment.
3. At any time after the delivery of Protected Documents, counsel for the party or parties receiving the Protected Documents may challenge the Confidential designation of all or any portion thereof by providing written notice thereof to counsel for the party disclosing or producing the Protected Documents. If the parties are unable to agree as to whether the confidential designation of discovery material is appropriate, the party or parties receiving the Protected Documents shall certify to the Court that the parties cannot reach an agreement as to the confidential nature of all or a portion of the Protected Documents. Thereafter, the party or parties disclosing or producing the Protected Documents shall

have ten (10) days from the date of certification to file a motion for protective order with regard to any Protected Documents in dispute. The party or parties producing the Protected Documents shall have the burden of establishing that the disputed Protected Documents are entitled to confidential treatment. If the party or parties producing the Protected Documents do not timely file a motion for protective order, then the Protected Documents in dispute shall no longer be subject to confidential treatment as provided in this Order. All Protected Documents are entitled to confidential treatment pursuant to the terms of this Order until and unless the parties formally agree in writing to the contrary, a party fails to timely move for a protective order, or a contrary determination is made by the Court as to whether all or a portion of a Protected Document is entitled to confidential treatment.

4. Confidential Treatment. Protected Documents and any information contained therein shall not be used or shown, disseminated, copied, or in any way communicated to anyone for any purpose whatsoever, except as provided for below.

5. Protected Documents and any information contained therein shall be disclosed only to the following persons ("Qualified Persons"):

   (a) Outside counsel of record in this action for the party or party receiving Protected Documents or any information contained therein;

   (b) Employees of such counsel (excluding experts and investigators) assigned to and necessary to assist such counsel in the preparation and trial of this action; and

   (c) The Court.

   Protected documents and any information contained therein shall be used solely for the prosecution of this litigation.

6. Outside counsel of record for the party or parties receiving Protected Documents may create an index of the Protected Documents and furnish it to attorneys of record representing or having represented parties involved in litigation involving the claims alleged in this suit against the party or parties disclosing or producing the Protected Documents. The index may only identify the document, date, author, and general subject matter of any Protected Document, but may not reveal the substance of any such document. Counsel for the party or parties receiving Protected Documents shall maintain a current log of the names and addresses of persons to whom the index was furnished.
7. The term "copy" as used herein means any photographic, mechanical or computerized copy or reproduction of any document or thing, or any verbatim transcript, in whole or in part, of such document or thing.
8. To the extent that Protected Documents or information contained therein are used in depositions, such documents or information shall remain subject to the provisions of this Order, along with the transcript pages of the deposition referring to the Protected Documents or information contained therein.
9. Any court reporter or transcriber who reports or transcribes deposition testimony in this action shall agree that all "confidential" information designated as such under this Order shall remain "confidential" and shall not be disclosed by them, except pursuant to the terms of this Order, and that any notes or transcriptions of such deposition testimony (and any accompanying exhibits) will be retained by the reporter or delivered to counsel of record.

10. Inadvertent or unintentional production of documents or information containing Confidential Information which are not designated "confidential" shall not be deemed a waiver in whole or in part of a claim for confidential treatment.

11. The party or parties receiving Protected Documents shall not under any circumstances sell, offer for sale, advertise, or publicize Protected Documents or any information contained therein.

12. After termination of this litigation, the provisions of this Order shall continue to be binding, except with respect to those documents and information that become a matter of public record. This Court retains and shall have continuing jurisdiction over the parties and recipients of the Protected Documents for enforcement of the provisions of this Order following termination of this litigation.

13. Upon termination of this action by dismissal, judgment, or settlement, counsel for the party or parties receiving Protected Documents shall return the Protected Documents to the counsel for the party or parties disclosing or producing the Protected Documents. The party or parties receiving the Protected Documents shall keep their attorney work product which refers or relates to any Protected Documents. Attorney work product may be used in subsequent litigation provided that such use does not disclose Protected Documents or any information contained therein.

14. This Order shall be binding upon the parties and their attorneys, successors, executors, personal representatives, administrators, heirs, legal representatives, assigns, subsidiaries, divisions, employees, agents, independent contractors, or other persons or organizations over which they have control.

15. The Court anticipates that the parties may file a motion to modify the terms hereof with respect to the sharing of Protected Documents with experts and consultants; shifting the cost burden of production equitably; and other terms that may be reasonably required to protect a party as provided in Rule 26(b) or (c) of the Federal Rules of Civil Procedure. So ORDERED AND SIGNED this _____ day of _____ .

_____

United States District Judge

Appendix 2.4(a)
Mediation Evaluation Form for Attorneys, Northern District of Illinois

U.S. DISTRICT COURT
NORTHERN DISTRICT OF ILLINOIS (WESTERN DIVISION)
MEDIATION EVALUATION FORM
-- For Attorneys --

Please promptly fill out this form after the mediation conference and return it to the ADR Administrator via fax at 815-987-4291. No case identification will be associated with these responses for purposes other than program evaluation.

Name of Mediator: _____

Case Number: _____

Date of Mediation: _____ Type of Case: _____

Outcome: [ ] settled [ ] partially settled [ ] not settled [ ] continued for further mediation

Number of mediation sessions held: _____ Number of hours spent in mediation: _____

Are you the [ ] defendant's attorney [ ] plaintiff's attorney

Number of cases in which you have participated in mediation prior to this one: _____

1. On a scale of 1 – 5 (1 = strongly disagree, 2 = disagree, 3 = neither agree nor disagree, 4 = agree, 5 = strongly agree), please respond to the following:

	SD	D	N	A	SA
a) The mediator was well-prepared for the mediation:	1	2	3	4	5
b) My client(s) and I understood the mediation process after it was explained:	1	2	3	4	5
c) The mediator helped the parties to generate options:	1	2	3	4	5
d) The mediator effectively moved the parties toward settlement:	1	2	3	4	5
e) The mediator was knowledgeable about the law in this case:	1	2	3	4	5
f) The mediation helped narrow or clarify the issues involved in this case:	1	2	3	4	5
g) Overall, I am satisfied with the mediation process:	1	2	3	4	5
h) The process was fair to all parties:	1	2	3	4	5
i) Overall, I am satisfied with what was accomplished in the mediation:	1	2	3	4	5
j) Overall, I am satisfied with the agreement (if reached):	1	2	3	4	5

2. Overall, how helpful or detrimental was the mediation in the resolution of this case?
   1. [ ] Very helpful
   2. [ ] Somewhat helpful
   3. [ ] It had little impact on the case
   4. [ ] Somewhat detrimental
   5. [ ] Very detrimental

3. The overall length of mediation was: [ ] too long [ ] too short [ ] about right

4. Did the mediator appear to have a bias for the [ ] Plaintiff? [ ] Defendant? [ ] No Bias

5. Do you think the assignment of this case to mediation:
   [ ] Facilitated (or will facilitate) its early resolution
   [ ] Will increase time to resolution
   [ ] Will have no impact on time to resolution

6. Do you think the assignment of this case to mediation:
   [ ] Has reduced (or will reduce) litigation costs to your client
   [ ] Will increase litigation costs to your client
   [ ] Will have no effect on costs to your client

7. If the case did not settle, why not?
_____
_____

8. Would you be willing to use mediation again?
   [ ] Yes [ ] No

   Why or why not? _____
   _____

9. Would you be willing to use *this* mediator again?
   [ ] Yes [ ] No

   Why or why not? _____
   _____

10. Comments on the mediator or the mediation process:

Appendix 2.4(b)
Mediation Evaluation Form for Mediators, Northern District of Illinois

U.S. DISTRICT COURT
NORTHERN DISTRICT OF ILLINOIS (WESTERN DIVISION)
MEDIATION EVALUATION FORM
-- For Mediators --

Please fill out this form and return it to the ADR Administrator via fax at 815-987-4291 within 10 days of the mediation session. No case identification will be associated with these responses for purposes other than program evaluation.

Name: _____

Case Number: _____

Date of Mediation: _____ Type of Case: _____

Outcome: [ ] settled [ ] partially settled [ ] not settled [ ] continued for further mediation

Number of cases for which you have acted as mediator prior to this one: _____

1. On a scale of 1 – 5 (1 = strongly disagree, 2 = disagree, 3 = neither agree nor disagree, 4 = agree, 5 = strongly agree), please respond to the following:

	SD	D	N	A	SA
a) This case was appropriate for mediation:	1	2	3	4	5
b) This case was referred to mediation at the appropriate time:	1	2	3	4	5
c) The lawyers were prepared for the mediation:	1	2	3	4	5
d) The litigants were prepared for the mediation:	1	2	3	4	5
e) The litigants were actively involved in the mediation:	1	2	3	4	5
f) The mediation helped narrow or clarify the issues involved in this case:	1	2	3	4	5
g) I have expertise in this type of dispute:	1	2	3	4	5
h) Overall, I am satisfied with what was accomplished in the mediation:	1	2	3	4	5

2. Overall, how helpful or detrimental was the mediation in the resolution of this case?
   1. [ ] Very helpful
   2. [ ] Somewhat helpful
   3. [ ] It had little impact on the case
   4. [ ] Somewhat detrimental
   5. [ ] Very detrimental

3. The overall length of mediation was: [ ] too long [ ] too short [ ] about right

4. Do you think the assignment of this case to mediation:
   [ ] Helped the case resolve *more quickly*
   [ ] Will *increase* the time it takes to resolve the case
   [ ] Will have *no effect* on the time it takes to resolve the case

5. Do you think the assignment of this case to mediation:
   [ ] Has *reduced* (or will reduce) litigation costs to the parties
   [ ] Will *increase* litigation costs to the parties
   [ ] Will have *no effect* on costs to the parties

6. If the case did not settle, why not?

_____
_____
_____

7. Please check the actions you undertook in the mediation:
   [ ] Focused on legally relevant issues
   [ ] Focused on the evidence of the case
   [ ] Gave an advisory opinion of the likely outcome
   [ ] Provided parties with particular settlement proposal or range
   [ ] Gave primacy to parties' needs & interests
   [ ] Focused on parties' perception of case
   [ ] Helped parties determine strengths & weaknesses of case
   [ ] Helped parties generate own options

8. Comments on the program:

Appendix 2.4(c)
Mediation Evaluation Form for Parties, Northern District of Illinois

U.S. DISTRICT COURT
NORTHERN DISTRICT OF ILLINOIS (WESTERN DIVISION)
MEDIATION EVALUATION FORM
-- For Parties --

Please promptly fill out this form after the mediation conference and return it to the ADR Administrator via fax at 815-987-4291. No case identification will be associated with these responses for purposes other than program evaluation.

Name of Mediator: _____

Case Number: _____

Date of Mediation: _____ Type of Case: _____

Outcome: [ ] settled [ ] partially settled [ ] not settled [ ] continued for further mediation

Number of mediation sessions held: _____ Number of hours spent in mediation: _____

Are you the [ ] defendant [ ] plaintiff

Number of cases in which you have participated in mediation prior to this one: _____

1. On a scale of 1 – 5 (1 = strongly disagree, 2 = disagree, 3 = neither agree nor disagree, 4 = agree, 5 = strongly agree), please respond to the following:

	SD	D	N	A	SA
a) The mediator was well-prepared for the mediation	1	2	3	4	5
b) I understood the mediation process:	1	2	3	4	5
c) The mediator allowed me to fully present my case:	1	2	3	4	5
d) The mediator carefully listened to my side of the case:	1	2	3	4	5
e) The mediator helped me to generate options for settling the dispute:	1	2	3	4	5
f) The mediation asked appropriate questions to determine the facts of the case:	1	2	3	4	5
g) Overall, I am satisfied with the mediation process:	1	2	3	4	5
h) The process was fair to all parties:	1	2	3	4	5
i) Overall, I am satisfied with what was accomplished in the mediation:	1	2	3	4	5
j) Overall, I am satisfied with the agreement (if reached):	1	2	3	4	5

2. Overall, how helpful or detrimental was the mediation in the resolution of this case?
   1. [ ] Very detrimental;
   2. [ ] Somewhat detrimental;
   3. [ ] It had little impact on the case;
   4. [ ] Somewhat helpful;
   5. [ ] Very helpful

4. Did the mediator appear to have a bias for the [ ] Plaintiff? [ ] Defendant? [ ] No Bias

5. Do you think the assignment of this case to mediation:
   [ ] Facilitated (or will facilitate) its early resolution
   [ ] Will increase time to resolution
   [ ] Will have no impact on time to resolution

6. Do you think the assignment of this case to mediation:
   [ ] Has reduced (or will reduce) litigation costs
   [ ] Will increase litigation costs
   [ ] Will have no effect on costs

7. If the case did not settle, why not?
_____
_____

8. Would you be willing to use mediation again?
   [ ] Yes [ ] No

   Why or why not? _____
   _____

9. Would you be willing to use *this* mediator again?
   [ ] Yes [ ] No

   Why or why not? _____
   _____

10. Comments on the mediator or the mediation process:

Chapter 3
Preliminary Injunction

3.1 Introduction
3.1.1 The Special Circumstances of the Preliminary Injunction (PI) Application in Patent Cases
3.1.2 Opportunities Presented by PI Applications in Patent Cases
3.1.3 Frequency of PI Applications in Patent Cases
3.1.4 Governing Legal Standards: § 283, Federal Circuit Law, and Fed. R. Civ. P. 65
3.1.5 Tension Between Right to Exclude and Equitable Considerations
3.1.6 Meaning of Status Quo
3.2 Standards and Burdens
3.2.1 Discretion of Trial Court
3.2.2 Factors To Be Considered
3.2.2.1 Reasonable Likelihood of Success on the Merits
3.2.2.1.1 Claim Construction and Infringement
3.2.2.1.2 Invalidity
3.2.2.2 Irreparable Harm if the PI Is Not Granted
3.2.2.2.1 Presumption
3.2.2.2.2 Evidentiary Factors
3.2.2.2.3 Non-Practicing Entities
3.2.2.3 Balance of Hardships
3.2.2.4 Impact on the Public Interest
3.2.2.5 Burdens of Proof and Persuasion
3.2.2.6 Effect of Proceedings in the Patent and Trademark Office
3.3 Temporary/Ex Parte Orders
3.3.1 Generally
3.3.2 Procedure
3.4 Discovery
3.5 Hearing
3.5.1 Whether to Conduct a Hearing
3.5.2 Notice and Scheduling
3.5.3 Evidentiary Showing—What to Expect
3.6 Rule 65 Trial
3.7 Bond
3.8 Order
3.8.1 Specificity
3.8.2 Parties Affected
3.8.3 Modification
3.9 Appellate Review
3.9.1 Writ Review
3.9.2 Stays
3.10 Enforcement
Appendix 3-1 Template for Order Granting a Preliminary Injunction

3.1 Introduction

3.1.1 The Special Circumstances of the Preliminary Injunction (PI) Application in Patent Cases

The essence of the patent right—the right to exclude others from practicing the patented technology—is particularly suited to protection through injunctive relief. In certain cases, the right may only be enforced through an injunction, and in fact may be irretrievably lost, absent a preliminary injunction preventing an

accused infringer's ongoing practice of an invention during the course of litigation. However, PI applications in patent matters present special challenges. As in other cases, a party seeking a PI in a patent case must demonstrate likelihood of success on the merits and ongoing irreparable harm. Unlike in other types of cases, this showing in a patent case typically calls for analysis of nearly every substantive issue that ultimately will be presented at trial. To address the merits, patent claim terms must be at least preliminarily construed, and invalidity, infringement, and enforceability must be addressed based on those constructions. To address harm, the parties will often present complicated market analyses. These issues typically require both fact and expert discovery, all undertaken in the context of the compressed preliminary injunction schedule. PI applications therefore place a tremendous strain on the court and the parties.

3.1.2 Opportunities Presented by PI Applications in Patent Cases

While there is no question that a PI application places a weighty burden on a court's limited resources, it also presents a variety of opportunities for prioritizing case management. These opportunities will likely be greatly enhanced by aggressive use of expedited discovery strategies. *See* § 3.4. Having effectively managed the parties' expedited discovery demands, the court may be well positioned to promote early settlement, early summary judgment, and possibly a consolidated trial under Rule 65(a)(2).

Settlement: Having identified key claim terms and developed their best arguments for infringement and invalidity, the parties will exit the PI process with a more finely tuned understanding of the relative strengths of their cases. The court will be familiar with the technology and will have heard at least some of the fundamental arguments and counter-arguments in the case. This is a propitious time to consider settlement. *See* § 2.6 (concerning settlement generally). Courts may ask the parties to engage in settlement talks and/or mediation either immediately before or immediately after the PI motion is decided.

Early summary judgment or Fed. R. Civ. P. 65(a)(2) trial: The PI process may reveal one or more case-dispositive issues. For example, the plaintiff may present a clear-cut case of infringement or the defendant may raise a particularly strong invalidity argument. Courts should take note if a party emphatically states "Your Honor, this is a simple case . . . ." Although patent cases are not usually simple from the court's perspective, a court may choose to take a party at its word and hold its feet to the fire: the court can use the PI process to expedite discovery on the issue and order an early summary judgment motion or expedited trial on the merits under Fed. R. Civ. P. 65(a)(2). *See generally* § 3.6.

3.1.3 Frequency of PI Applications in Patent Cases

The frequency with which patentees have sought preliminary injunctions has ebbed and flowed over the years with changes in legal standards and economic conditions. Before the creation of the Federal Circuit in 1982, PIs were rarely granted because courts typically required a prior judicial determination of patent validity, and considered damages after trial adequate to compensate for infringement. This made the irreparable harm prong particularly difficult to establish.

Shortly after its establishment, the Federal Circuit ushered in a new era, emphasizing that "the very nature of the patent right is the right to exclude others. . . . A court should not be reluctant to use its equity powers once a party has so clearly established his patent rights." *Smith Int'l v. Hughes Tool Co.*, 718 F.2d 1573, 1581 (Fed. Cir. 1983). The court ruled that "where validity and continuing infringement have been clearly established . . . immediate irreparable harm is presumed." *Id.* (footnote omitted). Over time, however, the Federal Circuit raised the bar for plaintiffs, giving greater weight to the classical view of a preliminary injunction as "a drastic and extraordinary remedy that is not to be routinely granted." *Intel Corp. v. ULSI Sys. Tech., Inc.*, 995 F.2d 1566, 1568 (Fed. Cir. 1993); *see also Amazon.com, Inc. v. Barnesandnoble.com, Inc.*, 239 F.3d 1343, 1366 (Fed. Cir. 2001) (overturning grant of PI where the defendant has "raised substantial questions" as to the patent's validity). In 2006, the Supreme Court reinforced this more searching and cautious perspective, holding that courts in patent cases must weigh all of the factors in any injunction analysis—likelihood of success on the merits, irreparable harm, balance of hardships and public interest. *eBay, Inc. v. MercExchange, L.L.C.*, 547 U.S. 388, 391-92 (2006).

Nevertheless, PIs remain an important option in some patent cases, particularly those involving dynamic, fast-paced, highly competitive markets where plaintiffs believe they will lose the benefit of their patent rights absent a PI. Furthermore, the Federal Circuit's en banc *Seagate* opinion may encourage PI applications where the alleged infringement begins on or about the date that the infringement suit was filed.[1] In *Seagate*, the Federal Circuit explained that "[a] patentee who does not attempt to stop an accused infringer's activities [by seeking a PI] should not be allowed to accrue enhanced damages based solely on the infringer's post-filing conduct." *In re Seagate Tech., LLC,* 497 F.3d 1360, 1374 (Fed. Cir. 2007). Thus, *Seagate* suggests that a plaintiff seeking only prospective damages might be required to seek a PI in order to have a reasonable chance of recovering enhanced damages for willful infringement. This application of *Seagate,* however, presents risk which could discourage PI applications. The Federal Circuit in *Seagate* went on to explain that "if a patentee attempts to secure injunctive re-

1. Patent litigation is often filed shortly after a patent issues or a new product is introduced. In such cases, damages typically are based solely on post-filing conduct.

lief but fails, it is likely the infringement did not rise to the level of recklessness [that is necessary for a willfulness finding]." *Id.* The court reasoned that "[a] substantial question about invalidity or infringement is likely sufficient not only to avoid a preliminary injunction, but also a charge of willfulness based on post-filing conduct." *Id.* Thus a party that seeks but fails to win a PI may have done significant harm to its case on enhanced post-filing damages. There is one notable exception: "in some cases a patentee may be denied a preliminary injunction despite establishing a likelihood of success on the merits, such as when the remaining factors are considered and balanced. In that event, whether a willfulness claim based on conduct occurring solely after litigation began is sustainable will depend on the facts of each case." *Seagate*, 497 F.3d at 1374.

3.1.4 Governing Legal Standards: § 283, Federal Circuit Law, and Fed. R. Civ. P. 65

District courts have discretion to grant injunctions to prevent the violation of patent rights. Section 283 of the Patent Act provides that courts "may grant injunctions in accordance with the principles of equity to prevent the violation of any right secured by patent, on such terms as the court deems reasonable." An injunction application is evaluated according to the traditional four-factor test: the court weighs the applicant's likelihood of success on the merits, irreparable harm to the applicant, the balance of harm between the parties, and the public interest. *See eBay, Inc. v. MercExchange, L.L.C.*, 547 U.S. 388, 391-92 (2006).

Fed. R. Civ. P. 65 sets forth the procedures governing PI motions, Federal Circuit law governs the analysis. The Federal Circuit has explained that while "the grant of a preliminary injunction [is] a matter of procedural law not unique to the exclusive jurisdiction of the Federal Circuit, and on appellate review . . . procedural law of the regional circuit in which the case was brought [applies]," Federal Circuit law governs the decision as to whether to grant a PI. *Mikohn Gaming Corp. v. Acres Gaming, Inc.*, 165 F.3d 891, 894 (Fed. Cir. 1998). "Because the issuance of an injunction . . . enjoins 'the violation of any right secured by a patent, on such terms as the court deems reasonable,' a preliminary injunction . . . , although a procedural matter, involves substantive matters unique to patent law and, therefore, is governed by the law of [the Federal Circuit].'" *Id.* (quoting *Hybritech Inc. v. Abbott Labs.*, 849 F.2d 1446, 1451 n.12 (Fed. Cir. 1988)); *see also Texas Instruments, Inc. v. Tessera, Inc.*, 231 F.3d 1325, 1328 (Fed. Cir. 2000) ("This court, however, applies its own body of precedent to uniformly deal with procedural matters arising from substantive issues in areas of law within the unique jurisdiction of this circuit.").

While the district court grants or denies the injunction at its discretion, the grant or denial must be supported by findings of fact that explicitly address the equitable factors weighed in the decision process. *See* Fed. R. Civ. P. 52(a); *Pretty*

Punch Shoppettes, Inc. v. Hauk, 844 F.2d 782, 784 (Fed. Cir. 1988). The trial court must provide sufficient factual findings to enable meaningful review of the merits of its order. *Nutrition 21 v. United States*, 930 F.2d 867, 869 (Fed. Cir. 1991) ("Sufficient factual findings on the material issues are necessary to allow [the Federal Circuit] to have a basis for meaningful review. Otherwise, [the Federal Circuit] has no basis for evaluating what facts entered into the district court's analysis or whether the district court's reasoning comports with the applicable legal standard.") (Citations omitted); *Oakley, Inc. v. Int'l Tropic-Cal, Inc.*, 923 F.2d 167, 168 (Fed. Cir. 1991) (vacating preliminary injunction where "the court's findings . . . [were] so limited and conclusory that meaningful appellate review [was] not possible").

"[A] district court must consider all four factors before *granting* a preliminary injunction to determine whether the moving party has carried its burden of establishing each of the four." *Reebok Int'l Ltd. v. J. Baker, Inc.*, 32 F.3d 1552, 1556 (Fed. Cir. 1994) (emphasis in original). This requirement does not, however, extend to the denial of a preliminary injunction, which may be based on a party's failure to make a showing on any one of the four factors, particularly, the first two. *Guttman, Inc. v. Kopykake Enters.*, 302 F.3d 1352, 1356 (Fed. Cir. 2002) ("While *granting* a preliminary injunction requires analysis of all four factors, a trial court may, as the court did here, *deny* a motion based on a patentee's failure to show any one of the four factors—especially either of the first two--without analyzing the others." (emphasis added) (citation omitted)); *see also Glaxo Group Ltd. v. Ranbaxy Pharms., Inc.*, 262 F.3d 1333, 1339 (Fed. Cir. 2001) ("Because this court's interpretation of the claims makes it unlikely that Glaxo will succeed in its infringement showing, this court need not address the other factors for a preliminary injunction."); *Reebok International*, 32 F.3d at 1556 (citing *T.J. Smith & Nephew Ltd. v. Consol. Med. Equip., Inc.*, 821 F.2d 646 (Fed. Cir. 1987) (affirming denial of preliminary injunction based on movant's failure to establish a reasonable likelihood of success and irreparable harm, even though district court did not address the other two factors)). It is nonetheless generally prudent for district courts to address all four factors in their written opinion—even if the order merely explains that the factor did not weigh significantly in either party's favor. *Polymer Techs. v. Bridwell*, 103 F.3d 970, 973, 977 (Fed. Cir. 1996) (explaining that "before denying a motion for preliminary injunction, an analysis of each of the four factors is generally appropriate 'for reasons of judicial economy and greatly aids appellate review,'" vacating denial based only on erroneous analysis of rebutted presumption of irreparable harm, and directing that "on remand, the district court should evaluate the other factors and exercise its discretion in light of its findings." (quoting *Reebok*, 32 F.3d at 1557)).

3.1.5 Tension Between Right to Exclude and Equitable Considerations

Due to the evolution of the legal standards governing PI determinations as well as philosophical differences among Federal Circuit jurists, litigants will be able to cite apparently conflicting authority regarding the proper standard. As traced above, *see* § 3.1.3, the Federal Circuit initially emphasized the role of equity to protect the right to exclude, erecting a rebuttable presumption of irreparable harm once validity and continuing infringement were established. *Smith Int'l v. Hughes Tool Co.*, 718 F.2d 1573 (Fed. Cir.). Over time, however, the Federal Circuit has shifted away from that standard, although it still echoes in some more recent decisions. See, e.g., *Abbott Labs. v. Andrx Pharms., Inc.*, 452 F.3d 1331, 1353 (Fed. Cir. 2006) (Newman, J., dissenting) (noting that denial of a patentee's PI "authorize[s] infringement before the merits are decided," depriving a patent of exclusivity during litigation). Nonetheless, the Supreme Court's decision in *eBay, Inc. v. MercExchange, L.L.C.*, 547 U.S. 388, 391-92 (2006) firmly establishes the need for courts to balance all of the equitable considerations carefully.

3.1.6 Meaning of Status Quo

As in other cases, "[t]he purpose of a preliminary injunction is to preserve the relative positions of the parties until a trial on the merits can be held." *Univ. of Tex. v. Camenisch*, 451 U.S. 390, 395 (1981). A preliminary injunction preserves the status quo if it prevents future infringement but does not undertake to assess the pecuniary or other consequences of past infringement. *Atlas Powder Co. v. Ireco Chems.*, 773 F.2d 1230, 1232 (Fed. Cir. 1985). Thus, an accused infringer cannot avoid a preliminary injunction merely by arguing that because it is presently practicing the disputed technology, preserving the status quo requires that it be allowed to continue the practice. *Id.* The accused infringer's dependence on allegedly infringing activity is considered in assessing the balance of harms. *Id.*; *Circle R v. Smithco Mfg.*, 919 F. Supp. 1272, 1303 (N.D. Iowa 1996) ("What Smithco would suffer would not be simply a partial or temporary shutdown of its business, . . . but the complete shutdown of its business, which depends entirely on the accused product the record so far shows is not in fact infringing . . . . The court is unwilling to inflict such a complete shutdown on Smithco in light of Circle R's limited showing on likelihood of success on the merits and irreparable harm."). However, "the status quo catchword does not necessarily allow [an accused infringer] to continue such dependence, apart from other factors . . . . '[S]tatus quo' is not a talisman to dispose of the question by itself." *Atlas Powder*, 773 F.2d at 1232; *see also Windsurfing Int'l, Inc. v. AMF, Inc.*, 782 F.2d 995, 1003 n.12 (Fed. Cir. 1986) (considering a *permanent* injunction and explaining that "[o]ne who elects to build a business on a product found to infringe cannot be heard to com-

plain if an injunction against continuing infringement destroys the business so elected."); *but see Archive Corp. v. Cipher Data Prods., Inc.*, 1988 U.S. Dist. LEXIS 17190, *18 (C.D. Cal. Dec. 22, 1988)("Because [the defendant] has been manufacturing [and selling] the accused [products] long prior to the issuance of [the asserted] patent, [a preliminary] injunction could not preserve the status quo and would conversely create new market conditions.").[2]

3.2 Standards and Burdens

3.2.1 Discretion of Trial Court

Abuse of discretion in granting or denying a preliminary injunction requires a "showing that the court made a clear error of judgment in weighing relevant factors or exercised its discretion based upon an error of law or clearly erroneous factual findings." *Abbott Labs. v. Andrx Pharms., Inc.*, 452 F.3d 1331, 1335 (Fed. Cir. 2006) (quoting *Polymer Techs., Inc. v. Bridwell*, 103 F.3d 970, 973 (Fed. Cir. 1996)).

Findings of fact are reviewed for clear error. However, "[t]o the extent that a district court's decision to grant a preliminary injunction hinges on questions of law, [appellate] review is de novo." *Mylan Pharms., Inc. v. Thompson*, 268 F.3d 1323, 1329 (Fed. Cir. 2001)

3.2.2 Factors To Be Considered

The traditional equitable considerations apply to analysis of injunctions in patent cases. *eBay, Inc. v. MercExchange, L.L.C.*, 547 U.S. 388 (2006). Courts must apply Federal Circuit law in assessing these considerations in a patent case. *Mikohn Gaming Corp. v. Acres Gaming, Inc.*, 165 F.3d 891, 894 (Fed. Cir. 1998).

"The magnitude of the threatened injury to the patent owner is weighed, *in light of* the strength of the showing of likelihood of success on the merits, against the injury to the accused infringer if the preliminary decision is in error." *H.H. Robertson Co. v. U.S. Deck, Inc.*, 820 F.2d 384, 390 (Fed. Cir. 1987) (emphasis added), *overruled by Markman v. Westview Instruments, Inc.*, 52 F.3d 967 (Fed.

---

2. Of course the facts of a given case may temper a court's response to a defendant's decision to build a business on an infringing product. Shutting down a defendant's business through a preliminary injunction likely would require an unusually strong showing on the merits, the absence of which could dictate that a defendant should have the opportunity of a trial before seeing its business destroyed. *See Ill. Tool Works, Inc. v. Grip-Pak, Inc.*, 906 F.2d 679, 683-684 (Fed. Cir. 1990) (observing that the result in *Windsurfing* did not support preliminary injunction where defendant would be shut down without having its day in court).

Cir. 1995). The factors—likelihood of success on the merits, irreparable harm, balance of hardship, and public interest—"taken individually, are not dispositive; rather, the district court must weigh and measure each factor against the other factors and against the form and magnitude of the relief requested." *Hybritech, Inc. v. Abbott Labs.*, 849 F.2d 1446, 1451 (Fed. Cir. 1988); *see also Eaton Corp. v. United States*, 29 C.I.T. 1149, 1162-1163 (Ct. Int'l Trade 2005) ("This court and others have held that the severity of the injury the moving party will sustain without injunctive relief is in inverse proportion to the showing of likelihood of success on the merits."). However, the factors do not all carry equal weight; the first two factors effectively set up a threshold showing that the patent holder must meet before the other factors are weighed. *See Amazon.com, Inc. v. Barnesandnoble.com, Inc.*, 239 F.3d 1343, 1350 (Fed. Cir. 2001) ("[A] movant cannot be granted a preliminary injunction unless it establishes *both* of the first two factors, *i.e.*, likelihood of success on the merits and irreparable harm."); *Polymer Techs., Inc. v. Bridwell*, 103 F.3d 970, 973-74 (Fed. Cir. 1996) ("[A] trial court need not make findings concerning the third or fourth factors if the moving party fails to establish either of the first two factors."). Furthermore, the strength of the patent holder's showing on the first two factors influences the balance of hardships and public interest analyses: a weak showing on the merits correspondingly weakens the showing on balance of hardships and public interest. *See, e.g.*, *Ill. Tool Works, Inc. v. Grip-Pak, Inc.*, 906 F.2d 679, 683-84 (Fed. Cir. 1990); *Quickie Mfg. Corp. v. Libman Co.*, 180 F. Supp. 2d 636, 651-52 (D.N.J. 2002).

3.2.2.1 Reasonable Likelihood of Success on the Merits

In order to satisfy the first equitable factor, the moving party must demonstrate that, "in light of the presumptions and burdens that will inhere at trial on the merits, [the movant] will likely prove that [the accused infringer's] product infringes the [asserted] patent and that it will withstand [the accused infringer's] challenges to the validity and enforceability of the . . . patent." *Sanofi-Synthelabo v. Apotex, Inc.*, 470 F.3d 1368, 1374 (Fed. Cir. 2006) (internal citations omitted); *see also Amazon.com, Inc. v. Barnesandnoble.com, Inc.*, 239 F.3d 1343, 1350 (Fed. Cir. 2001).

3.2.2.1.1 Claim Construction and Infringement

Likelihood of success in proving infringement and defending validity "depends fundamentally on the meaning of the asserted claim and its relationship to the accused product or process. Therefore, a correct claim construction is almost always a prerequisite for imposition of a preliminary injunction." *Chamberlain Group, Inc. v. Lear Corp.*, 516 F.3d 1331, 1339-1340 (Fed. Cir. 2008). However, claim constructions determined during the preliminary injunction stage are always

subject to later revision, and do not stand as law of the case for purposes of subsequent proceedings. See § 5.3.2.4.1; *Jack Guttman, Inc. v. Kopykake Enters., Inc.*, 302 F.3d 1352, 1361 (Fed. Cir. 2002) (explaining that "district courts may engage in a rolling claim construction" when beginning at the preliminary injunction stage); *Purdue Pharma L.P. v. Boehringer Ingelheim GmbH*, 237 F.3d 1359, 1363 (Fed. Cir. 2001) ("[F]indings of fact and conclusions of law at the preliminary injunction stage are subject to change.").

3.2.2.1.2 Invalidity

Notwithstanding the presumption of validity that attaches to all granted patents, the patentee seeking a preliminary injunction is expected to make a "clear case" for the validity of each asserted patent claim. *Amazon.com, Inc. v. Barnesandnoble.com, Inc.*, 239 F.3d 1343, 1359 (Fed. Cir. 2001). Evidence that could support such a showing includes the patent's having previously withstood a validity challenge, or industry acquiescence to the patent's validity by licensing. *Id.* Similarly, where a defendant asserts that a patent is unenforceable (e.g., due to inequitable conduct), the patentee must show that the defense "lacks substantial merit." *Purdue Pharma L.P. v. Boehringer Ingelheim GmbH*, 237 F.3d 1359, 1366 (Fed. Cir. 2001).

As a practical matter, the burden of persuasion is on the opposing party, who "must show a substantial question of invalidity to avoid a showing of likelihood of success." *Erico Int'l Corp. v. Vutec Corp.*, 516 F.3d 1350, 1354 (Fed. Cir. 2008). Note, however, that "an accused infringer may avoid a preliminary injunction by showing only a *substantial question* as to invalidity, as opposed to the higher clear and convincing standard required to prevail on the merits." *In re Seagate Tech., LLC*, 497 F.3d 1360, 1374 (Fed. Cir. 2007) (emphasis added) (citing *Amazon.com*, 239 F.3d at 1359). Stated another way,"[v]ulnerability is the issue at the preliminary injunction stage, while validity is the issue at trial. The showing of a substantial question as to invalidity thus requires less proof than the clear and convincing showing necessary to establish invalidity itself." *Amazon.com*, 239 F.3d at 1359.

3.2.2.2 Irreparable Harm if the PI Is Not Granted

3.2.2.2.1 Presumption

The Federal Circuit long ago recognized a rebuttable presumption of irreparable harm where a patent holder makes a showing of likely success on the merits. *Smith Int'l v. Hughes Tool Co.*, 718 F.2d 1573 (Fed. Cir. 1983). Where the patent holder has not shown a likelihood of success, however, no such presumption arises. *See Abbott Labs. v. Andrx Pharms., Inc.*, 452 F.3d 1331, 1347 (Fed. Cir. 2006)

(patent holder had not established a likelihood of success on the merits and so was "no longer entitled to a presumption of irreparable harm").

Indeed, in light of the Supreme Court's decision in *eBay*, it is possible that the presumption may no longer exist. *See, e.g., z4 Techs., Inc. v. Microsoft Corp.*, 434 F. Supp. 2d 437, 439 (E.D. Tex. 2006) ("[A]pplying a presumption of irreparable harm in the context of an injunction 'is contrary to traditional equitable principles.'") (quoting *Amoco Prod. Co. v. Village of Gambell, Alaska*, 480 U.S. 531, 545 (1987)). The Federal Circuit has thus far not confronted the question directly. *Cf. Sanofi-Synthelabo v. Apotex, Inc.*, 470 F.3d 1368, 1383 (Fed. Cir. 2006) (sidestepping the non-movant's argument that the district court erred in applying a presumption of irreparable harm by concluding the court properly found types of irreparable harm, including price erosion). At least one Federal Circuit opinion implicitly affirms that the presumption still applies if a movant shows likelihood of success on the merits. *See Abbott Labs. v. Andrx Pharms., Inc.*, 452 F.3d 1331, 1347 (Fed. Cir. 2006) ("Abbott has not established a likelihood of success. As a result, Abbott is *no longer* entitled to a presumption of irreparable harm." (emphasis added)). Note, however, that *Sanofi* (December 2006), in which the question is side-stepped, post-dates *Abbott Labs.* (June 2006). District courts have reached conflicting conclusions on the issue, although it appears that most courts now decline to apply the presumption. *See Voile Mfg. Corp. v. Dandurand*, 551 F. Supp. 2d 1301 (D. Utah 2008) (compiling conflicting district court opinions and noting that most conclude that the presumption did not survive *eBay*); *Tiber Labs., LLC v. Hawthorn Pharms., Inc.*, 527 F. Supp. 2d 1373, 1380 (N.D. Ga. 2007) (compiling authorities and reaching similar conclusion).

Where it is applied, the presumption may be rebutted by a showing that money damages would adequately compensate for the harm of not granting the PI. Therefore, lost sales alone cannot be the basis of an irreparable harm finding. *See Abbott Labs. v. Andrx Pharms.*, Inc., 452 F.3d 1331, 1348 (Fed. Cir. 2006) (citing *Ill. Tool Works, Inc. v. Grip-Pak, Inc.*, 906 F.2d 679 (Fed. Cir. 1990) (explaining that accepting such an argument would require a finding of irreparable harm to every manufacturer/patentee, regardless of circumstances)).

3.2.2.2.2 Evidentiary Factors

Examples of harm from patent infringement that may not be compensable by money damages include: potential price erosion; loss of market share and the resulting difficulty in determining money damages; loss of good will; work force reductions; and disruption of ongoing research and development. *Sanofi-Synthelabo v. Apotex, Inc.*, 470 F.3d 1368, 1383 (Fed. Cir. 2006); *Canon, Inc. v. GCC Int'l, Ltd.*, 263 F. App'x 57, 62 (Fed. Cir. 2008) (unpublished opinion). Other evidentiary factors that can influence the analysis of irreparable harm include:

> whether the patentee's reputation will be injured by the public mistaking inferior, infringing goods, for the patentee's product; whether the patentee or its licensees will be injured by competition from the alleged infringer; whether the patentee runs the risk of loss of sales or goodwill in the market; whether the alleged infringer's activities have or will preclude the patentee from licensing its patent or entering the market; as well as whether the patentee needs an injunction to protect its right to refuse to exploit its invention commercially or to prevent others from doing so; and whether the patentee is willing to forego patent exclusivity by licensing its invention, which suggests that any injury suffered by the patentee would be compensable in damages assessed as part of the final judgment in the case.

Circle R v. Smithco Mfg., 919 F. Supp. 1272, 1302 (N.D. Iowa 1996) (citations omitted), and

> the maturity of the field covered by the patent, the competition in the field, the patentee's presence in the field, changes in the technology in the field, research being conducted in the field, whether the patent would assist the holder to establish market position, the value of the patent over time, predictability of injury if the patent is not enforced, whether failure to enjoin will encourage other infringers, whether the patentee has engaged in a pattern of granting licenses such that it may be reasonable to expect that the patent right can be compensated by a royalty, the availability of money damages and whether the patentee delayed in bringing suit thereby discrediting irreparability.

P.N.A. Constr. Techs. v. McTech Group, Inc., 414 F. Supp. 2d 1228, 1242 (N.D. Ga. 2006). The analysis is heavily dependent on the facts of a given case. *Compare Reebok Int'l Ltd. v. J. Baker, Inc.*, 32 F.3d 1552, 1558 (Fed. Cir. 1994) ("[H]arm to reputation resulting from confusion between an inferior accused product and a patentee's superior product is a type of harm that is often not fully compensable by money.") and *Circle R*, 919 F. Supp. at 1302 (considering factors listed above) *with Altana Pharma AG v. Teva Pharms. USA, Inc.*, 532 F. Supp. 2d 666, 683 (D.N.J. 2007) (citing *Novartis v. Teva*, Nos. 04-4473, 06-1130, 2007 U.S. Dist. LEXIS 42163, at **26-28 (D.N.J. June 11, 2007) (finding that plaintiff failed to establish irreparable harm because the damages were calculable, Teva had the ability to pay any monetary damages judgment, and the possibility of a loss of market share, irreversible price erosion, and lost research opportunities do not constitute irreparable harm).

The facts may indicate that, while a preliminary injunction is warranted, it should be narrowly tailored to minimize irreparable harm while still allowing some commercialization by the accused infringer. *See, e.g., P.N.A. Constr.*, 414 F. Supp. 2d at 1244 ("[T]he Court believes preliminary injunctive relief tailored to the unique facts here best serves the law and the parties. Specifically, the Court is not inclined to consider granting a comprehensive injunction, especially one that

would prohibit Defendants from performing contracts into which it already has entered. The risk to Plaintiff's patent rights derives, in the Court's view, from continuing sales, and if a preliminary injunction is entered, it ought to apply only to new contracts.").

The irreparable harm presumption may also be rebutted by a showing that the patent holder delayed in bringing its infringement action. *See Pfizer, Inc. v. Teva Pharmaceuticals, USA, Inc.*, 429 F.3d 1364, 1381 (Fed. Cir. 2005); *but see High Tech. Med. Instr., Inc. v. New Image Indus., Inc.*, 49 F.3d 1551 (Fed. Cir. 1995) ("[T]he period of delay may not have been enough, standing alone, to demonstrate the absence of irreparable harm."). Likewise, if future infringement is unlikely or the patent holder has licensed the patent to others the presumption may be blunted. *See Novo Nordisk A/S v. Sanofi-Aventis U.S. LLC*, 2008 U.S. Dist. LEXIS 12342, 21-22 (D.N.J. Feb. 19, 2008) (citing *Cordis Corp.*, 99 F. App'x at 933-35 (acknowledging that delay in bringing an action, seeking monetary damages, granting licenses, and relative market effects are factors that may be considered by a court when determining whether the defendant has rebutted the presumption of irreparable harm)). In contrast, however, the presence of other infringers in the marketplace does not negate irreparable harm. *Id.* (citing *Pfizer, Inc.*, 429 F.3d at 1381).

3.2.2.2.3 Non-Practicing Entities

Where a patentee does not practice the invention or otherwise commercially exploit it, irreparable harm is more difficult to demonstrate. *See High Tech Med. Instr, Inc. v. New Image Indus., Inc.*, 49 F.3d 1551, 1556 (Fed. Cir. 1995) ("Although a patentee's failure to practice an invention does not necessarily defeat the patentee's claim of irreparable harm, the lack of commercial activity by the patentee is a significant factor in the calculus."). Whether the patentee practices the invention is clearly a factor that concerns trial courts. *See, e.g., Paice LLC v. Toyota Motor Corp.*, No. 2:04-CV-211-DF, 2006 U.S. Dist. LEXIS 61600 (E.D. Tex. Aug. 16, 2006), *aff'd in part and vacated*, 504 F.3d 1293, 1303 (Fed. Cir. 2007) (holding that "because Plaintiff does not compete for market share . . . concerns regarding loss of brand name recognition and market share similarly are not implicated"); *Visto Corp. v. Seven Networks, Inc.*, No. 2:03-CV-333-TJW, 2006 U.S. Dist. LEXIS 91453 (E.D. Tex. Dec. 19, 2006) (holding that "[the parties] are direct competitors, and this fact weighs heavily in the court's analysis").

Nevertheless, a non-practicing entity is not barred from obtaining a preliminary injunction:

> [S]ome patent holders, such as university researchers or self-made inventors, might reasonably prefer to license their patents, rather than undertake efforts to secure the financing necessary to bring their work to market themselves. Such

> patent holders may be able to satisfy the traditional four-factor test, and we see no basis for categorically denying them the opportunity to do so.

eBay, 547 U.S. at 392. Relying upon this portion of the *eBay* opinion, the district court in *Commonwealth Scientific and Indust. Research Org. (CSIRO) v. Buffalo Tech. Inc.*, 492 F. Supp. 2d 600 (E.D. Tex. 2007), granted a permanent injunction to a non-practicing entity. CSIRO is the principal scientific research organization of the Australian government, similar to the United States' National Science Foundation and National Institutes of Health. It "relies heavily on the ability to license its intellectual property to finance its research and development." *Id.* at 604. The trial court held that even though CSIRO did not commercialize its patent itself and instead sought licensing revenue, the harm suffered by CSIRO was not merely financial: Buffalo's infringement meant that CSIRO's "reputation as a research institution has been impugned just as another company's brand recognition or good will may be damaged." *Id.* at 605.

In discussions of the subject of non-practicing entities (and sometimes in briefs), the pejorative term "patent troll" is often used to conjure an image of opportunistic misuse of the patent system. The label is as analytically unhelpful as it is attention-grabbing, explaining why it is not generally found in judicial opinions. It is not necessary for a court to determine whether a patent owner is a "troll" in order to determine where the equities lie. Instead, as cases such as *Paice* and *CSIRO* show, the issue is whether the infringement causes irreparable harm to the patentee. Under some circumstances, a non-practicing patentee may suffer irreparable harm from ongoing infringement, *CSIRO*, 492 F. Supp. 2d at 607-08, but under other circumstances it may not, *Paice*, 504 F.3d at 1303.

3.2.2.3 Balance of Hardships

The grant of a preliminary injunction in a patent case often results in the defendant having to remove a product from the market, or at least drastically modify it, pending trial. Furthermore, given the extended duration of many patent cases, the defendant may face months or even years before the product can be reintroduced (assuming the defendant prevails). As a result, the hardship on the defendant can be drastic. That is why the patentee must post a bond in order to get a TRO or preliminary injunction. See § 3.7. On the other hand, a patent holder enjoys a property right that can only be exploited for a limited time. Denial of that right for the months or years of a patent case can irretrievably lead to hardship in the form of price erosion, loss of reputation, loss of market share, and lost opportunity to lead or even dominate a market the patent holder ought rightfully to lead (assuming the patent holder prevails). In *Illinois Tool Works*, the Federal Circuit considered these opposing hardships and explained

> The hardship on a preliminarily enjoined manufacturer who must withdraw its product from the market before trial can be devastating. On the other hand, the hardship on a patentee denied an injunction after showing a strong likelihood of success on validity and infringement consists in a frequently and equally serious delay in the exercise of his limited-in-time property right to exclude. Neither hardship can be controlling in all cases. Because the court must balance the hardships, at least in part in light of its estimate of what is likely to happen at trial, it must consider the movant's showing of likelihood of success. Yet, a court must remain free to deny a preliminary injunction, whatever be the showing of likelihood of success, when equity in the light of all the factors so requires.

Ill. Tool Works, Inc. v. Grip-Pak, Inc., 906 F.2d 679, 683 (Fed. Cir. 1990). Courts facing the prospect of such dire consequences to one party or the other therefore must engage in a sensitive analysis based on the unique facts of each case. The relative strength of the parties' showings on the merits influences the outcome. Where the patent holder's evidence is especially weak, the showing on balance of hardships and/or public interest must be more compelling. *Ill. Tool Works, Inc. v. Grip-Pak, Inc.*, 906 F.2d 679, 683 (Fed. Cir. 1990).

A party's considered business decision to take a calculated risk of infringement cannot, however, form the basis of a finding of harm to justify denying injunctive relief. *See Sanofi-Synthelabo v. Apotex, Inc.*, 470 F.3d 1368, 1383 (Fed. Cir. 2006) ("The court did not clearly err in finding that Apotex's harms were 'almost entirely preventable' and were the result of its own calculated risk to launch its product pre-judgment."). Thus, for example, a party that elected to launch an accused product during the course of patent litigation could not avoid a PI by complaining that the harm incurred in having to cease manufacture and sale of the product outweighed the patent holder's harm in facing irreversible price erosion. *Id.* at 1382-83.

3.2.2.4 Impact on the Public Interest

Although the public has an abstract interest in protecting rights secured by valid patents, the focus of the district court's public interest analysis should be whether the public has some critical interest in the specific case that would be injured by the grant or denial of preliminary relief. *See Hybritech, Inc. v. Abbott Labs.*, 849 F.2d 1446, 1458 (Fed. Cir. 1988). Thus, the public interest in enforcement of valid patents, taken alone, does not skew this factor toward the patent holder. *See id.* However, a specific public concern can weigh heavily in the analysis, particularly in an industry, such as pharmaceuticals, where development costs are very high and the public interest in effective new products is also high. *See Sanofi-Synthelabo v. Apotex, Inc.*, 470 F.3d 1368, 1383-84 (Fed. Cir. 2006) (finding that district court did not clearly err in concluding that the significant public

interest in encouraging investment in development and protecting the exclusionary rights conveyed in valid patents tipped the scale in favor of pharmaceutical patent holder).

In some cases, the public interest could weigh heavily enough that a court might deny an injunction even where the patent holder makes a reasonable showing on merits and irreparable harm. For example, "[i]f a patentee's failure to practice a patented invention frustrates an important public need for the invention, a court need not enjoin infringement of the patent. Accordingly, courts have in rare instances exercised their discretion to deny injunctive relief in order to protect the public interest." *Rite-Hite Corp. v. Kelley Co.*, 56 F.3d 1538, 1547 (Fed. Cir. 1995) (citations omitted). In *z4 Technologies*, the district court found that the public interest weighed against enjoining ongoing infringement. *See z4 Techs. Inc. v. Microsoft Corp.*, 434 F. Supp. 2d 437, 439 (E.D. Tex. 2006). The case involved product activation software that was used by every genuine purchaser of Microsoft's popular Windows XP and Office products. *See id.* at 439. Although the jury found willful infringement, the district court declined to order Microsoft to redesign its software or turn off its product activation servers, stating that it was "unaware of any negative effects that might befall the public in the absence of an injunction," that "it is likely that any minor disruption to the distribution of the products in question could occur and would have an effect on the public due to the public's undisputed and enormous reliance on these products" and "[a]lthough these negative effects are somewhat speculative, such potential negative effects on the public weigh, even if only slightly, against granting an injunction." *Id.* at 443-44.

3.2.2.5 Burdens of Proof and Persuasion

The patent holder has the burden of proof to demonstrate the predicates for a PI. *See Abbott Labs. v. Andrx Pharms., Inc.,* 452 F.3d 1331, 1334 (Fed. Cir. 2006). This includes the burden of showing that asserted patents are valid and enforceable, notwithstanding either the presumption of patent validity or the fact that the accused infringer has the ultimate burden of proof on these issues at trial. *See, e.g.*, *Amazon.com, Inc. v. Barnesandnoble.com, Inc.*, 239 F.3d 1343, 1350 (Fed. Cir. 2001); *Hybritech, Inc. v. Abbott Laboratories*, 849 F.2d 1446, 1451 (Fed. Cir. 1988); *Purdue Pharma L.P. v. Boehringer Ingelheim GmbH*, 237 F.3d 1359, 1366 (Fed. Cir. 2001).

The patentee may make its showing of patent validity and enforceability based on the patent's prosecution history, prior litigation involving the patent, or other evidence such as industry having "acquiesced in" the patent (e.g., competitors having paid royalties to license it). *See Amazon.com*, 239 F.3d at 1359; *Eyeticket Corp. v. Unisys Corp.*, 155 F. Supp. 2d 527, 542-43 (E.D. Va. 2001) (citing *H.H. Robertson*, 820 F.2d at 388-89).

Once the patent holder makes its showing, the accused infringer must come forward with evidence that raises a "substantial question" of invalidity. *Amazon.com*, 239 F.3d at 1358. It is important to note, however, that validity challenges may successfully defeat a PI application "on evidence that would not suffice to support a judgment of invalidity at trial." *Amazon.com*, 239 F.3d at 1358-59. At the PI stage, the defendant need not meet the "clear and convincing" burden of proof it must meet to prevail on invalidity or unenforceability at trial. *Id.* ("Vulnerability is the issue at the preliminary injunction stage, while validity is the issue at trial. The showing of a substantial question as to invalidity thus requires less proof than the clear and convincing showing necessary to establish invalidity itself.").

3.2.2.6 Effect of Proceedings in the Patent and Trademark Office

Where a patentee moves for a preliminary injunction with regard to a patent that is subject to pending interference or reexamination proceedings at the PTO, the question arises whether those proceedings constitute evidence of substantial questions as to the validity of the patent. As discussed in § 11.2.6.4, the PTO grants reexamination requests when it determines that a "substantial new question of patentability" has been raised. 35 U.S.C. § 303. As noted above, the Federal Circuit has stated that "validity challenges during preliminary injunction proceedings can be successful, that is, they may raise substantial questions of invalidity, on evidence that would not suffice to support a judgment of invalidity at trial." *Amazon.com*, 239 F.3d at 1358. This suggests that the PTO's grant of a reexamination request supports an accused infringer's invalidity argument at the preliminary injunction stage. *See Pergo, Inc. v. Faus Group, Inc.*, 401 F. Supp. 2d 515, 524 (E.D.N.C. 2005) ("[W]hile the grant of a motion for reexamination is not conclusive as to the issue of validity, it is probative to the issue of whether defendants have raised a substantial question of validity."); *DUSA Pharms., Inc. v. River's Edge Pharms.*, 2007 U.S. Dist. LEXIS 16005 at *9 (D.N.J. Mar. 6, 2007) (reaching similar conclusion). Indeed, the Federal Circuit appears to have stated as much: "A substantial question about invalidity or infringement is likely sufficient not only to avoid a preliminary injunction, but also a charge of willfulness based on post-filing conduct." *Seagate*, 497 F.3d at 1374.

Of course, extending the grant of a reexamination request to support denial of a PI requires the assumption that a "substantial new question of patentability" has the same meaning as a substantial question about the merits of a patent holder's case. In applying *Seagate* in the context of a willfulness analysis, one district court made this assumption: "To the extent the Court accepts the PTO's determinations that there are substantial questions of validity, the Court grants partial summary judgment of no willful infringement with respect to post-filing conduct." *Lucent*

Techs., Inc. v. Gateway, Inc., 2007 U.S. Dist. LEXIS 95934, 18-19 (S.D. Cal. Oct. 30, 2007) (reasoning that because there was a substantial question, there could have been no willful infringement).

On the other hand, in the context of a willfulness inquiry, the Federal Circuit has stated that "the grant by the examiner of a request for reexamination is not probative of unpatentability. The grant of a request for reexamination, although surely evidence that the criterion for reexamination has been met . . . does not establish a *likelihood* of patent invalidity." *Hoechst Celanese Corp. v. BP Chems. Ltd.*, 78 F.3d 1575, 1584 (Fed. Cir. 1996) (emphasis added). Accordingly, while a court should consider the arguments raised in a request for reexamination, and should probe the patent holders' counterarguments to assess their persuasiveness, the reexamination grant itself likely is not enough to warrant denial of a preliminary injunction. *Cf. DUSA Pharms., Inc. v. River's Edge Pharms.*, 2007 U.S. Dist. LEXIS 16005 at *10 (D.N.J. Mar. 6, 2007) (granting motion to dissolve preliminary injunction where patent holder "ha[d] not shown that the validity question raised by the reexamination order and the Office Action lacks substantial merit").

Where the reexamination proceeding has progressed beyond a grant, and some or all patent claims have been rejected by the PTO, such evidence should weigh heavily in the court's analysis-- although it is not dispositive of the likelihood of the patent's withstanding a validity challenge. *See Tap Pharm. Prods. v. Atrix Labs., Inc.*, 2004 U.S. Dist. LEXIS 17118 at *8 (N.D. Ill. Aug. 26, 2004) ("Since the PTO's [reexamination] proceeding has only passed its first stages, I have had difficulty determining what bearing the PTO's preliminary invalidation of the '721 patent should have in these proceedings. At the very minimum, however, the PTO's invalidation raises a substantial question about the patent's validity and is, therefore, fatal to a motion for a preliminary injunction.").

Note that infringement and validity are determined on a claim-by-claim basis. It is important that the court evaluate each claim that is asserted as the basis for preliminary relief.

3.3 Temporary/Ex Parte Orders

3.3.1 Generally

As in any other case, "[a] TRO is available under FRCP 65 to a [patent] litigant facing a threat of irreparable harm before a preliminary injunction hearing can be held." *Fairchild Semiconductor Corp. v. Third Dimension (3D) Semiconductor, Inc.*, 564 F. Supp. 2d 63, 66 (D. Me. 2008) (citing Charles A. Wright, et al., Federal Practice and Procedure § 2951 (1996 & Supp. 2008)). The Supreme Court has explained that "ex parte temporary restraining orders [TROs] are no doubt necessary in certain circumstances, but under federal law they should be restricted to serving their underlying purpose of preserving the status quo and preventing ir-

reparable harm just so long as is necessary to hold a hearing, and no longer." *Granny Goose Foods, Inc. v. Bhd. of Teamsters Local 70*, 415 U.S. 423, 439 (1974) (citation omitted). Entering a TRO enjoining practice of a given technology can have extreme consequences, including the complete shutdown of a competitor's business. And the factual and legal complexity of patent cases makes it difficult—if not impossible—for a court to make the sort of hair trigger decisions necessary to grant a TRO application. These considerations render the Supreme Court's cautionary guidance in *Granny Goose* even more forceful in a patent case.

Consequently, as a practical matter, TROs are exceedingly rare in patent cases. With the possible exception of cases of blatant copying of technology in a patent that has previously withstood legal challenge, TROs are almost never granted in the face of competition between legitimate businesses. Likewise, as it is most difficult for a non-practicing entity to prove irreparable harm in the timeframe associated with a TRO, TROs in such cases should be similarly rare.

In evaluating an ex parte TRO application a court assesses the same four factors as for a PI: likelihood of success on the merits, irreparable harm, balance of hardships, and public interest. A TRO may be granted only on a clear showing of *immediate* irreparable injury. Fed. R. Civ. P. 65(b)(1)(A); *Rhino Assoc., L.P. v. Berg Mfg. and Sales Corp.*, Civil Action No. 1:04-CV-1611, Order Granting Temporary Restraining Order (Docket No. 44) (July 1, 2005 M.D. Penn.) (granting TRO where "continuing manufacture and sale of the infringing products present a *serious and immediate risk* to plaintiff of loss of good will in its customer base and of cascading and undefinable loss of revenues due to re-sales of the infringing products" (emphasis added)). In a patent case, assessment of the merits of a TRO application will typically touch on factual and expert discovery in most, if not all, aspects of the case. The time required to address the application therefore often dictates that it be evaluated in the context of a later PI hearing. *See, e.g., Robotic Vision Sys. v. View Eng'g*, 1996 U.S. Dist. LEXIS 11917, at **2-3 (C.D. Cal. Mar. 1, 1996).

While a PI may be issued only on notice to the adverse party, a TRO may issue without such notice. Fed. R. Civ. P. 65(a)(1), 65(b)(1). Nonetheless, where an adverse party has adequate notice of an application for a TRO, such that a meaningful adversarial hearing on the issues may be held, the court may treat an application for TRO as a motion for preliminary injunction. *See CVI/Beta Ventures v. Custom Optical Frames*, 859 F. Supp. 945, 948 (D. Md. 1994) (citing C. Wright & A. Miller, Federal Practice and Procedure, § 2951, p.499 (1973)).

3.3.2 Procedure

Courts have discretion to handle the attendant hearing, scheduling, and expedited discovery associated with TRO applications in a manner that best suits the circumstances of an individual case. The court may grant or deny the ex parte ap-

plication without a hearing. Or the court may decline to rule on the TRO application until the adverse party has had an opportunity to respond. *See Chem-Tainer Indus. v. Wilkin*, 1997 U.S. Dist. LEXIS 17241 (C.D. Cal. Feb. 24, 1997) ("The Court declined to rule on the TRO application. Instead, the Court set a hearing . . . and ordered Chem-Tainer's counsel to serve the papers on Defendant that same day . . . and to inform Defendant of the hearing and that any opposition was due . . . ."). Or it may decide to combine the hearings and discovery for the TRO with a pending PI application. *Robotic Vision Sys. v. View Eng'g*, 1996 U.S. Dist. LEXIS 11917, at **2-3 (C.D. Cal. Mar. 1, 1996) *rev'd on other grounds,*112 F.3d 1163 (Fed. Cir. 1997).

In determining the proper procedure, courts balance the heavy burden on the parties—often the required expedited discovery will require double and triple tracking of depositions—against the necessity for quick resolution of the applications. As discussed further below, assessing the merits of a TRO or PI application could conceivably require discovery into nearly every aspect of the case. At a minimum, plaintiffs will likely seek documents and deposition testimony regarding the structure and function of accused products (relevant to infringement allegations) and market and financial data (relative to irreparable harm). Defendants will seek discovery relating to the plaintiff's patents, including their prosecution, and possibly the sale of plaintiff's products covered by the patents (relevant to invalidity and potential on-sale bar allegations). Defendants may also seek financial data relevant to the amount of bond necessary should a PI issue. Both parties may offer experts for both claim construction (if claim terms have particular meaning in the industry) and infringement.

Thus, from a practical standpoint, in order for a court to consider a TRO application, the parties must focus the issues in order to permit expeditious resolution of the TRO application. Even if the issues are focused, factual complexity almost always precludes meaningful TRO relief. Therefore, the TRO application usually is best treated as a PI application. Depending on information developed in initial discovery and on the actions of the parties, the court may modify the discovery, briefing, and hearing schedules. *See CVI/Beta Ventures v. Custom Optical Frames*, 859 F. Supp. 945, 946-48 (D. Md. 1994) (describing the court's evolving approach to discovery and hearing related to a TRO application, in which the court ultimately treated the request as a PI application because the defendant was determined to have notice and opportunity to respond). At all times, the objective under Fed. R. Civ. P. 65(b) should be to preserve the status quo, protect the rights of the patent holder, and "ensure that parties subject to [TROs] are given an opportunity to present their case as soon as possible." *Id.* (granting preliminary injunction, but ordering a hearing for reconsideration after further discovery was completed).

3.4 Discovery

Discovery relating to a PI application can touch on nearly every substantive issue in a patent case. Claim construction is usually required, which in turn may require expert discovery if certain terms have special meaning in the art. The plaintiffs may require fact and expert testimony as to the defendant's products, including their development, structure, and operation. The plaintiff's irreparable harm allegations may require fact and expert discovery as to market conditions and the defendant's financial condition. The defendant's invalidity and unenforceability allegations may require discovery into the prosecution of the plaintiff's patents (especially where the defendant asserts inequitable conduct) and sales by the plaintiff of products covered by the patent as relevant to a potential on-sale bar argument. The defendants might also seek financial data relevant to the amount of bond necessary should a TRO or PI issue.

The initial challenge for a court confronting a PI application in a patent case is thus to balance the need to resolve the application based on a reasonably full record against the twin considerations that a PI proceeding needs to be resolved expeditiously and the parties need to conduct their business in the interim. Where a PI application is filed prior to the initiation of discovery, expedited discovery may be ordered upon motion or stipulation. *See Semitool, Inc. v. Tokyo Elec. Am.*, 208 F.R.D. 273, 276 (N.D. Cal. 2002) (explaining that "good cause [for expedited discovery] may be found where the need for expedited discovery, in consideration of the administration of justice, outweighs the prejudice to the responding party. It should be noted that courts have recognized that good cause is frequently found in cases involving claims of infringement;" granting motion where plaintiff sought narrowly defined "core" discovery but denying motion as to third party expedited discovery); Fed. R. Civ. P. 26(d).

The parties should be encouraged to confer and stipulate with respect to a discovery and hearing schedule to the extent feasible. In finalizing the schedule, courts consider whether the parties have already engaged in discovery in the instant litigation or in a related matter, the complexity of the technology, any delay by the plaintiff in bringing its PI application (which weighs against aggressive expediting), *see Power Integrations, Inc. v. BCD Semiconductor Corp.*, 2008 U.S. Dist. LEXIS 16021, at **3-4 (D. Del. Feb. 11, 2008), the necessity for expert discovery, and other considerations unique to the case. Depending on the facts, discovery and hearing may be set on a shortened schedule or may need to be delayed for weeks or even months. *Compare Power Integrations*, 2008 U.S. Dist. LEXIS 16021, at **3-4 (finding expedited discovery appropriate, and setting time period to PI hearing of 85 days) *with Furminator, Inc. v. Ontel Prods. Corp.*, 246 F.R.D. 579, 581 (E.D. Mo. 2007) (plaintiff filed motion on January 24; Court granted plaintiff's request for expedited discovery and set the hearing for February 14).

The general strategies for patent case management apply here, but with even greater force. Courts should use every means to encourage the parties to focus the

issues and should keep a watchful eye for signs that the parties are using litigation tactics as a business lever: attempting to gain access to a competitor's confidential business information, disrupting a competitor's business with burdensome discovery, or driving a competitor out of business by running up litigation bills—a particular concern where one or both parties is a small or new company.[3] The court should therefore consider strictly limiting, for purposes of the PI:

1. The number of patent claims and prior art references that may be asserted.
2. The number of claim terms that will be construed.
3. The number of depositions that may be taken. Consider allowing each side to take one 30(b)(6) deposition—on the accused product and on the prosecution of the patents—without precluding later 30(b)(6) depositions. *See, e.g., Eyeticket Corp. v. Unisys Corp.*, 155 F. Supp. 2d 527, 530 (E.D. Va. 2001) (allowing limited expedited discovery in which each party was permitted to depose two key witnesses prior to the PI hearing).
4. The number and nature of document requests. This is an area particularly subject to abuse.
5. The issues to be considered. To the extent appropriate, screen out financial argument. Sales and profits likely need not be discovered absent a party's convincing showing that lost sales could not be remedied in damages. If financial discovery is necessary to determine a proper bond amount, consider bifurcating this issue pending a decision on the application. Also, consider whether the PI briefing and argument need to address the doctrine of equivalents. (Where prosecution history has limited a patent's scope on a key claim term, a patent holder could face a very high bar in showing likelihood of success on the merits of a doctrine of equivalents argument.)

3.5 Hearing

3.5.1 Whether to Conduct a Hearing

As with other aspects of case management, a court has considerable discretion as to the handling of a hearing for a TRO or PI application. Under Fed. R. Civ. P. 65, a court need not have a hearing on a TRO application. Rule 65 is not explicit about whether the court must have a hearing to consider a PI. However, as a practical matter given the complexity of patent TRO and PI applications, courts generally hear argument, and this is the better practice.

---

3. Note that because much of the business information in a patent case is highly confidential, it will likely be necessary for the court to enter a protective order before PI discovery can go forward. On protective orders generally, see § 4.2.4.

A hearing offers the opportunity to move the case forward significantly. Evidence received on a PI motion that would be admissible at trial "becomes part of the trial record and need not be repeated at trial." Fed. R. Civ. P. 65(a)(2). Note, however, that to the extent a party has preserved the right to jury trial, the evidence may have to be repeated to the jury if the matter goes to trial. See Fed. R. Civ. P. 65(a)(2) Advisory Committee's Note ("[T]he jury will have to hear all the evidence bearing on its verdict, even if some part of the evidence has already been heard by the judge alone on the application for the preliminary injunction.").

As discussed further in § 3.6, the court may dispose of certain issues by advancing their trial on the merits. *See id.*

3.5.2 Notice and Scheduling

"The court may issue a preliminary injunction only on notice to the adverse party." Fed. R. Civ. P. 65(a)(1). Notice must be effective as to all parties that will be bound by the order. Fed. R. Civ. P. 65(d) ("[An order granting an injunction] is binding upon the parties to the action, their officers, agents, servants, employees, and attorneys, and upon those persons in active concert or participation with them who receive actual notice of the order by personal service or otherwise."); *see also Dentsply Int'l, Inc. v. Kerr Mfg. Co.*, 42 F. Supp. 2d 385, 394-400 (D. Del. 1999) (analyzing whether non-party was bound by injunction and concluding that nonparty was in privity with party and was therefore bound).

If expedited discovery relating to the PI application is an issue, the PI hearing may be set following a conference with the parties during which the court should explore the discovery that will be necessary to address the merits of the application see § 3.4 (discussing strategies for focusing this discovery). Discovery for PI applications is necessarily expedited and can be quite burdensome. Nevertheless, as in § 3.4, because of the breadth of fact and expert discovery that may be required for a PI application in a new patent case, it is not uncommon for this discovery to take several weeks or longer.

3.5.3 Evidentiary Showing—What to Expect

As discussed above, the analysis of a PI application can touch on nearly every aspect of a patent case. Evidence that will likely be brought to the court during the PI process includes:

- Claim construction: fact evidence as to the prosecution of the patent and any limitations imposed on claim meaning and/or available equivalents; expert testimony as to special meanings of claim terms in the industry.
- Infringement: fact and expert evidence as to structure and operation of accused products and comparison of accused products to patent claim terms.

- Validity/enforceability: fact and expert evidence as to allegedly invalidating prior art references; fact evidence as to alleged inequitable conduct or other unenforceability defenses.
- Irreparable harm: fact and expert evidence as to market conditions and growth projections, status of the parties in the industry (e.g., market leader, new entrant to market, etc.), special circumstances (e.g., approaching holiday sales or changes in the market brought on by legislation or regulatory action).
- Other: evidence relating to public interest, such as the public's need for an accused medical device or pharmaceutical; evidence relating to proper bond amount.

3.6 Rule 65 Trial

As can be seen from the above, the bulk of the substance of a patent case will be in play in deciding a PI motion. Depending on the facts of a given case, one or more issues may be ripe for final disposition, even at this early stage.

For example, defendant may argue that its product is non-infringing because it is clear that a particular claim element is not in its product and that plaintiff is using patent litigation as a tactic to disrupt or destroy defendant's business. In such a case, Rule 65 presents the court and the litigation "victim" with an opportunity in the form of an early trial on the merits, through consolidation with the PI hearing. *See* Fed. R. Civ. P. 65(a)(2). Likewise, where a prior art reference or inequitable conduct allegation appears convincingly to render a patent invalid or unenforceable, a Rule 65 trial may be warranted.

While an early trial may require frontloading of casework by both the parties and the court, the benefits can be substantial. First, while the result of a PI motion provides the parties some early notice of the relative strengths of their cases, a Rule 65 trial crystallizes the parties' positions with respect to the issues resolved—and these issues tend to be pivotal. The plaintiff who loses on infringement on its "best" claim, or the defendant who loses on its "best shot" invalidating prior art reference will have strong reasons to reassess whether pressing forward with the litigation is wise, or whether settlement and/or dismissal of the case makes better business sense. Second, the court's offer of a Rule 65 trial gives an opportunity to force the hand of litigants that are misusing the litigation process. Foot-dragging by a plaintiff that claims an infringement case is simple and straightforward may be a sign of such behavior. Finally, evidence presented during the trial becomes part of the record of the case. Nonetheless, the evidence may have to be repeated to the jury if the matter goes to trial. See Fed. R. Civ. P. 65(a)(2) Advisory Committee's Note; § 3.5.1.

A district court may order advancement of trial and consolidation with a preliminary injunction hearing on its own motion. Fed. R. Civ. P. 65(a)(2). Of

course, the decision to do so must be tempered by due process considerations. *See, e.g.*, *Pughsley v. 3750 Lake Shore Drive Coop. Bldg.*, 463 F.2d 1055, 1057 (7th Cir. 1972). Parties "should be given a clear opportunity to object, or to suggest special procedures, if a consolidation is to be ordered." *Id.*

The answers to the following questions may help the district court and the parties determine whether to proceed with the PI motion or an expedited trial on the merits:

1. What is the urgency that requires a prompt hearing?
2. Can complete relief be provided if the case proceeds to an expedited trial on the merits?
3. Will the plaintiff be able to post an injunction bond?
4. Can a standstill agreement be worked out between the parties, with or without a bond?
5. How long will it take the parties to be ready for a trial on the merits?
6. How long will it take the parties to be ready for a preliminary injunction hearing?
7. Can the parties afford the possibility of two rounds of discovery, two trials, and two appeals?
8. Will there be a jury demand?
9. Does it make sense to bifurcate liability from the damages remedy?
10. How much time will a trial on the merits take compared to a hearing on the preliminary injunction?

Morton Denlow, *The Motion For A Preliminary Injunction: Time For A Uniform Federal Standard*, 22 Rev. Litig. 495, 536 (2003).[4]

3.7 Bond

"No restraining order or preliminary injunction shall issue except upon the giving of security by the applicant, in such sum as the court deems proper, for the payment of such costs and damages as may be incurred or suffered by any party who is found to have been wrongfully enjoined or restrained." Fed. R. Civ. P. 65(c). Because the amount of the security bond is a procedural issue not unique to patent law, the amount is determined according to the law of the district court's regional circuit. *See Int'l Game Tech. v. WMS Gaming Inc.*, 1999 U.S. App. LEXIS 22971 at *4 n.1 (Fed. Cir. Sept. 3, 1999)

4. The author is a U.S. magistrate judge for the Northern District of Illinois.

The amount of a bond rests within the sound discretion of a trial court. *See Sanofi-Synthelabo v. Apotex, Inc.*, 470 F.3d 1368, 1384-85 (Fed. Cir. 2006) (citing *Doctor's Assocs., Inc. v. Distajo*, 107 F.3d 126, 136 (2d Cir. 1997)).

A court may exercise discretion in the procedure it follows for argument and decision on bond amount. Briefing and argument may be made along with briefing on the merits or may be postponed until after the decision on the injunction. *See, e.g., Eisai Co. v. Teva Pharms. USA, Inc.*, 2008 U.S. Dist. LEXIS 33747 at *38 (D.N.J. Mar. 28, 2008) ("[T]he Court will require Eisai to post security in an amount sufficient to compensate Teva should the injunction later be found to be unjustified. Therefore, the parties shall submit evidence concerning the proper amount of bond."); *Warrior Sports, Inc. v. STX, L.L.C.*, 2008 U.S. Dist. LEXIS 21387 at *1 (E.D. Mich. Mar. 19, 2008) ("[T]he Court GRANTS the Motion, but in order to determine the appropriate amount of bond, holds it in abeyance pending receipt of Defendant's estimated lost profits."). Of course, if briefing on this issue is postponed, it should be required within a reasonably short time after an injunction is ordered, because the injunction cannot take effect until the bond is posted. *See Warrior Sports*, 2008 U.S. Dist. LEXIS 21387 at *37 (ordering submittal of lost profits estimate five days after order granting injunction); *Eisai,* 2008 U.S. Dist. LEXIS 33747 at *38 (presentation of evidence on bond amount within two weeks after order granting injunction).

Discovery relating to bond amount is often intertwined with discovery relating to irreparable harm. However, the quantitative data necessary to evaluate the proper bond amount may require more in-depth discovery of financial documents than would be required for the irreparable harm analysis.

3.8 Order

3.8.1 Specificity

As discussed in the introduction to this chapter, in order to withstand appeal, a court's order must comply with Rule 65's requirements, expressly addressing the factors considered in deciding whether to grant or deny the injunction. Fed. R. Civ. P. 65(d)(1)(A). It must also specifically describe the infringing actions enjoined, with reference to particular products. *See* Fed. R. Civ. P. 65(d)(1)(C). While a denial may be based on a finding that the movant has failed to demonstrate likelihood of success on the merits or irreparable harm, *see, e.g., Novo Nordisk A/S v. Sanofi-Aventis U.S. LLC*, 2008 U.S. Dist. LEXIS 12342 (D.N.J. Feb. 19, 2008) (affirmed by *Novo Nordisk A/S v. Sanofi-Aventis U.S. LLC*, 2008 U.S. App. LEXIS 16227 (Fed. Cir. July 30, 2008)), a grant must be based on assessment of both of these factors as well as the balance of harms and public interest. The structure of an order granting a PI should systematically address each of these issues, providing the court's reasoning and conclusion. The order should also address the

technology at issue as well as the scope of the injunction and the amount of the bond. The PI Order in *Oakley, Inc. v. Sunglass Hut Int'l,* 2001 U.S. Dist. LEXIS 23572 (C.D. Cal. Dec. 7, 2001) (*affirmed Oakley, Inc. v. Sunglass Hut Int'l*, 316 F.3d 1331, 1346 (Fed. Cir. 2003)), suggesting the following general outline, is an example of such a well-drafted order.

1. Introductory material. Describe the parties, patents and technology at issue). *See id.* at **6-10.
2. Claim construction. Perform preliminary construction of key claim terms. *See id.* at **11-12. Recall that the court's construction for PI purposes can be revisited.
3. Likelihood of Success on the Merits:
   a. Infringement—analyze whether the accused devices have every element of any asserted claim under the court's construction. *See id.* at **10-14.
   b. Validity—analyze asserted invalidity contentions. *See id.* at **15-29.
   c. Enforceability—analyze asserted inequitable conduct arguments and/or other unenforceability arguments. *See id.* at **30-31.
   d. Conclusion—decide whether movant has shown it will likely prevail in showing infringement and in countering opponent's invalidity and/or unenforceability arguments. *See id.* at **31.
4. Irreparable Harm. *See id.* at **31-34. Note that the district court in *Oakley* recited a presumption of irreparable harm but also analyzed actual harm. Given that the status of the presumption is presently uncertain, this is a prudent approach.
5. Balance of Harms. *See id.* at *34.
6. Public Interest. *See id.* at **34-35.
7. Scope of Injunction. *Id.* at *3. Note that, while the court's description of the acts enjoined was somewhat cursory, the Federal Circuit affirmed, explaining that the enjoined party demonstrated its understanding of the enjoined acts by way of its actions in response to the similarly-worded TRO. *Oakley, Inc. v. Sunglass Hut Int'l*, 316 F.3d 1331, 1346 (Fed. Cir. 2003)
8. Amount of Bond. *See id.* at **35-36.

A template for drafting an order granting a PI is provided in Appendix 3-1.

Depending on the facts of the case, the court may also need to address the persons bound by the order. (*See* § 3.8.2). As can be seen from this outline, a well-drafted order granting a PI can be a complicated and lengthy document that is time consuming and challenging to prepare. This is one more reason to apply the strategies described above, *see* § 3.4, to encourage the parties to narrow and focus the issues.

3.8.2 Parties Affected

A court's PI can bind "only the following who receive actual notice . . . (A) the parties; (B) the parties' officers, agents, servants, employees, and attorney; and (C) other persons who are in active concert or participation with anyone described in [parts (A) or (B)." Fed. R. Civ. P. 65(d)(2). In applying Rule 65(d), the Federal Circuit has emphasized that "a court may not enter an injunction against a person who has not been made a party to the case before it." *Additive Controls & Measurement Sys., Inc. v. Flowdata, Inc.*, 96 F.3d 1390, 1394 (Fed. Cir. 1996).

A court is not, however, powerless against non-parties that act to frustrate a PI. "[T]hose who act in concert with an enjoined party may be held in contempt, but only for assisting the enjoined party in violating the injunction." *Id.* (citing *Spindelfabrik Suessen-Schurr v. Schubert & Salzer Maschinenfabrik Aktiengesellschaft*, 903 F.2d 1568, 1580-81 (Fed. Cir. 1990)); Fed. R. Civ. P. 65(d)(2)(C). As the Federal Circuit explained in a second *Additive Controls* case, "[n]on-parties may be held in contempt . . . if they either abet the defendant, or are legally identified with him." *Additive Controls & Measurement Sys., Inc. v. Flowdata, Inc.*, 154 F.3d 1345, 1351 (Fed. Cir. 1998) (considering whether a resigned corporate officer was "legally identified" with a corporation and listing factors that might influence the fact-specific inquiry) (quoting *Alemite Mfg. Co. v. Staff*, 42 F.2d 832, 833 (2d Cir. 1930)); *see also Power-One, Inc. v. Artesyn Techs., Inc.*, 2008 U.S. Dist. LEXIS 30338, at ** (E.D. Tex. Apr. 11, 2008) (concluding that certain non-parties could not be named in an injunction as they had not appeared before the court to have their rights adjudicated, but crafting an injunction that encompassed "successors in interest" to or persons "in active concert" with the named parties). While a party need not intend to violate an injunction to be found in contempt, non-parties may be found in contempt only if they are aware of the injunction and know that their acts, made in concert with an enjoined party, violate the injunction. *Id.* at 1353. That is, the non-party must know both that the acts are proscribed and that the person(s) with whom they are acting are subject to the injunction. *Id.* at 1353-54.

3.8.3 Modification

Modification of a PI in a patent case may be necessary to address new facts or circumstances. For example, an enjoined accused infringer may place a new product on the market through which it has attempted, but failed, to design around a patent-in-suit. In such a case, the court may modify its PI to include the manufacture and sale of the new product in the scope of enjoined actions. *See SEB S.A. v. Montgomery Ward & Co.*, 137 F. Supp. 2d 285, 287 (S.D.N.Y. 2001) ("Finding that the modified fryer infringes the '312 Patent by equivalences, this Court grants SEB further injunction relief . . . ."). Consideration of the motion for modi-

fication requires analysis of the same factors as are required for initial grant of the PI. *See id.* at 287-91 The objective in modifying the injunction should be to maintain the status quo. *See id.* ("Enjoining the sale of the modified fryer will restore the status quo.") (citing *Atlas Powder Co. v. Ireco Chems.,* 773 F.2d 1230, 1231 (Fed. Cir. 1985). Courts may also modify PI orders to encompass additional potentially infringing products that come to light during discovery, include newly issued patents, or remove expired patents.

3.9 Appellate Review

A district court's decision on a motion for preliminary injunction is usually immediately appealable, whether the decision is to grant or deny an injunction. 28 U.S.C. § 1292(a)(1).[5] As an abstract principle, the grant or denial of a preliminary injunction is a procedural issue not unique to the exclusive jurisdiction of the Federal Circuit. *Texas Instruments, Inc. v. Tessera, Inc.*, 231 F.3d 1325, 1327 (Fed. Cir. 2000). When reviewing "procedural matters not unique to the areas that are exclusively assigned to the Federal Circuit," the Federal Circuit generally applies the procedural law of the regional circuit in which the case originated. *Id.* (quoting *Nat'l Presto Indus., Inc. v. West Bend Co.*, 76 F.3d 1185, 1188 n.2 (Fed. Cir. 1996)). However, Federal Circuit precedent applies "to uniformly deal with procedural matters arising from substantive issues in areas of law within the unique jurisdiction of this circuit"—such as the grant or denial of a preliminary injunction in a patent case. *Id.*

"A decision to grant or deny a preliminary injunction pursuant to 35 U.S.C. § 283 is within the sound discretion of the district court," reviewed for abuse of discretion. *Sanofi-Synthelabo v. Apotex, Inc.*, 470 F.3d 1368, 1374 (Fed. Cir. 2006). "[A] decision granting a preliminary injunction will be overturned on appeal only if it is established 'that the court made a clear error of judgment in weighing relevant factors or exercised its discretion based upon an error of law or clearly erroneous factual findings.'" *Id.* (quoting *Genentech, Inc. v. Novo Nordisk A/S*, 108 F.3d 1361, 1364 (Fed. Cir. 1997)). However, to the extent a district court's decision is based upon an issue of law, that issue is reviewed *de novo*. *Id.* Such issues include preliminary claim constructions and obviousness determinations. *Oakley, Inc. v. Sunglass Hut Int'l*, 316 F.3d 1331, 1339 (Fed. Cir. 2003).

---

5. A decision to grant or deny a TRO is not usually appealable. Fed. R. Civ. P. 65; *Nikken USA, Inc. v. Robinson-May, Inc.,* 1999 U.S. App. LEXIS 31925 (Fed. Cir. Oct. 25, 1999) (unpublished case).

3.9.1 Writ Review

Instead of appealing, a party may seek a writ of mandamus from the Federal Circuit ordering imposition or dissolution of a preliminary injunction. "The remedy of mandamus is available only in extraordinary situations to correct a clear abuse of discretion or usurpation of judicial power. A party seeking a writ bears the burden of proving that it has no other means of attaining the relief desired, and that the right to issuance of the writ is clear and indisputable." *Razor USA LLC v. ASA Prods., Inc.*, 2000 U.S. App. LEXIS 33182, 4-5 (Fed. Cir. Nov. 22, 2000) (unpublished opinion) (citations omitted). Accordingly, a party dissatisfied with the outcome on a motion for preliminary injunction should first seek to stay the result and file a notice of appeal. *In re Lumenis, Inc.*, 89 F. App'x 255, 256 (Fed. Cir. 2004) ("The proper procedure for seeking to stay or vacate an injunction is to file a notice of appeal and a motion in the district court for a stay of the injunction, pending appeal.") (unpublished opinion).

3.9.2 Stays

A party subjected to a PI may ask the district court to stay the injunction pending appeal. *See Razor USA LLC v. ASA Prods.*, 2000 U.S. App. LEXIS 33182, 4-5 (Fed. Cir. Nov. 22, 2000) (unpublished opinion). "While an appeal is pending . . . from an order . . . that grants, dissolves or denies an injunction, the court may suspend, [or] modify" the injunction. Fed. R. Civ. P. 62(c). Whether to issue a stay of enforcement of a preliminary injunction is within the sound discretion of the district court. *Abbott Labs. v. Sandoz, Inc.*, 500 F. Supp. 2d 846, 849 (N.D. Ill. 2007) (citing Fed. R. Civ. P. 62(c)).

"To obtain a stay, pending appeal, a movant must establish a strong likelihood of success on the merits [of the appeal] or, failing that, nonetheless demonstrate a substantial case on the merits provided that the harm factors militate in its favor." *Eon-Net, L.P. v. Flagstar Bancorp, Inc.*, 222 F. App'x 970, 971-72 (Fed. Cir. 2007) (citing *Hilton v. Braunskill*, 481 U.S. 770, 778 (1987)). In deciding whether to grant a stay, pending appeal, the court weighs four factors: "(1) whether the stay applicant has made a strong showing that he is likely to succeed on the merits; (2) whether the applicant will be irreparably injured absent a stay; (3) whether issuance of the stay will substantially injure the other parties interested in the proceeding; and (4) where the public interest lies." *Standard Havens Prods., Inc. v. Gencor Indus., Inc.*, 897 F.2d 511, 512 (Fed. Cir. 1990) (quoting *Hilton v. Braunskill*, 481 U.S. 770, 776 (1987)).

As with preliminary injunction determinations, courts apply a flexible approach: "the more likely the plaintiff is to win, the less heavily need the balance of harms weigh in his favor; the less likely he is to win, the more need it weigh in his favor." *Id.* (quoting *Roland Mach. Co. v. Dresser Indus., Inc.*, 749 F.2d 380, 387-88

(7th Cir. 1984)). "Thus, the four factors can effectively be merged and a sliding scale approach is utilized, which states: 'in considering whether to grant a stay pending appeal, this court assesses movant's chances for success on appeal and weighs the equities as they affect the parties and the public.'" *Honeywell Int'l, Inc. v. Universal Avionics Sys. Corp.*, 397 F. Supp. 2d 537, 548 (D. Del. 2005) (quoting *Standard Havens*, 897 F.2d at 513); *see also E. I. du Pont de Nemours & Co. v. Phillips Petroleum Co.*, 835 F.2d 277, 278 (Fed. Cir. 1987).

For a district court that has weighed the equitable factors and issued a preliminary injunction, it may seem unlikely that a consideration of quite similar factors could lead to a decision to stay the injunction. Changed legal or factual circumstances can, of course, change the calculus. For example, in *Standard Havens*, the Federal Circuit stayed an injunction in part because, after the trial court had entered the injunction, the Patent Office rejected all the infringed patent claims in a Director-initiated reexamination. 897 F.2d at 514. Other examples could include actual or potentially imminent substantial changes in governing patent law, such as the Supreme Court or the Federal Circuit en banc deciding to take up the "next" *Festo*, *Phillips*, or *eBay* case.

3.10 Enforcement

A party subject to an injunction will often attempt to modify its product to avoid the patent, that is, to "design around" the patent. Parties may dispute whether the redesigned product still infringes. In such cases, the patent holder will often return to the court, seeking a finding that the infringer is in contempt for having violated the injunction and an order enjoining production and sale of the redesigned product. "[A] judgment of contempt against an enjoined party for violation of an injunction against patent infringement by the making, using or selling of a modified device [requires] a finding that the modified device falls within the admitted or adjudicated scope of the claims and is, therefore, an infringement." *KSM Fastening Sys., Inc. v. H.A. Jones Co.*, 776 F.2d 1522, 1530 (Fed. Cir. 1985). Accordingly,

> [b]efore entering a finding of contempt of an injunction in a patent infringement case, a district court must address two separate questions. The first is whether a contempt hearing is an appropriate forum in which to determine whether a redesigned device infringes, or whether the issue of infringement should be resolved in a separate infringement action. That decision turns on a comparison between the original infringing product and the redesigned device. If the differences are such that "substantial open issues" of infringement are raised by the new device, then contempt proceedings are inappropriate. If contempt proceedings are appropriate, the second question the district court must resolve is whether the new accused device infringes the claims of the patent. Within those

> general constraints, the district court has broad discretion to determine how best to enforce its injunctive decrees.

Additive Controls & Measurement Sys., Inc. v. Flowdata, Inc., 154 F.3d 1345, 1349 (Fed. Cir. 1998) (citing *KSM*, 776 F.2d at 1530-32) (internal citations omitted).

Because expert testimony is often required to resolve the question of whether a redesign (or "workaround") still infringes, the Federal Circuit has advised that contempt proceedings are usually inappropriate as the mechanism to address adequacy of the design-around effort. *Id.* at 1349-50 ("[O]ur case law suggests that the need for expert testimony counsels against the use of contempt proceedings to try infringement . . ."); *see also KSM*, 776 F.2d at 1530 ("[P]roceedings by way of contempt should not go forward if there is more than a "colorable difference" in the accused and adjudged devices."). However, some cases are not so close. Where a redesign is found to be a "mere colorable variation" that raises "no substantial open question of infringement," a contempt proceeding may be adequate. *Additive Controls*, 154 F.3d at 1349 (affirming district court's resolution of redesign dispute through contempt proceeding and explaining that "the district court satisfied the procedural requirements of *KSM* by separately analyzing the questions whether contempt proceedings were appropriate and whether the redesigned device infringed the patent").

Appendix 3-1
Template for Order Granting a Preliminary Injunction

A. Introduction and Background

Describe the parties, patents and technology at issue. Include relevant excerpts from the patents in suit.

B. Claim Construction

Perform preliminary construction of key claim terms. Include any intrinsic or extrinsic evidence relied upon for the preliminary construction.

C. Likelihood of Success on the Merits

1. **Infringement**
   Analyze whether the accused devices have every element of any asserted claim under the court's construction.
2. **Validity**
   Analyze asserted invalidity contentions.
3. **Enforceability**
   Analyze asserted inequitable conduct arguments and/or other unenforceability arguments.
4. **Conclusion**
   Decide whether movant has shown it will likely prevail in showing infringement and in countering opponent's invalidity and/or unenforceability arguments.

D. Irreparable Harm

Given that the status of the presumption of irreparable harm is presently uncertain, a court's order granting a PI should include analysis of this factor beyond a recitation of the presumption.

E. Balance of Harms

F. Public Interest

G. Scope of Injunction

H. Amount of Bond

Chapter 4
Discovery

4.1 Controlling Law and Standard of Review
4.2 Scope of Patent Discovery
4.2.1 Initial Disclosures
4.2.2 Requests for Production of Documents
4.2.3 Interrogatories
4.2.4 Depositions
4.2.5 Protective Orders—Handling of Confidential Documents
4.2.5.1 Over-Designation of Confidential Documents
4.2.5.2 Claw-Back Provisions For Privileged Documents
4.2.5.3 Prosecution Bars
4.2.6 Foreign Discovery Issues
4.3 Claim Construction and Discovery
4.4 Electronic Discovery
4.5 Management of Discovery Disputes
4.6 Common Discovery Motions
4.6.1 Discovery Regarding Patentee's Pre-Filing Investigation
4.6.2 Production of Information About Products
4.6.3 Contentions About Infringement, Invalidity, and Unenforceability
4.6.4 Bifurcation or Stay of Discovery Pending Re-Examination of Patent
4.6.5 Bifurcation or Stay of Discovery Pending Early Dispositive Motion
4.6.6 Bifurcation or Stay of Discovery on Issues Bifurcated for Trial
4.6.7 Privilege Waiver Based on Defendant's Election to Rely on Advice of Counsel
4.6.8 Discovery from Patent Prosecution Counsel
4.6.9 Access to Confidential Information by Patent Prosecution Counsel
4.6.10 License Agreements and Other Third-Party Confidential Information
Appendix 4.1 Protective Order, Eastern District of Texas

Discovery in patent cases can be exhaustive and exhausting for a variety of structural reasons. First, patent claims and defenses are commonly broad, justifying deep inquiry into product development and financial records. This aspect is only magnified by the emerging emphasis on electronic discovery. Not surprisingly, many technology companies make extensive use of digital technology. Second, patent litigation comes freighted with special issues such as willfulness and inequitable conduct, where concerns over privilege and work product complicate these already difficult matters. Third, the potentially consequential but unpredictable outcome—large damage awards, the possibility of an injunction—leads counsel to demand every piece of data and sometimes to avoid compromise in discovery disputes.

Discovery in patent cases should be managed carefully to promote effective dispute resolution. This chapter reviews the typical categories of information sought and explains the forces underlying discovery controversies. We examine most common points of dispute and analyze ways of resolving them. We conclude by discussing the most common discovery motions, with particular emphasis on the court's range of discretion and suggested best practices for resolving disagreements.

4.1 Controlling Law and Standard of Review

Where issues of patent law control disposition of a discovery dispute, Federal Circuit law will apply. *Midwest Indus., Inc. v. Karavan Trailers, Inc.*, 175 F.3d 1356 (Fed. Cir. 1999). But in the vast majority of discovery matters, courts should rely on the decisions of their regional circuit interpreting the Federal Rules of Civil Procedure. As in other types of federal civil litigation, discovery rulings are reviewed under an abuse of discretion standard.

4.2 Scope of Patent Discovery

Issues unique to patent cases will drive much of the discovery effort. For example, a patentee will typically seek information about development of the accused product or process, marketing and sales by the defendant, including cost and profit margins, and license fees paid by the defendant for comparable technology rights. These categories typically include highly confidential commercial and technical information, kept as trade secrets by the litigants and third parties. The sensitive nature of the information can lead to discovery disputes. Moreover, because patentees usually seek to prove that infringement was willful, they will inquire into defendants' knowledge of the patents, efforts to "design around" them, and opinions of counsel about infringement (if the defendants decide to assert advice of counsel as a defense to a willfulness charge; see §§ 4.6.7-4.6.9).

An accused infringer in turn will focus on trying to invalidate the patent, gathering information about conception and reduction to practice of the invention, and pre-filing offers for sale. Inequitable conduct claims motivate inquiry into the record of prosecution of the patent. Finally, in the search for prior art, the defense may pursue discovery from third parties, often located in other districts or countries.

Thus patent litigation discovery tends to be broad and demanding, touches highly sensitive information, and is extremely expensive. This can lead to highly contentious, unproductive friction between counsel. To assist courts in de-escalating these tensions, we begin with some general suggestions for management of the basic discovery tools in patent litigation.

4.2.1 Initial Disclosures

Rule 26 disclosures present few issues unique to patent cases. At the resulting Rule 16(b) conference, competing proposals may be made regarding the number of interrogatories and depositions. Keep in mind that patent cases in general require more extensive use of discovery tools; for example, it is the unusual patent case that results in fewer than ten depositions.

As noted in Chapter 2, some districts have enacted special local rules for patent cases that require early disclosure by the patentee of infringement contentions, and by the defendant of invalidity contentions. This approach, which can be adopted and adapted by other courts for particular cases, has the advantage of collapsing into one procedure a major aspect of the "after you; no, after you" discovery impasse that otherwise occurs in patent litigation. That is not to say that requiring exchange of contentions is a panacea; the parties frequently contest the specificity of the other side's disclosure, for example. But it focuses the parties on the core issues, in particular on preparation for claim construction.

Rule 26(a)(1)(C) requires disclosure of a computation of any category of damages claimed, the documents or other evidence supporting the computation, and materials bearing on the nature and extent of injuries suffered. However, in patent cases, a plaintiff will rarely have access to this information in advance of discovery. As discussed in § 11.4.3.2, patent damages are based on profits made by an infringer or, at a minimum, the reasonable royalty that the infringer would have paid to license the patented technology. Thus, much of the evidence as to the patentee's damages resides in the hands of the accused infringer. Accordingly, initial disclosures as to damages typically yield only a rough computation and necessarily defer disclosure of documents and other evidence to a date after discovery has been completed. Such disclosures normally should not be considered deficient.

4.2.2 Requests for Production of Documents

Reflecting the broad scope of activities that are relevant to patent cases, it is common for litigants to propound 100 or more document requests. Document requests typically reach into nearly every facet of a party's business, including product research and development, customer service and support, sales, marketing, accounting, and legal affairs. Indeed, for a smaller company that offers a single product line accused of infringing a patent, the document requests may well encompass the vast majority of records ever created in the course of the company's business. The documents must be collected in hard copy form from custodians in nearly every department and in electronic form from both the company's active computer files and all readily accessible archives.

The costs of document production include legal fees for collecting and processing the documents and reviewing them both for privilege and to provide confidentiality designations to protect the party's trade secrets and other confidential information. These fees can rapidly escalate into the millions of dollars for medium to large companies.

Document production also disrupts businesses. It may take several months for counsel working with document custodians and literally hundreds of temporary employees to identify responsive documents. Hard copy documents must then be removed from the custodians for a period of time for copying. Electronic docu-

ments in the company's active computer system may be more readily copied once they are identified, but the effort to pinpoint the relevant documents and copy them distracts the company's information technology (IT) personnel from their ordinary duties. Documents in a company's archives require substantially more time from IT personnel. Identification of responsive documents first requires retrieval of archival tapes or drives, loading the drives, possibly reading the drives using obsolete software, and often searching for responsive documents in file systems created by personnel no longer at the company. In addition, companies often have stores of electronic information that are not centrally maintained—laptop hard drives, for example—that may be difficult to locate or may have been lost before litigation began. An inventor's laptop may have been provisioned to another employee when the inventor upgraded to a new machine; yet relevant data may still exist on a currently unused portion of the laptop's hard drive, unknown to anyone. It can be very expensive in absolute terms to find and produce such data, and the ultimate value of the data to the litigation may not justify that cost. The difference in patent litigants' cost/benefit positions often spurs discovery disputes.

In short, document production can be extremely painful and costly for patent litigants. It is the unusual patent case that does not generate several motions to compel and/or motions for protective orders arising out of the document requests. Courts can facilitate more effective document collection processes by:

- reviewing the parties' electronic discovery plan at the case management conference as required by Rule 26.
- Requiring the parties to meet and confer to narrow document requests and to document their efforts in any motion to compel.
- Placing a limitation on the number of document requests permitted per side.

4.2.3 Interrogatories

The Federal Rules of Civil Procedure have a default 25-interrogatory limit per party. In their joint case management statement, parties often make a joint request for additional interrogatories. These requests should typically be granted as the scope of subject matter in patent litigation is quite broad. Because patent litigation often includes multiple plaintiffs and defendants, however, courts should consider imposing an interrogatory limit per side, rather than per party.

The case-focusing benefit of interrogatories can often be swamped by premature use of contention interrogatories that waste the parties' efforts before meaningful responses can be developed based on completion of fact and expert discovery. *See, e.g., In re Convergent Techs. Sec. Litig.*, 108 F.R.D. 328, 337 (N.D. Cal. 1985) (observing that "there is substantial reason to believe that the *early* knee jerk filing of sets of contention interrogatories that systematically track all the al-

legations in an opposing party's pleadings is a serious form of discovery abuse. Such comprehensive sets of contention interrogatories can be almost mindlessly generated, can be used to impose great burdens on opponents, and can generate a great deal of counterproductive friction between parties and counsel."). As discussed further below, answering contention interrogatories should typically be postponed until the late stages of fact discovery. The parties also should be given leave to supplement their contention interrogatory responses at a date after the completion of expert discovery. A court can prevent the all-too-common disputes as to when contention interrogatories should be answered by setting a date in the case management order after close of fact discovery for the exchange of responses to these interrogatories. Section 4.6.3 discusses motion practice relating to contention interrogatories.

4.2.4 Depositions

Fed. R. Civ. P. 30(a)(2)(A) limits to ten the number of depositions that may be taken by a party without leave of court. Again, however, as a result of the breadth of discovery, and in spite of the more extensive mandatory disclosure requirements imposed by Patent Local Rules, patent litigants often seek to take in excess of twenty depositions to develop their case, and may legitimately need more than the ten depositions allowed under Rule 30. The court should strongly encourage the parties to reach mutual agreement in their Rule 26(f) proposed discovery plan regarding the number of depositions, or cumulative hours, that will be allowed without court order. Absent agreement, a limit should be set in order to promote the parties' efficient use of the depositions. A limit of fifteen to twenty depositions per side, or about 100 hours, typically provides the parties with plenty of opportunity to cover the major issues in a case. Many judges set significantly lower presumptive limits (e.g., 40 hours per side), allowing the parties to petition for more time where justified. The most common practice is to apply these limits to fact discovery, since expert depositions tend to be self-regulating and don't involve inconvenience to the parties themselves.

The one-person/one-day limitation of Rule 30(d)(1) should presumptively apply in the absence of a showing of real need for more time (for example, if an inventor also has a role in the business). The 30(b)(6) depositions of parties in patent litigation are, however, often critical to the case. Typically, these depositions may encompass highly technical and/or detailed information spanning the course of years or even decades. It is often effective to allow 30(b)(6) depositions to continue for more than a single day. However, to prevent runaway 30(b)(6) depositions, the court can also require that each day of 30(b)(6) deposition counts as a separate deposition for purposes of the per-side deposition limit.

Often, in noticing a 30(b)(6) deposition, a party will seek testimony on its opponent's contentions on issues of infringement and invalidity. Courts are split as

to whether such information can be gathered by deposition or is best left to interrogatory responses. *Compare B&H Mfg., Inc. v. Foster-Forbes Glass Co.*, 23 U.S.P.Q.2d 1397 (N.D. Ind. 1992), *with McCormick-Morgan, Inc. v. Teledyne Indus., Inc.*, 21 U.S.P.Q.2d 1412 (N.D. Cal. 1991). Given that a party's contentions on infringement and invalidity issues are often in flux until after claim construction and expert discovery, objections to depositions on these issues are usually well-founded. The better course of action is to address a party's contentions through interrogatory responses while limiting deposition testimony to factual matters underlying a party's contentions.

4.2.5 Protective Orders—Handling of Confidential Documents

Patent litigation frequently pits direct competitors against each other in a process where some of their most important trade secret information is relevant to the resolution of the case. This is true of both technical data, such as source code and records of product development, and business information, such as financial statements and underlying records of sales and profit calculation. The complexity and sensitivity of information produced in discovery may result in a request for a multi-tiered protective order governing discovery, in which some information is available to the opposing party but restricted to use in the specific litigation ("confidential"), and other more sensitive information is given only to counsel of record and approved experts ("highly confidential" or "attorneys only"). Such orders are fairly common, and although they can be said to interfere with counsel's ability to advise their clients effectively, this objection can be addressed in a more specific context when a party seeks permission to share particular information that had been designated attorneys-only. *See, e.g.*, *Solaia Tech. LLC v. Jefferson Smurfit Corp.*, 2002 U.S. Dist. LEXIS 15666, at *4-5 (N.D. Ill. Aug. 20, 2002).

The advantage of an umbrella protective order is that it allows the information to be provided to opposing counsel in the first instance. Thus, when one side expresses a wish to change the designation of a particular document or set of data (for example, in order to prepare certain client representatives in advance of a settlement conference), the dispute can be informed by reference to actual documents, rather than abstractions.

Protective orders should be entered early in the case. For a sample protective order used in patent litigation, see Appendix 4-1. Most patent litigants will not produce documents without one, and there is no reason to allow this issue to cause any delay in conducting discovery. Many courts will issue a default protective order at the outset of a case. These default orders sometimes do not address every desirable substantive feature of an umbrella protective order—e.g., they may lack a provision that permits confidential documents to be shared with testifying experts—which pushes the parties to reach agreement on the final protective order, even as it does not prevent them from moving forward with discovery. Other

courts, such as the District of Minnesota and the Northern District of California, have more comprehensive protective order forms that are suggested for the parties' use as a template.

In any event, courts should require parties to address the propriety of an umbrella protective order at the initial Case Management Conference if the parties have not already taken up the issue on their own initiative (or pursuant to local rule). There are a few common areas of disagreements with respect to protective orders: (1) over-designation of confidential documents; (2) claw-back provisions; and (3) prosecution bars.

4.2.5.1 Over-Designation of Confidential Documents

Disputes can arise over restrictions on access by particular party representatives. For example, one party may wish to have certain technical information available to an employed engineer or scientist, and to provide financial data to one of its financial officers. Exercising discretion in these disputes will require the court to weigh several considerations, such as the current sensitivity of the data, the difficulty of detecting any misuse, and the level of direct competition that might be put at risk. In addition, the court may want to consider practical issues such as the number of non-lawyers that are proposed to have access and the administrative challenge of keeping track of who has had access to what information.

On the other hand, parties often over-designate confidential information – that is, documents that don't require protection are designated as confidential or highly confidential. This sometimes occurs because the producing party faces a significant challenge in reviewing hundreds of thousands of pages of documents not just for privilege but also to make a judgment call on the level of appropriate access. In an effort to be cost-effective and efficient, parties often "block designate" files from a particular source as highly confidential. For example, files collected from a lead research engineer's file labeled "Strategy for Development of New XYZ Product" might reasonably be assumed to be of a highly confidential nature and might be block designated as such. Inevitably, however, this will result in some over-designation, such as for articles included in the files or e-mails setting up meetings. In such cases, de-designation upon reasonable request of the receiving party is the best and simplest solution.

In cases where designation disputes arise, parties should be strongly encouraged to resolve them without court intervention. Requiring a motion to focus on particular documents is one way to prompt parties to reach their own solution. It is the rare document that absolutely must be provided to an executive of a party's adversary (not just outside counsel) in order for that executive to make a decision about settlement, and yet would cause irreparable harm to the producing party if its adversary's executive had access to it. If parties are required to justify their positions on a document-by-document basis, one side or the other will often see that

the dispute does not warrant court intervention. If the parties persist, referral to a special master or magistrate judge, depending on local practice, may be appropriate.

4.2.5.2 Claw-Back Provisions For Privileged Documents

Another common consequence of the voluminous document discovery in patent litigation is inadvertent production of documents protected by attorney-client privilege and/or work-product doctrine. Such inadvertent production may occur despite diligent efforts by a party to prevent it. For example, large teams of attorneys, including contract attorneys unfamiliar with the actors in a case, may be used to complete document processing in a timely manner. In such cases, a document may be inadvertently produced because the attorney reviewing it did not understand that it was generated by or at the direction of a party's counsel.

Fed. R. Civ. P. 26(b)(5)(B) addresses this situation. A party that believes it has unintentionally produced privileged information may give notice to the receiving party, who must then "promptly return, sequester, or destroy the specified information and any copies it has" and "take reasonable steps to retrieve" any information it has already distributed or disclosed to others. Fed. R. Civ. P. 26(b)(5)(B). Until the claim of inadvertent production is resolved, the producing party is required to preserve the information and the receiving party may not use or disclose it.

Courts should consider including in their protective orders a so-called claw-back provision, which provides some procedural structure to the substantive command of Rule 26. Such provisions often require that a receiving party promptly return or destroy, rather than sequester, allegedly inadvertently produced privileged documents. If a receiving party disputes the privileged nature of the document, it may then make a motion to compel its production.

Of course, Rule 26(b)(5)(B) does not change the substantive law that determines whether privilege was waived by the production. *See* Fed. R. Civ. P. 26(b)(5) (2006 advisory committee notes). Although the principles by which courts decide questions of inadvertent waiver may vary from circuit to circuit, *compare United States ex. rel. Bagley v. TRW, Inc.*, 204 F.R.D. 170, 177 (C.D. Cal. 2001), *with Helman vs. Murry's Steaks, Inc.*, 728 F. Supp. 1099, 1104 (D. Del. 1990), the Advisory Committee reminds courts that they may include parties' agreements regarding issues of privilege and waiver in an order under Rule 16(b)(6), and that such agreements and orders may be considered when deciding whether a wavier has occurred in a particular instance. Fed. R. Civ. P. 26(b)(5) (2006 advisory committee notes).

4.2.5.3 Prosecution Bars

Sometimes a party's litigation counsel also represented—and continues to represent—that party in preparing and prosecuting patent applications in the PTO. In such cases, a protective order that restricts access to sensitive documents to "litigation counsel" offers faint protection to the other party, whose sensitive information might be used—unintentionally—to the competitor's advantage in prosecuting on-going patent applications. To address this concern, courts often include in the protective order a "prosecution bar" that prohibits any attorney prosecuting patents for a party from viewing the confidential information of the party's opponents. Similarly, courts often bar any attorney who has viewed a party's confidential information from preparing or prosecuting patent applications that use or otherwise benefit from the attorney's having viewed the information. Section 4.6.9 discusses motion practice relating to prosecution bars.

4.2.6 Foreign Discovery Issues

It is becoming increasingly common for foreign discovery issues to arise in patent litigation. In part this is because of globalization—not only manufacturing but also research and development are now increasingly performed abroad—and in part this is because the American patent system is perceived to offer advantages that other jurisdictions do not, including strong protection for intellectual property and the availability of broad discovery.

Of course, when a foreign entity is a party to the litigation, discovery may be had through Fed. R. Civ. P. 33-36, just as with any other party. But frequently the party will be a subsidiary of a foreign entity that is not a party, perhaps because of jurisdictional issues. The issue then arises of whether the documents, information, and witnesses of the foreign parent are within the "possession, custody, and control" of the subsidiary. Under the "control" prong, courts may find that documents in the possession of a foreign parent, subsidiary, or affiliate company are in the "control" of the party. For example, a party has been found to "control" the documents at issue when it can ordinarily obtain them in the usual course of its business from the foreign entity. *See, e.g., Alcan Int'l Ltd. v. S.A. Day Mfg. Co., Inc.*, 176 F.R.D. 75, 79 (W.D.N.Y. 1996); *Afros S.P.A. v. Krauss-Maffei Corp.*, 113 F.R.D. 127, 129-32 (D. Del. 1986).

If a foreign entity is not a party, discovery may still be sought through a letter rogatory, or a letter of request to a foreign or international tribunal, under 28 U.S.C. § 1781. International treaties, such as the Hague Convention on Taking of Evidence Abroad in Civil or Commercial Matters, or the Inter-American Convention on Letters Rogatory, provide a procedure whereby the district court can request the assistance of a foreign tribunal. Not every country is a treaty signatory and many signatory countries have taken advantage of the ability to "opt-out" of

the requirement to provide certain types of discovery. Article 23 of the Hague Convention permits signatory countries to make a declaration or a reservation that they "will not execute Letters of Request issued for the purpose of obtaining pre-trial discovery of documents as known in Common Law countries."

The Federal Rules and treaties such as the Hague Convention are not mutually exclusive, but courts should be mindful of principles of international comity and take a supervisory role in foreign discovery disputes. *See Société Nationale Industrielle Aerospatiale v. United States Dist. Ct.*, 482 U.S. 522, 546 (1987). A number of countries (e.g., the United Kingdom, Canada, and France) have enacted "blocking" statutes, which prohibit compliance with foreign discovery orders for the production of evidence located within the blocking state's territory. Blocking statutes often include a penal sanction for violations. Nevertheless, "[i]t is well settled that [foreign "blocking"] statutes do not deprive an American court of the power to order a party subject to its jurisdiction to produce evidence even though the act of production may violate that statute." *Id.* at 544 n.29. Accordingly, in considering whether to compel discovery, courts must balance a variety of factors, including whether compliance with the request would undermine important interests of the state where the information is located. *Id.* at 544 n.28.

4.3 Claim Construction and Discovery

Since claim construction is considered an issue of law and is focused on the fixed, textual language of the patent in suit, one might reasonably ask what discovery can possibly have to do with it. There are two principal answers. First, as the Supreme Court pointed out in the *Markman* decision, claim construction mixes law with fact, the latter consisting of the perspective of one of ordinary skill in the art. In order to decide how such a person would view the claims in light of the intrinsic evidence, the court has to determine the point of view of that person. Discovery can aid in that process. For example, depositions of inventors—whose views on what claim terms mean are of attenuated relevance—may be quite helpful to the process of claim construction by illuminating relevant aspects of the prosecution history or by describing the technology or the state of the art. *Voice Techs. Group, Inc. v. VMC Sys., Inc.*, 164 F.3d 605, 615 (Fed. Cir. 1999).

Second, discovery can reveal the parties' contentions regarding infringement and validity, informing the choice of claim terms requiring construction. This is very important as a practical matter, since many patents contain dozens of claims with hundreds of words or phrases that could potentially be candidates for interpretation. By allowing the parties to conduct sufficient discovery to understand what products are accused of infringement (and why) and what prior art might be asserted against the patent, the court can effectively reduce the number of disputed claim terms that would otherwise be presented for interpretation.

In light of the special utility of this early discovery, courts might consider allowing the parties to phase their discovery efforts, for example by allowing the defendant to take a preliminary deposition of the inventor in aid of claim construction, reserving additional time for other issues.

4.4 Electronic Discovery

In principle, patent cases present the same electronic discovery issues as do other types of litigation. Document requests in patent cases typically call for enormous and costly exchanges of documents. This is not different from antitrust or employment discrimination litigation. But in practice, some factual situations in patent cases pose distinctive challenges.

First, in a patent case, relevant documents can often be much older than they are in other cases. Damages for past infringement can be sought even after a patent has expired—in such a case, documentation of the invention's conception and reduction to practice can be more than twenty years old. Determination of a reasonable royalty is done at the time of first infringement, which likewise can reach back more than six years. Thus patent discovery is directed to a potentially larger and older set of documents, which can dramatically increase the complexity and costs.

Second, because they are usually technology companies, parties in patent cases tend to have adopted new communication techniques earlier than others. As a result, they can have a greater percentage of critical records that are electronic instead of paper. Moreover, because they began using electronic communication media earlier, they have been through more product cycles on average, which means more documents tend to be either lost or inaccessible. In general, the corporate e-mail systems that were used in the mid-1990s are no longer in use today, and resurrecting the systems to recover data can be prohibitively expensive. And an inventor's computer may have been replaced or upgraded several times, losing some information each time.

Because of these factors, courts should be aware that discovery can be particularly difficult for patent litigants and that it sometimes seems that spoliation issues arise more often in patent cases. Many parties find it difficult to understand what documents they have; few have a central repository where all records, especially the oldest, may be found. There is a difference, of course, between searching diligently for electronic records and not finding everything that used to exist, and only searching the most immediately accessible locations and ignoring the rest.

The new Federal Rules dealing with electronically stored information guide courts and parties in dealing with these costly issues in patent cases. Additional and more specific guidance in the form of default orders or committee reports has been provided by many individual districts, such as the District of Delaware (http://www.ded.uscourts.gov/SLR/Misc/EDiscov.pdf) and the District of Kan-

sas (http://www.ksd.uscourts.gov/guidelines/electronicdiscoveryguidelines.pdf). In practice, default orders tend to encourage parties to agree to any necessary case-specific electronic discovery procedures. The Sedona Conference is also a resource for jurists, having published a collection of electronic discovery principles that courts and litigants have relied upon. *See* http://www.thesedonaconference.org/content/miscFiles/publications_html.

4.5 Management of Discovery Disputes

Given the high stakes of patent litigation, lawyers frequently get mired in contentious discovery battles. Effective case management requires that the court discourage this tendency, reserving intervention for only those disputes that matter and that remained unresolved after good faith negotiations between the parties. One way to accomplish this objective is to encourage self-regulation by keeping calendar dates firm so as to avoid the kind of foot-dragging that can occur if extensions of time are easily available. Many judges issue special warnings to counsel in patent cases, threatening to call in principals of the parties if discovery becomes too contentious. Some courts set a presumptive limit on the number of discovery motions that will be heard (e.g., three), after which a discovery special master will be appointed. An increasingly common procedure requires the parties to submit a letter (not to exceed two pages) in advance of a telephone conference, asking for permission to file a motion; typically the issues are resolved on the conference call. In general, courts should emphasize to counsel the importance of the meet and confer process, requiring in-person meetings where necessary. Where the court deems it necessary to impose sanctions, experience shows that progressive penalties (from mild to severe, including issue and evidence preclusion or default) are effective at controlling discovery abuses in patent cases.

Referrals to magistrate judges for discovery issues are commonplace in many courts. The advantage of referring discovery issues is that it frees the district judge for other work, while keeping responsibility for discovery helps the district judge remain aware of the case and coordinate discovery and scheduling issues. Moreover, there is a certain *in terrorem* effect at work when the district court hears discovery disputes. Litigants may be less likely to raise as many disputes and will likely be more conciliatory if the judge deciding the case has a greater opportunity to assess whether counsel are being unreasonable. Where referral is the common practice, experienced counsel soon learn the tendencies of the magistrate judges on particular issues, resulting in fewer motions. If this doesn't happen, or if the case otherwise appears likely to generate a disproportionate level of discovery controversy, courts may require the parties to engage a special master under Rule 53. When the master brings substantial experience with patent litigation, the resulting process, although sometimes costly, can be substantially more efficient and effective overall.

4.6 Common Discovery Motions

What follows is a list of the most common discovery motions that raise patent-specific issues, with recommended approaches or outcomes.

4.6.1 Discovery Regarding Patentee's Pre-Filing Investigation

The accused infringer may challenge the basis for the patentee's having filed suit. Normally this would happen in the context of a Rule 11 motion. The Federal Circuit has laid out guidelines for patent cases describing a minimum investigation, including preparation of a claim chart that matches elements of the patent claims to the accused product. *Antonious v. Spalding & Evenflo Cos., Inc.*, 275 F.3d 1066, 1073-74 (Fed. Cir. 2002); *View Eng'g, Inc. v. Robotic Vision Sys., Inc.*, 208 F.3d 981, 986 (Fed. Cir. 2000). Generally speaking, the requirements for a pre-filing investigation are much more stringent than the Rule 8 notice pleading standard. *See McZeal v. Sprint Nextel Corp.*, 501 F.3d 1354, 1356-57 (Fed. Cir. 2007); *see also id.* at 1359-60 (Dyk, J., dissenting in part). The patentee may submit its records of investigation for *in camera* review, in order to meet the challenge while still preserving work-product protection. *See, e.g.*, *Centillion Data Sys., LLC v. Convergys Corp.*, 2006 U.S. Dist. LEXIS 846, at *3 n.1 (S.D. Ind. Jan. 4, 2006); *see also* Fed. R. Civ. P. 11 advisory committee notes (1983 Amendment).

Occasionally, the issue arises outside of the Rule 11 context, where a dispute over infringement contentions, for example, leads a defendant to request discovery of the patentee's pre-filing investigation. In the absence of waiver, the best practice is to deny such discovery. However, the patentee may be required early in the proceeding, either through traditional contention discovery or as a result of Patent Local Rules, to describe its infringement position, without revealing what it did to analyze the accused product before filing. *See, e.g.*, *O2 Micro Int'l, Ltd. v. Monolithic Power Sys., Inc.*, 467 F.3d 1355, 1365-66 (Fed. Cir. 2006); *Nova Measuring Instruments Ltd. v. Nanometrics, Inc.*, 417 F. Supp. 2d 1121, 1123 (N.D. Cal. 2006).

4.6.2 Production of Information About Products

The patentee may make an early request for production of the accused product by inspection, samples, or (in the case of software or a circuit, for example) copies. The defendant may resist on the grounds that the information is a trade secret and that the patentee should already have met its obligations under Rule 11 to investigate and compare the patent claims to the accused product. This position, however, assumes that the product could have been available to the patentee outside of the discovery process. Some products, such as software or processes, cannot reasonably be accessed before filing litigation, and the patentee must rely on indirect

evidence such as marketing materials in making its analysis. *See, e.g.*, *Intamin Ltd. v. Magnetar Techs. Corp.*, 483 F.3d 1328, 1338 (Fed. Cir. 2007). In that event, best practice dictates that the product or copies be made available to the patentee in discovery, subject to the terms of a protective order to maintain confidentiality.

Each side in patent litigation may seek information about the other's "unannounced" products still in development. This is relevant for the patentee because it wants protection against future infringement and because pending changes in the accused products can be probative of willfulness. It is also a legitimate inquiry for accused infringers, because the application by the patentee of its claimed invention can have a bearing on damages. As with early production relating to the accused product, the best approach is to allow discovery, subject to orders that maintain security of the confidential data.

4.6.3 Contentions About Infringement, Invalidity, and Unenforceability

In courts without Patent Local Rules, early discovery disputes are likely to focus on contentions, as the accused infringer challenges the patentee to articulate its arguments on infringement while the patentee tries to force the accused infringer to explain why it doesn't infringe and why it thinks the patent is invalid. Indeed, it was the frequency of such disputes that motivated the adoption of special patent rules. The key to solving this problem lies in understanding the parties' respective burdens and how positions naturally evolve in patent litigation.

As noted previously, patentees are expected to comply with their Rule 11 obligations by carefully comparing the patent claims to the accused product. Therefore, one would assume that any patentee would have a precise sense of its infringement theory at the outset. However, there are two major issues that can make that expectation unrealistic. First, the patentee may not have been able to get access to the necessary information because it is hidden from view (for example, source code); or the product is unavailable (for example, because of tightly controlled distribution); or because the target is a process that is only used behind closed doors. In these circumstances, a patentee has to make an educated guess about infringement from the information that is publicly available and rely on early discovery to illuminate the details. Second, because the claim construction process lies ahead, the patentee will be reluctant to commit to a position that depends on particular interpretations of the claim language.

The defendant is in a comparable situation at the outset of the case, since it needs to know what the claims mean before it can have a clear view of why it does not infringe. In the same vein, the defendant's invalidity contentions, in particular defenses like inadequate written description under § 112, may depend on the outcome of claim construction. And as for defenses under §§ 102 and 103, these

contentions require time for investigation of the prior art and discovery of the plaintiff's invention and sales records.

Best practice in this environment requires a combination of flexibility (to accommodate the reasonable constraints faced by each party) and pressure (to force movement and expressions of position that can later be refined). Frequently district courts have imposed a process that draws from the experience of Patent Local Rules, setting a schedule for preliminary contentions, followed by a more committed position following issuance of a claim construction order.

Unenforceability (inequitable conduct) raises a separate but related concern. Because this defense basically asserts fraud on the PTO, the particularity requirements of Rule 9 require that the accused infringer be quite specific about the underlying basis for the charge. *Ferguson Beauregard/Logic Controls, Inc. v. Mega Sys., LLC*, 350 F.3d 1327, 1344 (Fed. Cir. 2003). However, as in other kinds of fraud, the detailed facts, especially those related to materiality and intent, will require substantial discovery before the proponent can be expected to provide a full explanation of the charge.

4.6.4 Bifurcation or Stay of Discovery Pending Re-examination of Patent

As described in § 11.2.6.4, anyone can request that the PTO institute a "re-examination" proceeding to take a second look at the validity of a patent. Such requests are increasingly common in general and occur more often in the shadow of patent litigation. Within two or three months after the request is made, the PTO will decide whether the application presents a "substantial new question of patentability," and if so will proceed with the reexamination. The outcome can range from no change, to substantial narrowing amendments to the claims, to outright rejection of all the claims.

Given these dramatically different results, it can make sense for a district court to stay an action pending reexamination in order to avoid wasted efforts. A jury trial is very burdensome on the court, the citizens called to jury duty, and the parties. It would be a waste if the case is tried to a jury, only to have the PTO declare the patent invalid after judgment is rendered. Courts should not disregard Congress's intent that reexamination "permit efficient resolution of questions about the validity of issued patents without recourse to expensive and lengthy infringement litigation." H.R. Rep. No. 96-1307, pt. 1, at 3-4 (1980).

However, there are several factors that may prompt a court to proceed toward trial during reexamination. Most important of these is the timing of the reexamination request; if made late in the litigation, it is more likely to represent a tactical move for delay. *See, e.g.*, *Telemac Corp. v. Teledigital, Inc.*, 450 F. Supp. 2d 1107, 1111 (N.D. Cal. 2006). Keep in mind that the re-examination process can take two years or more, and the best resolution for the parties may come from keeping

the case on track for trial. Second, because re-examination is limited to consideration of printed publications and patents, there may be other validity issues that can only be addressed by a court, such as the "on-sale bar" or questions of enablement, best mode, and written description. Where it appears likely that these other issues will dominate the validity inquiry, it makes less sense to stay the entire action in favor of a pending re-examination.

Another critical issue is whether discovery should be stayed pending re-examination. Where there would be substantial overlap in that discovery with what may still be going on in the case following invalidation of the re-examined claims, it may well be more efficient and equitable to allow some discovery to proceed.

A partial stay of discovery in a patent case, however, is very difficult to enforce, since there are no bright-line borders for relevance. What may appear as a time-saving hold on some issues may actually result in more time spent resolving disputes over the boundaries of the discovery stay.

There are advantages in staying the entire litigation pending re-examination, above and beyond the chance that all asserted patent claims are cancelled. The re-examination process usually requires a patent owner to make claim amendments in order to answer rejections made by the PTO. These amendments may be helpful to a court deciding issues of claim construction and infringement under the doctrine of equivalents. For this reason, it may seem inequitable to allow a patent owner to proceed to trial on a particular infringement theory and then later make arguments in the re-examination that are inconsistent with that theory. A stay (even a partial stay) would prevent such strategic behavior.

Strategic behavior may exist on the other side as well. An accused infringer can request re-examination multiple times, slowing the process (though the PTO has changed its practices to make this tactic much less effective). A defendant could also request re-examination of the plaintiff's patent even as it files a patent infringement claim of its own, in the same court or a different court. If stay is granted pending re-exam, the defendant's patent counterclaim might well wind up going ahead of the plaintiff's patent claims, even if the plaintiff also seeks re-examination of the defendant's patent. So it is important for a court to have information about all the disputes between the parties, not just the court's case.

Something of a middle ground is a wait-and-see approach—allowing a case to proceed towards trial, but leaving for the end of the case the decision to conduct a trial. By the time the parties finish discovery or substantive motion practice, there may have been some significant events in the re-examination that provide a grounded basis for deciding that trial should be postponed until the conclusion of the re-examination proceeding. In this way, a court need not make a decision solely on the statistics argued by the parties at the outset (e.g., the average duration of re-examinations or what percentage of re-examinations end with all claims cancelled). Instead, the decision whether to stay the case can be based on particular-

ized considerations (e.g., when this re-examination is likely to finish or whether the PTO has accepted or rejected the patent owner's arguments).

In deciding whether to stay a case, courts can also look to considerations analogous to those considered in association with injunctions. Has the patent owner shown that it will be unduly prejudiced (or irreparably harmed) by being deprived, longer than necessary, of the right to exclude others from making, using, or selling the patented invention? Has the patent challenger shown the patent owner will be sufficiently compensated by money damages if the infringement claim is ultimately successful?

The decision to stay is discretionary, and given the many factors to be considered there should be no default rule. Instead, each decision to stay is best judged on a case-by-case basis. It should be clear from the foregoing, however, that courts need not limit their analysis to a consideration of whatever current re-examination statistics are presented to them.

4.6.5 Bifurcation or Stay of Discovery Pending Early Dispositive Motion

Sometimes a case presents obvious issues for early termination, and in patent cases this could arise from a jurisdictional challenge (e.g., personal jurisdiction, ownership), *see, e.g.*, *Mullally v. Jones*, 2007 U.S. Dist. LEXIS 30283, at *6-7 (D. Nev. Apr. 20, 2007), or from a challenge to infringement that depends entirely on a specific question of claim construction, *see, e.g.*, *Cornell Research Found., Inc. v. Hewlett Packard Co.*, 223 F.R.D. 55, 58 (N.D.N.Y. 2003). In these situations, it may be appropriate to limit discovery to the single issue to enable the parties to prepare a dispositive motion. Although some questions may arise about whether specific discovery is within the bounds set by the court, the amount of time necessary to resolve that sort of controversy is generally more than offset by the potential savings through early termination.

4.6.6 Bifurcation or Stay of Discovery on Issues Bifurcated for Trial

District courts sometimes bifurcate issues for trial in patent cases. Most common are a counterclaim for antitrust based on an allegation that the patent complaint is a sham, *In re Innotron Diagnostics*, 800 F.2d 1077 (Fed. Cir. 1986), the defense of inequitable conduct, *Gardco Mfg., Inc. v. Herst Lighting Co.*, 820 F.2d 1209 (Fed. Cir. 1987), and a plaintiff's assertion of willfulness, *Medpointe Healthcare, Inc. v. Hi-Tech Pharmacal Co., Inc.*, 2007 U.S. Dist. LEXIS 4652, at *17 (D. N.J. Jan. 22, 2007). We address the risks and potential rewards of this discretionary decision to divide up the trial in section 8.1.1.

But having made or entertained the idea of trial bifurcation, courts will also need to consider whether discovery should go forward on the bifurcated issue. Here, unless a primary driver of the decision to bifurcate is to save time and other complications in discovery (as is often true in bifurcating willfulness, for example), the best practice is to presume that discovery should go forward on all issues. *See, e.g.*, *Ecrix Corp. v. Exabyte Corp.*, 191 F.R.D. 611, 614 (D. Colo. 2000). In this way, the parties will be prepared to proceed immediately with trial on the bifurcated issue if it becomes relevant, the court will be spared the difficulty of drawing lines about what is relevant for discovery, and the parties will be fully informed on all the issues for purposes of settlement discussions. On the other hand, when an essential element of a claim is related to the outcome of another claim in the suit, as in a sham litigation antitrust counterclaim, it may make more sense to stay the one claim in its entirety (including discovery) until the underlying claim is adjudicated. *See Prof. Real Estate Investors, Inc. v. Columbia Pictures, Inc.*, 508 U.S. 49, 60 (1993) (affirming grant of summary judgment against antitrust counterclaim, though further discovery into anticompetitive intent had been denied by the district court, holding that "[o]nly if challenged litigation is objectively meritless may a court examine the litigant's subjective motivation."). After all, a "winning lawsuit is by definition a reasonable effort at petitioning for redress and therefore not a sham." *Id.* at 60 n.5.

4.6.7 Privilege Waiver Based on Defendant's Election to Rely on Advice of Counsel

Although it seemed that motion practice regarding privilege waiver scope has been increasing in recent years, the Federal Circuit's recent en banc decision in *Seagate* may reduce that problem. *In re Seagate Tech. LLC*, 497 F.3d 1360 (Fed. Cir. 2007) (en banc). The Federal Circuit now holds that disclosing an opinion of counsel to support an advice-of-counsel defense does not extend the waiver to trial counsel. *Id.* at 1372-75. The same rationale applies to the work-product doctrine as well, protecting from discovery the sometimes voluminous and provocative thoughts and strategies of litigation counsel. *Id.* at 1375-76. The Federal Circuit left unanswered the question of what to do when opinion counsel and trial counsel are from the same firm, or even the same person. The *Seagate* decision depends in part upon a change in the Federal Circuit's willfulness jurisprudence, to bring it in line with recent Supreme Court opinions with respect to punitive damages. *See Safeco Ins. Co. of Am. v. Burr*, 551 U.S. 47, 127 S. Ct. 2201, 2209, 2214-15, 2216 n.20 (2007); *McLaughlin v. Richland Shoe Co.*, 486 U.S. 128, 133 (1988); *Smith v. Wade*, 461 U.S. 30, 39-49 (1983); *In re Seagate Tech. LLC*, 497 F.3d at 1370-71. This is an area of the law that will continue to evolve as trial courts explore the subtleties of the new course set in *Seagate*.

4.6.8 Discovery from Patent Prosecution Counsel

A claim of patent infringement by itself does not usually require taking discovery from the lawyer who prosecuted the application before the PTO. Whatever happened in prosecution is a matter of record, and claim construction issues are decided based on that "intrinsic" record. *See* § 5.2.2. For example, if the defendant asserts that a statement by the patentee to the PTO should be considered as a "disclaimer" of claim scope, normally the court would not hear testimony from the patent lawyer to explain what was said or why it was said. Therefore, while inventor testimony is almost always taken during discovery, the same is not true of the patent lawyer.

That is not to say, however, that patent prosecutors are never or even seldom deposed. In many cases the defense of unenforceability will be asserted based on allegations of inequitable conduct in the procurement of the patent. Most often this consists of a failure to disclose certain prior art, but it can also involve mischaracterization of the art that was submitted, or other misstatements made to the PTO. In those cases, the patent attorney is almost always deposed.

As in other areas of the law, attorney testimony raises issues of work-product protection and privilege. In the patent prosecution context, the general rule is that the attorney-client privilege applies to communications between the inventor and the prosecuting attorney, but there is no protection against discovery of communications, whether written or oral, between the patent prosecutor and the PTO. *In re Spalding Sports Worldwide, Inc.*, 203 F.3d 800 (Fed. Cir. 2000); *Winbond Elecs. Corp. v. ITC*, 2001 U.S. App. LEXIS 25113, at *30-31 (Fed. Cir. Aug. 22, 2001). Courts generally find that work performed by an attorney to prepare and prosecute a patent application does not fall within the parameters of the work-product protection because it is usually part of a non-adversarial, ex parte proceeding. *See, e.g.*, *In re Minebea Co.*, 143 F.R.D. 494, 499 (S.D.N.Y. 1992). Accordingly, work done to that end is not usually "in anticipation of" or "concerning" litigation. Discovery disputes in this context often test the application of this rule. *See, e.g.*, *Rowe Int'l Corp. v. Ecast, Inc.*, 241 F.R.D. 296, 300-01 (N.D. Ill. 2007); *Bd. of Trs. of the Leland Stanford Junior Univ. v. Roche Molecular Sys., Inc.*, 237 F.R.D. 618, 623-25 (N.D. Cal. 2006). Indeed, the work-product doctrine can protect work performed to prosecute a patent application if it was *also* performed in anticipation of or concerning litigation. *Minebea*, 143 F.R.D. at 499.

In practice, discovery taken from patent prosecutors may not be very helpful, either because memories have lapsed with the passage of time, or because many prosecutors' typical practice is to purge their files of all non-essential papers (such as drafts) once the patent has issued. There is nothing intrinsically wrong with this practice, but of course it is inconsistent with a later assertion of work-product protection. If litigation was indeed anticipated, a patent prosecutor was duty-bound to preserve potential evidence, and nothing should have been discarded.

Occasionally the lawyer who prosecuted the patent application also serves as counsel of record in the litigation. Here, the lawyer's choice to act as both advocate and witness is necessarily awkward, but the authority that bars taking deposition of trial counsel will usually not apply. *See, e.g.*, *Plymouth Indus., LLC v. Sioux Steel Co.*, 2006 U.S. Dist. LEXIS 14706, at *14-15 (D. Neb. Mar. 17, 2006); *Genal Strap, Inc. v. Dar*, 2006 U.S. Dist. LEXIS 11474, at *6-10 (E.D.N.Y. Mar 3, 2006); *aaiPharma, Inc. v. Kremers Urban Dev. Co.*, 361 F. Supp. 2d 770, 774-75 (N.D. Ill. 2005); *Alcon Labs., Inc. v. Pharmacia Corp.*, 225 F. Supp. 2d 340, 344 (S.D.N.Y. 2002); *Amicus Commc'ns, L.P. v. Hewlett-Packard Co.*, 1999 U.S. Dist. LEXIS 20901, at *4-5 (D.D.C. Dec. 3, 1999); *Environ Prods. v. Total Containment*, 41 U.S.P.Q.2d (BNA) 1302, at *11-14 (E.D. Pa. Aug. 21, 1996). In general, the prosecutor should receive no special dispensation from discovery merely because of the decision to also act as litigation counsel, but privilege and work product protections will normally apply to communications made and information developed in the context of litigation rather than prosecution. To resolve such contextual issues, the court may have to examine relevant material in camera. *See Quantum Corp. v. Tandon Corp.*, 940 F.2d 642, 644 (Fed. Cir. 1991). Whether the prosecutor as litigator requires disqualification is a matter of the ethics rules of a particular jurisdiction. *See, e.g.*, *Gen. Elec. Co. v. Industra Prods., Inc.*, 683 F. Supp. 1254, 1258 (N.D. Ind. 1988).

4.6.9 Access to Confidential Information by Patent Prosecution Counsel

In settling on the form of an umbrella protective order, a dispute may arise over whether a party's patent prosecution lawyers may appear as counsel of record in the litigation and therefore have access to attorneys-only information. The advantage to the requesting party is easy to understand: its patent attorneys already have experience with the technology and their participation on the litigation team will enhance efficiency. This perceived advantage, as well as the natural deference owed to a party's choice of counsel, must be weighed against the risk that such access might pose to the other side.

Much of the risk arises from the fact that a single patent can spawn a family of later patents on the same subject. These "continuation" applications seek to fashion better claims based on the same original disclosure. Indeed, it is common and acceptable for a patentee to draft later claims that precisely target the products of a competitor. *Kingsdown Med. Consultants, Ltd. v. Hollister, Inc.*, 863 F.2d 867, 874 (Fed. Cir. 1988). But the fairness of that practice presumes that such claims are drafted based on *public* information. When a patent prosecutor gets access to attorneys-only information in litigation, this can open a door into the details of secret projects and provide an unfair advantage. Because of this concern, a number of courts have imposed a "prosecution bar" as part of the normal discovery protec-

tive order. In its most typical form, the provision bars any lawyer having access to designated information from participating in prosecution of patents in a particular subject during the pendency of the litigation and a year after its termination. If it appears that a prosecution bar is appropriate, the dispute may devolve to the subject matter restriction, with the proponent of the bar arguing for a broad area, and the resisting party proposing only the particular patent family being prosecuted on behalf of that party. *See, e.g.*, *Cummins-Allison Corp. v. Glory Ltd.*, 2003 U.S. Dist. LEXIS 23653, at *31-33 (N.D. Ill. Dec. 31, 2003).

The decision on whether to impose a prosecution bar, and its conditions, should be informed by such factors as (a) the level of competition and sensitivity of the data; (b) the attorney's role in ongoing prosecution; (c) the size of the attorney's firm and effectiveness of any proposed ethical walls; (d) the availability of other counsel to handle the litigation; and (e) whether the attorney participated in prosecution of the patent in suit and therefore may be called as a witness. *See, e.g.*, *Commissariat a L'Energie Atomique v. Dell Computer Corp.*, 2004 U.S. Dist. LEXIS 12782 (D. Del. 2004); *Motorola, Inc. v. Interdigital Tech. Corp.*, 1994 U.S. Dist. LEXIS 20714 (D. Del. 1994); *see also U.S. Steel Corp. v. United States*, 730 F.2d 1465, 1468 (Fed. Cir. 1984).

4.6.10 License Agreements and Other Third-Party Confidential Information

Damage calculations in a patent case depend on assessment of a number of factors, including licenses entered into by either party for the relevant technology or for comparable intellectual property. *See Georgia-Pacific Corp. v. United States Plywood Corp.*, 318 F. Supp. 1116 (S.D.N.Y. 1970). Many of these agreements are confidential and competitively sensitive, sometimes involving rights of third parties. Therefore, a common area of dispute is the discoverability of proprietary license agreements. The resisting party may argue that they are not sufficiently comparable to provide relevant information or that they interfere with obligations of confidentiality to a non-party. A court's decision should be guided not only by resolving those arguments as factual predicates, but also by the terms of any protective order that might diminish the risk of harm from production. *See, e.g.*, *Rates Tech., Inc. v. Cablevision Sys. Corp.*, 2006 U.S. Dist. LEXIS 19668, at *5 (E.D.N.Y. Apr. 14, 2006); *Anchor Plastics Co. v. Dynex Indus. Plastics Corp.*, 184 U.S.P.Q. (BNA) 482 (D.N.J. 1974). Discovery is normally allowed and use at trial is decided later with a fuller record on relatedness.

Other common ways that third party interests arise in patent litigation include product development, prior art, and users of an accused device. In the first category, third parties may have been involved, through a joint venture or other collaborative relationship, in the discovery of the claimed invention; and the circumstances may lead to questions about ownership, standing, or other matters bearing

on validity. In the second category are companies or individuals believed to have published or practiced the relevant technology before the patentee claims to have conceived of it. The third category comprises users of the accused product whose use of it (for example, combining it into a bigger product that itself infringes) may be relevant to proving contributory infringement or inducement, or demonstrating commercial success. All of these third parties may resist discovery because it is claimed to be unduly burdensome; and indeed their status as outsiders to the dispute is entitled to some consideration. *See, e.g., Katz v. Batavia Marine & Sporting Supplies, Inc.*, 984 F.2d 422, 424 (Fed. Cir. 1993). Third parties may also object because the requested information is extremely sensitive and should not be made available to an arch-competitor. These objections, while legitimate, are usually met by the terms of a protective order that appropriately limits access and use of the information. However, sometimes the information, while relevant and protectable in the abstract, may be sought in ways that inappropriately threaten damage to customer relationships. In such circumstances, the court may issue a protective order requiring a heightened showing of need before the discovery goes forward. *See, e.g., Joy Techs, Inc. v. Flakt, Inc.*, 722 F. Supp. 842 (D. Del. 1991).

Appendix 4.1
Protective Order, Eastern District of Texas

IN THE UNITED STATES DISTRICT COURT
FOR THE EASTERN DISTRICT OF TEXAS

V. §
§
§
§
§
§
§

PROTECTIVE ORDER

The Court, *sua sponte*, issues this Protective Order to facilitate document disclosure and production under the Local Rules of this Court and the Federal Rules of Civil Procedure. Unless modified pursuant to the terms contained in this Order, this Order shall remain in effect through the conclusion of this litigation.

In support of this order, the court finds that:

1. Documents or information containing confidential proprietary and business information and/or trade secrets ("Confidential Information") that bear significantly on the parties' claims or defenses is likely to be disclosed or produced during the course of discovery in this litigation;

2. The parties to this litigation may assert that public dissemination and disclosure of Confidential Information could severely injure or damage the party disclosing or producing the Confidential Information and could place that party at a competitive disadvantage;

3. Counsel for the party or parties receiving Confidential Information are presently without sufficient information to accept the representation(s) made by the party or parties producing

Confidential Information as to the confidential, proprietary, and/or trade secret nature of such Confidential Information; and

4. To protect the respective interests of the parties and to facilitate the progress of disclosure and discovery in this case, the following Order should issue:

IT IS THEREFORE ORDERED THAT:

1. Documents or discovery responses containing Confidential Information disclosed or produced by any party in this litigation are referred to as "Protected Documents." Except as otherwise indicated below, all documents or discovery responses designated by the producing party as "Confidential" and which are disclosed or produced to the attorney's for the other parties to this litigation are Protected Documents and are entitled to confidential treatment as described below.
2. Protected documents shall not include (a) advertising materials, (b) materials that on their face show that they have been published to the general public, or (c) documents that have submitted to any governmental entity without request for confidential treatment.
3. At any time after the delivery of Protected Documents, counsel for the party or parties receiving the Protected Documents may challenge the Confidential designation of all or any portion thereof by providing written notice thereof to counsel for the party disclosing or producing the Protected Documents. If the parties are unable to agree as to whether the confidential designation of discovery material is appropriate, the party or parties receiving the Protected Documents shall certify to the Court that the parties cannot reach an agreement as to the confidential nature of all or a portion of the Protected Documents. Thereafter, the party or parties disclosing or producing the Protected Documents shall

have ten (10) days from the date of certification to file a motion for protective order with regard to any Protected Documents in dispute. The party or parties producing the Protected Documents shall have the burden of establishing that the disputed Protected Documents are entitled to confidential treatment. If the party or parties producing the Protected Documents do not timely file a motion for protective order, then the Protected Documents in dispute shall no longer be subject to confidential treatment as provided in this Order. All Protected Documents are entitled to confidential treatment pursuant to the terms of this Order until and unless the parties formally agree in writing to the contrary, a party fails to timely move for a protective order, or a contrary determination is made by the Court as to whether all or a portion of a Protected Document is entitled to confidential treatment.

4. Confidential Treatment. Protected Documents and any information contained therein shall not be used or shown, disseminated, copied, or in any way communicated to anyone for any purpose whatsoever, except as provided for below.

5. Protected Documents and any information contained therein shall be disclosed only to the following persons ("Qualified Persons"):

   (a) Outside counsel of record in this action for the party or party receiving Protected Documents or any information contained therein;

   (b) Employees of such counsel (excluding experts and investigators) assigned to and necessary to assist such counsel in the preparation and trial of this action; and

   (c) The Court.

   Protected documents and any information contained therein shall be used solely for the prosecution of this litigation.

6. Outside counsel of record for the party or parties receiving Protected Documents may create an index of the Protected Documents and furnish it to attorneys of record representing or having represented parties involved in litigation involving the claims alleged in this suit against the party or parties disclosing or producing the Protected Documents. The index may only identify the document, date, author, and general subject matter of any Protected Document, but may not reveal the substance of any such document. Counsel for the party or parties receiving Protected Documents shall maintain a current log of the names and addresses of persons to whom the index was furnished.
7. The term "copy" as used herein means any photographic, mechanical or computerized copy or reproduction of any document or thing, or any verbatim transcript, in whole or in part, of such document or thing.
8. To the extent that Protected Documents or information contained therein are used in depositions, such documents or information shall remain subject to the provisions of this Order, along with the transcript pages of the deposition referring to the Protected Documents or information contained therein.
9. Any court reporter or transcriber who reports or transcribes deposition testimony in this action shall agree that all "confidential" information designated as such under this Order shall remain "confidential" and shall not be disclosed by them, except pursuant to the terms of this Order, and that any notes or transcriptions of such deposition testimony (and any accompanying exhibits) will be retained by the reporter or delivered to counsel of record.

10. Inadvertent or unintentional production of documents or information containing Confidential Information which are not designated "confidential" shall not be deemed a waiver in whole or in part of a claim for confidential treatment.

11. The party or parties receiving Protected Documents shall not under any circumstances sell, offer for sale, advertise, or publicize Protected Documents or any information contained therein.

12. After termination of this litigation, the provisions of this Order shall continue to be binding, except with respect to those documents and information that become a matter of public record. This Court retains and shall have continuing jurisdiction over the parties and recipients of the Protected Documents for enforcement of the provisions of this Order following termination of this litigation.

13. Upon termination of this action by dismissal, judgment, or settlement, counsel for the party or parties receiving Protected Documents shall return the Protected Documents to the counsel for the party or parties disclosing or producing the Protected Documents. The party or parties receiving the Protected Documents shall keep their attorney work product which refers or relates to any Protected Documents. Attorney work product may be used in subsequent litigation provided that such use does not disclose Protected Documents or any information contained therein.

14. This Order shall be binding upon the parties and their attorneys, successors, executors, personal representatives, administrators, heirs, legal representatives, assigns, subsidiaries, divisions, employees, agents, independent contractors, or other persons or organizations over which they have control.

15. The Court anticipates that the parties may file a motion to modify the terms hereof with respect to the sharing of Protected Documents with experts and consultants; shifting the cost burden of production equitably; and other terms that may be reasonably required to protect a party as provided in Rule 26(b) or (c) of the Federal Rules of Civil Procedure. So ORDERED AND SIGNED this _____ day of _____ .

_____

United States District Judge

Chapter 5
Claim Construction

5.1 Timing and Procedure
- 5.1.1 Timing of *Markman* Hearings
- 5.1.2 Pre-*Markman* Procedures
  - 5.1.2.1 Mandatory Disclosure of Positions
    - 5.1.2.1.1 Early Disclosure of Infringement and Invalidity Contentions
    - 5.1.2.1.2 Disclosure of Claims to Construe and Proposed Constructions
    - 5.1.2.1.3 Mechanisms for Limiting the Number of Claims Terms to Construe
      - 5.1.2.1.3.1 Severance Versus Postponement
    - 5.1.2.1.4 Recommended Approach: Mandatory Disclosure of Impact of Proposed Constructions
  - 5.1.2.2 Educating the Court About Underlying Science and Technology
    - 5.1.2.2.1 Technology Tutorials
      - 5.1.2.2.1.1 Anticipating the Need for an Appellate Record
    - 5.1.2.2.2 Court-Appointed Experts
      - 5.1.2.2.2.1 Technical Advisor
      - 5.1.2.2.2.2 Special Master
      - 5.1.2.2.2.3 Expert Witness
- 5.1.3 Conduct of the *Markman* Hearing
  - 5.1.3.1 The "Evidentiary" Nature of *Markman* Hearings
  - 5.1.3.2 Application of the Federal Rules of Evidence
  - 5.1.3.3 Safeguards on Extrinsic Evidence
  - 5.1.3.4 Evidence of the Accused Device
  - 5.1.3.5 Evidence of the Prior Art
  - 5.1.3.6 The Need to Focus *Markman* Proceedings on Claim Interpretation
  - 5.1.3.7 Sequence of Argument
- 5.1.4 The *Markman* Ruling
  - 5.1.4.1 Interrelationship to Jury Instructions
  - 5.1.4.2 Basis for Appellate Review
  - 5.1.4.3 Not All Terms Require "Construction"
  - 5.1.4.4 The Court May Adopt Its Own Construction
  - 5.1.4.5 Tentative Rulings Prior to the *Markman* Hearing
- 5.1.5 Amendments to Infringement and Invalidity Contentions
- 5.1.6 Interlocutory Appeal of *Markman* Rulings
- 5.1.7 Application of the *Markman* Ruling to Trial

5.2 Analytic Framework and Substantive Principles
- 5.2.1 Claim Drafting: The Genesis and Evolution of Claim Terms
- 5.2.2 Sources for Deriving Claim Meaning
  - 5.2.2.1 Principal Source: Intrinsic Evidence
    - 5.2.2.1.1 Prosecution History
    - 5.2.2.1.2 Related and Foreign Applications
  - 5.2.2.2 Extrinsic Evidence Permissible, But It May Not Contradict or Override Intrinsic Evidence
    - 5.2.2.2.1 Illustrations of Reliance (and Non-Reliance) Upon Extrinsic Evidence
    - 5.2.2.2.2 Conclusory Expert Opinions Should Be Disregarded
- 5.2.3 Claim Construction: Two Stages of Analysis
  - 5.2.3.1 Step 1: Is Construction of a Claim Required
    - 5.2.3.1.1 Is There a Genuine Dispute About the Claim Term?
    - 5.2.3.1.2 Would Claim Construction Help the Jury?
    - 5.2.3.1.3 Is Claim Construction a Priority?
    - 5.2.3.1.4 Have the Claims Been Construed Before?

5.2.3.1.5 Is the Term Amenable to Construction?
5.2.3.1.5.1 Lay Terms
5.2.3.1.5.2 Terms of Degree
5.2.3.1.5.2.1 The Court Should Not Delineate Terms of Degree "Where the Patent Provides No Standard"
5.2.3.1.5.2.2 The Appropriate Standard for Defining or Declining to Define Terms of Degree
5.2.3.1.5.3 Technical Terms
5.2.3.2 Step 2: Interpretation of Claim Terms
5.2.3.2.1 Claim Construction Framework
5.2.3.2.2 Starting Point for Analysis: "Ordinary Meaning"
5.2.3.2.2.1 "Presumption of Dictionary Definition" Obsolete
5.2.3.2.2.2 No "Heavy Presumption" of Ordinary Meaning; No Requirement of Explicit Definition in Order to Depart from Ordinary Meaning
5.2.3.2.3 Interpreting Claim Language in Light of the Specification
5.2.3.2.3.1 The Role of Preferred Embodiments in Claim Construction
5.2.3.2.3.1.1 Claim Scope Generally Includes Preferred Embodiments
5.2.3.2.3.1.2 Is the Patent Limited to the Preferred Embodiments?
5.2.3.2.3.1.3 Does the Number and/or Range of Embodiments Affect the Scope of the Claims?
5.2.3.2.3.1.4 Does Ambiguity in a Claim Term Limit its Scope to Preferred Embodiment(s)?
5.2.3.2.3.1.5 Characterizations of "The Invention" or "The Present Invention"
5.2.3.2.3.2 Distinctions Over the Prior Art
5.2.3.2.3.3 Consistent Usage of Claim Terms
5.2.3.2.3.4 Prosecution Disclaimers
5.2.3.2.4 Looking to Other Claims: The Doctrine of Claim Differentiation
5.2.3.2.4.1 Presumption of Claim Differentiation May Be Rebutted Based on Specification or Prosecution History Estoppel
5.2.3.2.4.2 Presumption of Claim Differentiation Does Not Apply to Means Plus Function Claims
5.2.3.2.5 Significance of the "Preamble" in Claim Construction
5.2.3.3 Claim Terms Having Conventional, Presumed, or Established Meanings
5.2.3.4 Interpreting Terms to Preserve Validity
5.2.3.5 Special Case: Means-Plus-Function Claims Limited to Structures in Specification and Equivalents Thereof as of Time of Issuance
5.2.3.5.1 Step 1: Is the Term in Question "Means-Plus-Function"?
5.2.3.5.2 Step 2: Interpretation of Means-Plus-Function Claim Terms
5.2.3.5.2.1 Step 2A: Identify Claim Term Function
5.2.3.5.2.2 Step 2B: Identify "Corresponding Structure, Material, or Acts"
5.2.3.5.2.3 Step 2C: "Equivalents Thereof"
5.2.3.5.2.4 Specific Rule for Means-Plus-Function Claims in the Computer Software Context
5.2.4 Dysfunctional Claims: Mistakes and Indefiniteness
5.2.4.1 Mistakes
5.2.4.2 Indefiniteness
5.3 Deference to Prior Claim Construction Rulings
5.3.1 Distinguishing Among Preclusion and Estoppel Doctrines
5.3.2 Issue Preclusion/Collateral Estoppel
5.3.2.1 Identity of Issues
5.3.2.2 Actual Litigation
5.3.2.3 Full and Fair Opportunity to Litigate
5.3.2.4 Determination Was Essential to the Final Judgment
5.3.2.4.1 Finality
5.3.2.4.2 Essential to the Final Judgment

5.3.2.5 Reasoned Deference as a Prudent Approach to Issue Preclusion
5.3.3 Judicial Estoppel
5.3.4 Stare Decisis
5.4 Practical Tips for Claim Construction
5.4.1 Recognizing and Avoiding the Pitfalls of Sound Bite and "Cite" bite Advocacy
5.4.1.1 "Heavy Presumption of Ordinary Meaning" No Longer Applies
5.4.1.2 "Presumption in Favor of Dictionary Definition" No Longer Applies
5.4.1.3 "Explicit Definition," "Disavowal," or "Disclaimer": Ordinary Meaning versus Prosecution Disclaimer
5.4.1.4 Reliance on Extrinsic Evidence Is Permissible but Cannot Override Intrinsic Evidence
5.4.2 Checklist/Discussion Points for Claim Construction Hearing

The construction of patent claims plays a critical role in nearly every patent case. It is central to evaluation of infringement and validity, and can affect or determine the outcome of other significant issues such as unenforceability, enablement, and remedies. The process by which courts interepret patent claims represents one of the most distinctive aspects of patent litigation. This chapter explores the procedural and substantive aspects of claim construction.

It will be useful to have some historical and jurisprudential context for claim construction in place before delving into the details. With the growing resort to the use of juries in patent cases since 1980, the issue emerged of whether the judge or the jury should construe the terms of patent claims. Until 1996, it was common in jury trials for courts to include claim construction as part of the jury's charge. Resolving the scope of patent claims in this manner, however, significantly increased the complexity and uncertainty of trials. The question of who should have responsibility to determine the meaning of patent claims came before the Supreme Court in the seminal case of *Markman v. Westview Instruments*, 517 U.S. 370 (1996), resulting in the term *Markman* hearing.

In *Markman*, Markman sued Westview Instruments for infringement of its patent on a system for tracking articles of clothing in a dry-cleaning operation. After a jury found infringement, Westview Instruments moved for judgment as a matter of law on the ground that the patent and its prosecution history made clear that the patent claims at issue did not extend to the defendant's accused device. The trial court granted the motion based on its examination of the relevant documentation. On appeal, the patentee asserted that the trial court's judgment violated its Seventh Amendment right to a jury trial on claim construction. Markman called attention to the fact that it had introduced expert testimony on the issue. Based largely on functional considerations, the Supreme Court held that claim construction is a matter for the court and hence beyond the province of the jury. The Court emphasized that judges are better equipped than juries to construe the meaning of patent claim terms given their training and experience interpreting written instruments (such as contracts and statutes). And even though cases may arise in which the credibility of competing experts affects the determination of claim meaning, "in the main" the Court anticipated that claim construction

determinations will be "subsumed within the necessarily sophisticated analysis of the whole document, required by the standard construction rule that a term can be defined only in a way that comports with the instrument as a whole." *Id.* at 389. The Court also emphasized that judges are better able to promote uniformity and certainty in claim construction. The Court specifically noted that treating claim construction as a "purely legal" issue would serve stare decisis principles as courts are better situated to give due weight to decisions of other courts that have previously ruled on the same issues.

Although resolving an important issue for patent litigation, *Markman* spawned a complex set of procedural and substantive questions regarding when and how patent claims should be construed. This chapter begins with the procedural matters relating to claim construction and then presents the framework and substantive rules governing claim interpretation.

5.1 Timing and Procedure

In the decade since *Markman*, courts have experimented with different approaches to the claim construction process. This section presents and discusses the main lessons learned for:

- determining when to hold the *Markman* hearing;
- streamlining the pre-*Markman* process;
- the use of tutorials, experts, and advisors in claim construction;
- conducting a *Markman* hearing efficiently and effectively;
- rendering a *Markman* ruling; and
- integrating the *Markman* ruling into trial.

We identify issues that commonly arise in the claim construction process (from the commencement of the case through trial), explain the pros and cons associated with the different approaches to handling these matters, characterize best practices, and suggest tools to address specific situations.

5.1.1 Timing of *Markman* Hearings

Perhaps the most important case-management decision relating to the *Markman* process is its timing. More than a decade of practice has taught important lessons on when to hold the *Markman* hearing and has shown the need for flexibility to accommodate the needs of different cases.

Early *Markman* hearings (i.e., within about five months of the case-management conference) may be appropriate in some contexts. In cases that appear to present a well-crystallized question of claim construction that may resolve liability without the need for extensive discovery, an early *Markman* hearing may be advantageous. Providing parties with an early ruling on key claim construction

issues can promote settlement and avoid the cost and burden of lengthy discovery. However, in practice, these advantages are often outweighed by several disadvantages. Knowing what issues to present at a *Markman* hearing frequently requires extensive discovery into the nature of the accused device and of the prior art. Thus, an early *Markman* ruling often will need revisiting when new issues emerge.

In practice, the dominant and recommended approach is to hold *Markman* hearings midway through, or toward the end, of fact discovery, prior to expert discovery. This affords the advantage of allowing sufficient discovery in advance of claim construction proceedings to more fully identify the issues that need to be resolved. Such mid-phase *Markman* hearings allow a more focused expert discovery process (assuming that the *Markman* ruling is issued in advance). This approach avoids the need for having expert witnesses prepare reports that address, in the alternative, the different possible outcomes of the claim construction hearing, or worse, of having to redo expert discovery following a *Markman* decision.

Some courts have deferred *Markman* hearings until completion of expert discovery and resolve the disputes in conjunction with summary judgment briefing or immediately before trial. Although there may be some advantages to holding a *Markman* hearing at or near the end of a case (such as framing claim construction disputes in the context of dispositive motions), in practice this approach has been found to have too many drawbacks. Holding a late-phase *Markman* hearing may deprive litigants of enough time to settle the case before trial. Late-phase *Markman* rulings are likely to upset the experts' positions and may inject new issues into the case, especially where the court arrives at its own construction that does not squarely adopt what either of the parties proposed. *See Magarl, L.L.C. v. Crane Co.*, 2004 U.S. Dist. LEXIS 24283, *44 (S.D. Ind. 2004) (encouraging holding *Markman* hearings in advance of summary judgment briefing, because a "claim construction which precedes summary judgment could avoid unnecessary alternative briefing and evidentiary submissions, including expert witness testimony addressed to or based on rejected claim constructions.").

5.1.2 Pre-*Markman* Procedures

In order to promote efficient and effective *Markman* hearings, courts will want to address the procedures and ground rules for such proceedings at a relatively early stage in case management. As discussed in Chapter 2, Patent Local Rules place particular emphasis on timely and orderly identification of disputed claim terms. We begin this section with further discussion of best practices to bring those disputes and the parties' arguments to the surface prior to the *Markman* hearing. Depending on the complexity of the technology at issue, it is often useful to plan for technology tutorials in conjunction with the *Markman* proceeding. We discuss several practical issues relating to the timing, form, and conduct

of such tutorials and the use of court-appointed experts to assist in claim construction.

5.1.2.1 Mandatory Disclosure of Positions

The primary goals of the procedures before a *Markman* hearing are to: (1) ensure that the parties' claim construction positions are squarely joined, reducing false and hidden disputes; and (2) resolve any disputes about how the *Markman* hearing should be conducted so the hearing itself is efficient, helpful to the court, and without procedural disarray.

The following steps have proven especially effective in accomplishing these objectives.

5.1.2.1.1 Early Disclosure of Infringement and Invalidity Contentions

Requiring disclosure of infringement contentions at the start of the case is a proven way to focus at least some of the disputes at issue for the *Markman* hearing. Early disclosure of infringement contentions is a feature of the Patent Local Rules discussed in Chapter 2. *See* Appendix D (listing jurisdictions with Patent Local Rules). In jurisdictions that have not adopted Patent Local Rules, courts are free to build these disclosure requirements into their scheduling orders. These infringement contentions require the patentee to specify, among other things, each claim of each patent in suit that is allegedly infringed; each instrumentality that allegedly infringes each asserted claim; and a claim chart detailing where each element of an asserted claim is found in each accused instrumentality. *See, e.g.,* Northern District of California Patent Local Rule 3-1; Eastern District of Texas Patent Rule 3-1.

With its infringement contentions, the party must produce, among other things, all documents evidencing the conception and reduction to practice of each asserted claim, along with documents sufficient to show the disclosure of the claimed inventions to others prior to filing of the patent application. Similarly, the court can help focus *Markman* issues by requiring the alleged infringer to disclose invalidity contentions after receipt of the infringement contentions. This requires the alleged infringer to specify, among other things, the identity of each item of prior art that allegedly anticipates each asserted claim or renders it obvious, and any grounds for invalidity due to indefiniteness, enablement, or written description. *See* § 112. With its invalidity contentions, the accused infringer must produce all prior art not already of record, as well as documents sufficient to show the operation of the accused devices.

These disclosures force parties to crystallize their theories early in the case, and thereby to identify the matters that need to be resolved through the *Markman*

hearing. They also help streamline discovery by mandating the disclosures that are core to patent cases, thus reducing the need for interrogatories, document requests, and contention depositions. Early infringement contentions can, however, lead to more discovery because they may occur before parties fully understand their own positions.

5.1.2.1.2 Disclosure of Claims to Construe and Proposed Constructions

A widespread problem in patent cases is that the parties' *Markman* briefing may not effectively join the issues to be litigated at the *Markman* hearing, or may not confront claim construction issues that will ultimately be litigated at trial. To avoid this problem, it is advisable that the court set a meet-and-confer schedule in its scheduling order to require parties to identify terms that need construction. These procedures help to ensure that the issues for the *Markman* hearing be specified in advance of the briefing cycle, as opposed to having issues disclosed for the first time in briefing. Ordering a meet-and-confer process also helps to ensure that the parties' briefing is not wastefully directed to false or merely hypothetical disputes. Ordering parties to disclose their claim construction positions also discourages "hidden" disputes that may otherwise arise at trial. This structured meet-and-confer process is part of the Patent Local Rules of the Northern District of California, the Eastern District of Texas, and growing number of district courts, and is required within ten days of service of the invalidity contentions. *See* Northern District of California Patent Local Rules 4-1 to 4-3; Eastern District of Texas Patent Rules 4-1 to 4-3.

As part of this process, the court's scheduling order should set a date for the parties to exchange proposed constructions of the identified terms. Setting this date approximately twenty days after exchanging lists of terms is appropriate. As part of this disclosure, some jurisdictions also require that the parties disclose their supporting evidence, including whether they will be relying on expert witnesses.

5.1.2.1.3 Mechanisms for Limiting the Number of Claims Terms to Construe

Cases commonly involve multiple patents, dozens or even hundreds of claims, and multitudes of claim terms that may need construction. If left unmanaged, the sheer complexity of this tangle of terms can overwhelm the merits of a lawsuit. Courts should exercise their inherent case-management authority to limit the number of claims and claim terms at issue, as appropriate.

At the *Markman* phase, courts have wide discretion to limit the number of claim terms at issue. Restricting the scope of the *Markman* hearing may have the benefit of focusing the court's attention on the key issues (which may dispose of

the case), and of allowing a more prompt and well-reasoned ruling on the central matters in the case. Courts have experimented widely with various approaches to managing the scope of *Markman* hearings. By contrast, asking the parties to brief all the potential claim construction disputes invites false or inconsequential disputes, particularly because parties reflexively seek to avoid the risk of a waiver finding if they refrain from raising peripheral disputes.

The Northern District of California has recently adopted local rules limiting to ten the number of claim terms that will be construed in the *Markman* proceeding. The ten-term limit is a default rule that can be adjusted upwards or downwards depending on the circumstances of the case. The number should vary depending on the number of patents in dispute. Ten can be high for single patent cases, but low for multi-patent cases. The parties are required to meet and confer to identify the ten most significant terms in dispute. In addition to any terms that the parties mutually agree upon as being the most significant, the parties are each allocated half of the remaining terms of the ten, and can identify additional terms they wish to have construed under this allocation. This is not a fixed limit altogether of the number of terms to be construed, and litigants may seek to construe terms at later phases in the case. However, for purposes of the main *Markman* hearing, this channeling of the most significant terms allows courts to deploy their resources most efficiently to resolve the key disputes in the case.

There are many factors that may influence whether to increase the number of terms to be construed. For example, means-plus-function claims, *see* § 112, ¶ 6, generally must be construed in order to identify the corresponding structure in the specification. Also, allowing each party to have a fixed number of claim terms to be construed may not make sense. In many cases, a plaintiff will assert dozens of patent claims, often out of multiple patents, and may not want to construe any of the terms, seeking to leave their interpretation to the jury. Typically, the defendant is the party with a greater interest in having claims construed, and it may be prejudicial to the defendant to limit its ability to only have ten claim terms construed (particularly where the plaintiff has asserted a large number of claims). Thus, a rigid, formulaic approach will not accommodate all cases, and the parties should be allowed, where appropriate, to structure the *Markman* proceedings in a flexible manner to suit the unique aspects of the case.

Other mechanisms for managing the scope of *Markman* proceedings include page limits on briefing, and time restrictions at the *Markman* hearing. Parties will naturally allocate limited presentation times (written or oral) to the key disputes, and limits on briefing or oral argument will have some effect at streamlining the *Markman* proceedings. However, when parties feel that they could be faced with a waiver situation if all disputed terms are not addressed at the *Markman* proceedings, there will inherently be a tendency to cram additional arguments into the written or oral presentations. Ultimately, this is a less helpful mechanism than lim-

iting the number of terms that the court will address in the main *Markman* proceeding.

Courts risk upsetting trial dates and may invite reversal if they overly constrain or defer the *Markman* process. Ultimately, all material claim construction disputes must be ruled upon by the court for cases that go to trial. *See O2 Micro Int'l Ltd. v. Beyond Innovation Tech. Co., Ltd.*, 521 F.3d 1351, 1360-61 (Fed. Cir. 2008). It is legal error for the court to allow the parties to argue competing claim construction positions to the jury. *See CytoLogix Corp. v. Ventana Med. Sys., Inc.*, 424 F.3d 1168, 1172 (Fed. Cir. 2005) ("[B]y agreement the parties also presented expert witnesses who testified before the jury regarding claim construction, and counsel argued conflicting claim constructions to the jury. This was improper, and the district court should have refused to allow such testimony despite the agreement of the parties."). The more that outstanding claim construction issues are deferred until the late phases of litigation, or are not resolved until trial, the greater the likelihood of legal error and that trial will be a game of surprise. Resolving the material claim construction disputes well in advance of trial will prevent procedural aberrations from overwhelming the merits of a case and minimize the risk of reversal and the need for retrial.

5.1.2.1.3.1 Severance Versus Postponement

Courts faced with a case involving many patents, frequently with diverse technologies, have struggled to find ways to reduce the case to a manageable size that the court and a jury can handle in one trial. Often the court is able to persuade the parties to reduce the number of patents to be tried to a manageable number, but if that is unsuccessful, it is clear that the court does not have the power to order a party not to pursue a patent claim it has lawfully filed. District courts typically have addressed this issue in the context of multi-patent disputes in one of two ways: (1) limiting the total number of disputed terms to be construed, and hoping that those terms will resolve the dispute; or (2) allowing the parties to select a limited subset of patents to be tried in the first instance, and severing the remaining patents for a subsequent trial if needed. The primary risk in the first approach is that the chosen terms will not resolve the dispute, in which case the court will be faced with two unattractive options: either doing claim construction hurriedly at the end of the pretrial schedule, which disrupts expert reports, summary judgment, and other pretrial scheduling, or postponing the trial for another round of claim construction. The Federal Circuit has made clear that the district court may not proceed to trial without resolving any remaining claim construction disputes. *See O2 Micro Int'l,* 521 F.3d at 1360-63. In general, courts have gravitated toward the severance and stay option, and have found that the subsequent trials are not needed.

5.1.2.1.4 Recommended Approach: Mandatory Disclosure of Impact of Proposed Constructions

One technique that is not currently used, but should be a useful case-management tool, is to require parties to state the intended impact of their proposed constructions on the merits of the case. This approach is introduced in Chapter 2, regarding early case management, and flows from the fact that many infringement and invalidity disputes hinge on legal questions of claim interpretation and can be properly resolved on summary judgment. It is recommended that courts more formally integrate the summary judgment process with claim construction by providing an established framework for parties to specify how claim construction rulings would impact summary judgment. This approach would promote a dual-track summary judgment process, whereby claim-construction-driven motions are resolved in connection with the *Markman* process, and remaining motions are resolved at a separate stage in the case.

It is recommended that parties state the reasons for seeking construction of any terms that are litigated in the *Markman* process, regardless of whether they are being asserted for summary judgment purposes. This approach would not only give courts the context for making important rulings in the *Markman* process, but should also be a useful tool for minimizing unnecessary disputes. In practice, parties are often unable to articulate why their definition is materially different from their opponent's, but may nonetheless adhere to it. Left unresolved, these less than meaningful discrepancies in wording may result in wasteful briefing and unnecessary consumption of the court's time. Requiring disclosure of *why* these terms need to be construed should reduce false disputes. Where there is not a meaningful dispute underlying a party's request for a construction, courts may be well within their authority to decline construing that term. *See Vivid Techs., Inc. v. Am. Sci. & Eng'g, Inc.*, 200 F.3d 795, 803 (Fed. Cir. 1999) ("AS&E is correct that although the claims are construed objectively and without reference to the accused device, only those terms need be construed that are in controversy, and only to the extent necessary to resolve the controversy.").

Terms that are to be construed for summary judgment purposes should be specifically identified, along with a statement of which party (or both) would be seeking summary judgment on the basis of that term, and why. As an example of the form of disclosure recommended, Table 5.1 illustrates a sample claim chart showing a term to be construed ("steering wheel"), along with the defendant's reasons for seeking summary judgment.

Table 5.1
Summary Judgment Term: "steering wheel"

	Plaintiff	**Defendant**
Proposed construction	any device for directing a vehicle	a circular device for directing a vehicle
Summary Judgment Context (noninfringement)		Accused device lacks a circular steering device, so summary judgment of no infringement is proper.
Summary Judgment Context (invalidity)		If plaintiff's proposed construction prevails, then ABC reference anticipates the claims as a matter of law.

Many claim terms will not be the focus of summary judgment motions, but are the focus of claims or defenses that will be presented at trial. There may also be collateral reasons for parties to seek construction of terms, such as ensuring that a defendant's future products will be safely outside the scope of an asserted patent. It is recommended that the court also require the parties to disclose why they are seeking constructions of these other terms.

It is recommended that the court hold a short telephone conference with the parties after they file the list of terms to be construed and the reasons for their submission, prior to the briefing cycle. During this call, the court can state which summary judgment motions it is willing to entertain in connection with the *Markman* proceedings. Moreover, forcing the parties to explain why they need to have terms construed would go a long way towards eliminating unnecessary disputes. Minor disputes over wording choices can also be resolved in this manner.

This process would formally integrate the summary judgment process along with *Markman*. The court may wish to schedule summary judgment briefing in tandem with claim construction briefing, or may wish to stagger summary judgment briefing to take place shortly after the *Markman* hearing.

An open question is whether the courts could penalize a party for failing to take advantage of opportunities to bring summary judgment in connection with the *Markman* process. We expect that parties would take advantage of a formalized summary judgment process in connection with *Markman*, and they should be encouraged to do so. However, there are many reasons why parties may legitimately want to defer filing a summary judgment motion until later in the case, even where a claim construction question is at the heart of the dispute. It may be difficult to craft a summary judgment position until the claim construction ruling issues. Also, it is frequently desirable to close out fact discovery before filing sum-

mary judgment motions to preclude unforeseen facts from being "lobbed in" to defeat a summary judgment motion. Courts should address with care any efforts to penalize a party that does not file an early summary judgment motion in connection with the *Markman* process.

5.1.2.2 Educating the Court About Underlying Science and Technology

As discussed later in this chapter, *see* §§ 5.2.1, 5.2.3.2.1, claim terms must be interpreted from the perspective of a person having ordinary skill in the art as of the time the invention was made. Thus, the parties will need to educate the court about the science, technology, and perspective of a person having ordinary skill in the art as of the time period of the invention. The most common vehicle for accomplishing this task is the use of technology tutorials typically done in connection with a *Markman* hearing. In addition, courts occasionally go a significant step further and appoint a technical advisor, special master, or expert for the court. Table 5.2 summarizes the principal characteristics of these educational aids.

Table 5.2
Educating the Court and Court-Appointed Experts

Nature of Expert/Legal Authority	Process/Role	Procedural Safeguards
1. Tutorial Process	• presented by counsel, experts for each side, or agreed expert • demonstratives often useful (e.g., PowerPoint presentation, simulation video, CD that can be reviewed later)	• typically scheduled within two weeks of *Markman* hearing • usually best to allow each side to make their own presentation, with court actively questioning • advance disclosure (at least 48 hours) of demonstratives • often useful to videotape proceedings for later review

Table 5.2
Educating the Court and Court-Appointed Experts, *continued*

Nature of Expert/Legal Authority	Process/Role	Procedural Safeguards
2. Technical Advisor • pursuant to inherent powers • *TechSearch v. Intel,* 286 F.3d 1360 (Fed. Cir. 2002) (approved for use in *Markman*)	• "sounding board" and tutor who aids the court in understanding "jargon and theory" • not analogous to law clerk because advisor's superior technical knowledge can override judge's prerogative	• fair and open procedure for appointment; address allegations of bias, lack of qualifications • court must clearly define and limit duties in writing • guard against ex parte communications; advisor cannot contribute evidence or conduct independent investigation • make explicit (perhaps through a report or record) the nature and content of the advisor's tutelage concerning technology
3. Special Master • Fed. R. Civ. P. 53	• prepares report and recommendations (e.g., proposed claim construction) • court adopts, rejects, or modifies	• parties must be given opportunity to object • court may receive additional evidence • factual and legal issues decided de novo • procedural decisions reviewed for abuse of discretion
4. Expert witness • Fed. R. Evid. 706	• instructed by court in writing • provides findings to parties and court • court or any party may call expert as a witness	• court must allow parties to present views • may be deposed by any party

5.1.2.2.1 Technology Tutorials

Technology tutorials can be especially helpful in educating the court about the underlying technology. While tutorials will always be shaped by the issues the parties are litigating, the goal of the tutorial should be to give the court neutral, useful background information about the technology.

Cases vary widely on the need for technology tutorials. Some cases need little more than a brief introduction by the lawyers at the *Markman* hearing. Others may benefit from a lengthy, separate presentation with animations and live witnesses. A common practice is to schedule the technology tutorial within two weeks of the *Markman* hearing. It is often best to have the attorneys give the main presentations, with each side's technical expert in attendance for questioning. This approach recognizes that attorneys will generally be the most efficient at tailoring the background technology presentation to the issues the court will confront in *Markman* and throughout the remainder of the case. Having each side's expert in attendance allows the court to ask questions about the science, technical background, and technical terminology. Not all courts share this view, and some discourage attorneys from presenting the tutorial. *See* Standing Order for Patent Cases for Judge Armstrong (N.D. Cal.) ("The court prefers that someone other than counsel make the presentation."), available at <http://www.cand.uscourts.gov/cand/judges.nsf/f15a2e7269ab42de88256d48005fd21f/>. Several courts have successfully utilized what is referred to as the "hot tub" method, in which experts for each side engage in a dialogue, with the court moderating the discussion and probing to determine areas of agreement and disagreement.

The education process involving complex technologies can be improved through the use of video animations, which has the benefit of giving the court a tutorial that can be played at any time, including for newly-arrived law clerks. However, videos are a costly and time-consuming undertaking for the parties and may be less useful than allowing in-court presentations, with the opportunity for live questioning by the court. Some courts videotape in-court tutorials (or use a simple web-cam), to achieve the benefits of having a live presentation where the court's questions can be answered, and preserving a copy of the presentation for chambers' use (which captures more than a bare transcript might).

As discussed below, some courts appoint technical experts in patent cases. It is not recommended that the court use a court-appointed expert to deliver the tutorial. Preparing for these tutorials is a lengthy and expensive undertaking, typically with large investments in graphics and multimedia teaching tools. This function cannot be readily delegated to a court-appointed expert under a cost-sharing agreement by the parties, because the parties would never agree on what should be taught, or how the message should be conveyed. Moreover, allowing a court-appointed expert to present the tutorial would inject substantial uncertainty into the proceedings, and would leave the parties to try to present their own views of

the technology through cross-examination of the court-appointed expert (which Fed. R. Evid. 706 appears to allow), which would detract from the neutral presentation that these tutorials contemplate. It is better to allow each side to present their own view of the technology.

5.1.2.2.1.1 Anticipating the Need for an Appellate Record

It is important to bear in mind that the Federal Circuit faces comparable challenges as those encountered by the District Court in understanding the background technology in patent cases. The appellate court lacks the opportunity to hear from science and technology experts about the background of the technology. Therefore, it will be valuable to preserve valuable background information presented in a form that could useful during appellate review. Concise tutorial videos prepared by the parties can be particularly valuable. In addition, transcripts of hearings and Powerpoint slides (in notebook and digital format if animated) can assist the Federal Circuit in comprehending the background science and more fully understanding the basis for the District Court's claim construction.

5.1.2.2.2 Court-Appointed Experts

Due to the challenges of understanding the technical issues in particularly complex patent cases, some courts have turned to the appointment of experts. As reflected in Table 5.2, there are three options: (1) technical advisor; (2) special master; and (3) expert witness. These roles vary significantly.

5.1.2.2.2.1 Technical Advisor

One option that courts may consider for purposes of the *Markman* proceedings is to appoint a technical advisor. Given the demands of *Markman* proceedings to construe claims from the perspective of a person of ordinary skill in the art, there can be an appropriate role for technically skilled persons to assist the court, particularly in technologically complex cases. *See generally* John Shepard Wiley, Jr., *Taming Patent: Six Steps For Surviving Scary Patent Cases,* 50 UCLA L. Rev. 1413 (2002). Appointing a technical advisor for *Markman* proceedings has been expressly approved by the Federal Circuit in *TechSearch LLP v. Intel Corp.,* 286 F.3d 1360 (Fed. Cir. 2002), although the court emphasized the need to establish "safeguards to prevent the technical advisor from introducing new evidence and to assure that the technical advisor does not influence the district court's review of the factual disputes." *Id.* at 1377. Applying Ninth Circuit law, the Federal Circuit noted the following guidelines for appointing a technical advisor: use a fair and open procedure for appointing a neutral technical advisor addressing any allega-

tions of bias, partiality, or lack of qualifications; clearly define and limit the technical advisor's duties in a writing disclosed to all parties; guard against extra-record information; and make explicit, perhaps through a report or record, the nature and content of the technical advisor's tutelage concerning the technology. *Id.* at 1379 (citing *Ass'n of Mexican Am. Educators v. California*, 231 F.3d 572, 611 (9th Cir. 2000) (en banc)). The Federal Circuit cautioned, however, that "district courts should use this inherent authority sparingly and then only in exceptionally technically complicated cases." *Id.* at 1378. (We discuss this option with regard to trial case management in § 8.1.2.4.)

The proper role of the advisor is to be a sounding board or tutor who aids the judge's understanding of the technology. This includes explanation of the jargon used in the field, the underlying theory or science of the invention, or other technical aspects of the evidence being presented by the parties. The advisor can also assist the judge's analysis by helping think through critical technical problems. In this latter function, case law admonishes that the court must be careful to assure that the decision making is not delegated to the advisor.

A common concern with the appointment of a technical adviser is that the judge's role in applying the legal rules of claim construction may be surrendered to the technical expert, who could then have undue influence over the proceedings. Although in form the relationship between a judge and a technical advisor is much like the interaction between a judge and law clerk, the former relationship differs in that because of a judge's knowledge of law, a clerk cannot usurp the judicial role. Unlike the judge's law clerk, who may have undergraduate and possibly some graduate training in the relevant field and understands his or her role in assisting the judge through legal education and familiarity with the judicial system, a technical adviser will typically be a nationally or internationally known scientist or engineer with limited exposure to legal institutions. They are less likely to appreciate the nature of judicial decision making and the unique, constitutionally grounded authority of the court. Perhaps recognizing that parties often do not voluntarily raise these issues to the court, some judges are now including in their standard scheduling order a date for parties to submit agreed-upon names of technical advisors.

A related concern with the use of court-appointed advisors for claim construction is that they distance the judge from some of the most important decisions relating to the case. It is essential for the court to be fully engaged in the interpretation of claim language as these determinations often play a decisive role in the litigation, may require adjustment or further analysis later in the case, and affect the conduct of the trial (e.g., relevance of expert testimony, jury instructions, what arguments can be made to the jury). For this reason, some experienced patent jurists have disavowed use of advisors in claim construction and caution against their use.

A third concern relates to the transparency of the technical advisor process. The *TechSearch* decision emphasizes the need to guard against extra-record information and make explicit the nature and content of the technical advisor's tutelage concerning the technology. These principles run counter to using the technical advisor in the same manner as a law clerk, in which the court has informal, off-the-record communication with a member of his or her staff. A technical advisor is not a member of the court's staff. One solution to this concern would be to have all interactions between the judge and the technical advisor in open court with counsel present. Such a procedure, however, could make use of the technical advisor so inconvenient and costly as to render it infeasible. An alternative approach is to have all interactions between the court and the technical advisor transcribed, along with a record made of all correspondence, documents reviewed, and other materials considered by the technical advisor and discussed with the court. A third variation on this alternative, used by at least one court, is to have transcripts of interaction between the court and the technical advisor sealed and released to the parties only after the trial court proceedings have concluded. This approach has the advantage of enabling the court some flexibility in use of the technical advisor while assuring that the parties will have a full opportunity the review that interaction prior to potential appeal.

5.1.2.2.2.2 Special Master

Some courts, pursuant to Fed. R. Civ. P. 53, have delegated initial consideration of claim construction to a special master. Such special masters often have general legal training as well as experience with patent law specifically. They might also be familiar with the technical field in question. The special master will typically conduct a claim construction process, with briefing and argument. The special master will then prepare a formal report with recommendations regarding the construction of disputed claim terms. After the parties have had an opportunity to object to that report the court will often conduct a hearing at which the court may receive additional evidence and then adopt, reject, or modify the recommended claim constructions.

The use of a special master for the purpose of claim construction alleviates some of the due process concerns inherent in the use of a technical advisor. The special master does not engage in off-the-record communications with the court. On the other hand, the use of a special master runs an even greater risk of distancing the court from the details of claim construction. This limits the court's involvement in some of the most critical aspects of many patent cases and can create problems should claim construction require adjustment later in the case. It may limit the court's ability to gain command over the background science and technology, which could be important later in the case (for example, in addressing non-obviousness).

5.1.2.2.2.3 Expert Witness

A third option is the formal appointment of an expert pursuant to Fed. R. Evid. 706. This procedure is not usually appropriate for the *Markman* process. It is the court's responsibility to make the ultimate *Markman* determination (even if a special master is used). The parties have a significant stake in crafting their presentation of the issues, which is often related to the tutorial process. Furthermore, the process leading up to and the timing of *Markman* decisions caution against the use of a court-appointed expert witness. The list of disputed claim terms will evolve as the case moves to the *Markman* hearing. Selecting and instructing a court-appointed expert could complicate what is otherwise already an involved and rapidly evolving process. A court-appointed expert for the *Markman* hearing would also create significant redundancy since the parties will have their own experts to the extent such assistance is needed. The court can and should encourage the parties to identify a mutually agreeable expert to educate the court, although experience indicates that parties rarely agree on such a person.

5.1.3 Conduct of the *Markman* Hearing

As courts have experimented with *Markman* hearings, they have had to determine how such proceedings should be characterized and what rules apply.

5.1.3.1 The "Evidentiary" Nature of *Markman* Hearings

The "evidentiary" nature of *Markman* hearings is a concept in flux. *Markman* hearings are referred to as "evidentiary hearings." *See, e.g.*, *EMI Group N. Am., Inc. v. Intel Corp.*, 157 F.3d 887, 891-92 (Fed. Cir. 1998). Nonetheless, the Federal Circuit has ruled that claim construction is strictly a matter of law. *Cybor Corp. v. FAS Techs., Inc.*, 138 F.3d 1448 (1998) (en banc). This view, however, has increasingly been questioned. *See* § 5.2.2.2. A widely-held understanding has been that consideration of fact-intensive "extrinsic" evidence was generally taboo.[1] That line of authority (especially as articulated in *Vitronics Corp. v. Conceptronics, Inc.*, 90 F.3d 1576 (Fed. Cir. 1996)), has been repeatedly discredited and overruled by the Federal Circuit. *See, e.g.*, *AFG Indus., Inc. v. Cardinal IG Co., Inc.*, 239 F.3d 1239

1. "Intrinsic" evidence refers to the patent and its file history, including any reexaminations and reissues. Intrinsic evidence also includes related patents and their prosecution histories. In addition, the Federal Circuit generally treats as intrinsic evidence the prior art that is cited or incorporated by reference in the patent-in-suit and prosecution history. "Extrinsic evidence" refers to all other types of evidence, including inventor testimony, expert testimony, and documentary evidence of how the patentee and alleged infringer have used the claim terms. Dictionaries are considered to be "extrinsic" evidence. *Phillips v. AWH Corp.*, 415 F.3d 1303, 1318 (Fed. Cir. 2005) (en banc).

(Fed. Cir. 2001). In recent years the Federal Circuit has allowed consideration of extrinsic evidence, and *Phillips* should put to rest any doubt that extrinsic evidence is proper for consideration. *See Phillips v. AWH Corp.,* 415 F.3d 1303 (Fed. Cir. 2005) (en banc). Indeed, several members of the Federal Circuit believe that the time is ripe to reconsider *Cybor*'s rule of de novo review for claim construction. *See Amgen Inc. v. Hoechst Marion Roussel, Inc.*, 469 F.3d 1039, 1041 (Fed. Cir. 2006) (Chief Judge Michel, joined by Judge Rader, dissenting from denial rehearing en banc). Relying on extrinsic evidence (especially by considering the parties' expert submissions and making credibility determinations as to their respective merit) may be a way of bolstering the "factual" nature of *Markman* rulings and improving chances of deferential review on appeal. *See Ortho-McNeil Pharm., Inc. v. Caraco Pharm.,* 476 F.3d 1321 (Fed. Cir. 2007) (affirming construction based in part on expert testimony that claim term "about 1:5" means "approximately 1:5, encompassing a range of ratios no greater than 1:3.6 to 1:7.1"). Nonetheless, intrinsic evidence should ordinarily be the primary focus of claim construction determinations. *See* 415 F.3d at 1319; § 5.2.2.

5.1.3.2 Application of the Federal Rules of Evidence

A frequent and related question is whether, and to what extent, courts should apply the Federal Rules of Evidence in *Markman* proceedings. The dominant and recommended approach is to apply the Federal Rules of Evidence loosely, in part because *Markman* hearings are not heard by a jury. Furthermore, requiring available witnesses to appear live at a *Markman* hearing and discovery to overcome hearsay and other objections would significantly increase the cost and burden of conducting the hearing. Thus, absent particular concerns about the unreliability of certain forms of proffered evidence, we recommend taking a liberal approach to applying the Federal Rules of Evidence in *Markman* proceedings, such as allowing use of depositions instead of live testimony and declarations (as long as there has been an opportunity for cross-examination) and freer use of documents without a foundational witness as long as there is not a dispute about the authenticity of the document.

5.1.3.3 Safeguards on Extrinsic Evidence

The court should provide safeguards to ensure that extrinsic evidence is reliable. Allowing depositions of experts prior to a *Markman* hearing reduces this risk and may eliminate the need to call witnesses at the *Markman* hearing. If expert testimony occurs, parties should be permitted to cross-examine any witnesses and allow examination into any sources of documentary evidence that may be proffered. Courts need to scrutinize expert submissions and should actively question the opinions of experts. Typically, experts are highly paid consultants and there is

an inherent risk that their opinions will be biased and unreliable. Thus, while it may be extremely probative to hear from persons who are truly experts in the particular field of technology at issue, courts must actively guard against the risk of bias. Cross-examination will usually be a sufficient mechanism to expose bias and unreliability, and conversely, to confirm that an expert's opinions are sound. Courts may choose to apply a *Daubert* standard for qualifying expert witnesses to present expert opinions in a *Markman* hearing. Because *Markman* hearings are not heard by a jury, the need for applying *Daubert* is not as compelling as for a jury trial; however, it would be within the trial court's discretion to exclude any testimony of a witness whose proffered opinions lack the hallmarks of reliability and relevance mandated by *Daubert*.

5.1.3.4 Evidence of the Accused Device

Another common question is whether, and to what extent, the court should consider the accused device during the *Markman* hearing. In theory, the accused device should have no role in the *Markman* process because the claims should be construed based on the patent language and relevant supporting documentation. Older en banc authority from the Federal Circuit holds that the accused device should not be considered during claim construction. *See SRI Int'l v. Matsushita Elec. of Am.*, 775 F.2d 1107, 1118 (Fed. Cir. 1985) (en banc) ("It is only *after* the claims have been *construed without reference to the accused device* that the claims, as so construed, are applied to the accused device to determine infringement."). More recently, the Federal Circuit expressly approved consideration of the accused device during claim construction. *Wilson Sporting Goods Co. v. Hillerich & Bradsby Co.*, 442 F.3d 1322, 1327 (Fed. Cir. 2006); *Pall Corp. v. Hemasure Inc.*, 181 F.3d 1305, 1308 (Fed. Cir. 1999) ("Although the construction of the claim is independent of the device charged with infringement, it is convenient for the court to concentrate on those aspects of the claim whose relation to the accused device is in dispute."). As stressed by this more recent authority, it is often useful for trial courts to understand the context of the infringement dispute to know what it is that they are deciding when ruling on claim construction. Moreover, knowing the context of the infringement (or validity) dispute gives courts a better sense of whether they even need to construe a term, or if they can simply let the "plain meaning" of a term speak for itself. But the accused device has no relevance to how a person having ordinary skill in the art would interpret claim terms.

5.1.3.5 Evidence of the Prior Art

Relatedly, courts are free to consider the prior art when ruling on claim construction. Prior art may be directly relevant to claim construction, especially where the patent applicant's dialogue with the PTO concerning the prior art may have

given rise to a disclaimer. Also, statements in the patent specification about the prior art may be important evidence for construing claim terms. Even apart from prior art recited in the patent and the prosecution history, it is important for trial courts to have the context of other prior art that will form the basis of an invalidity defense. Those prior art references may play as large a role in shaping the claim construction dispute as does the accused device.

5.1.3.6 The Need to Focus *Markman* Proceedings on Claim Interpretation

There are limits on the extent to which the court should consider the accused device and prior art during *Markman* proceedings. The *Markman* case seeks to establish distinct roles for the court and for the jury.[2] It is the court's job to perform the legal task of interpreting the scope of the claim terms to the extent possible based upon the patent document from the perspective of a person having ordinary skill in the art. It is the role of the factfinder (typically the jury) to apply these construed terms to the accused device (to determine infringement) and to the prior art (to determine validity). If the court prejudges infringement or validity in its *Markman* ruling, then the court is subject to reversal for having usurped the role of the jury.[3] As we see below, these roles can become blurred in the context of non-technical claim terms and terms of degree. *See* §§ 5.2.3.1.5.1-2. Following the *Markman* ruling, the court is free to entertain summary judgment motions that turn on claim construction. As discussed further in Chapter 6, we recommend that courts schedule summary judgment motions that can be resolved on the basis of claim construction simultaneously with claim construction hearings. Nonetheless, it will be important for the court to avoid trenching upon the jury's role.

---

2. *See MacNeill Engin'g Co. v. Trisport, Ltd.*, 126 F. Supp. 2d 51, 54 n.1 (D. Mass. 2001) ("To open *Markman* hearings to detailed comparisons between the patented and allegedly infringing device creates the unacceptable risk of conflating claim construction (law teaching) with infringement (fact finding). Let's face it, when *Markman* hearings become miniature or full blown infringement trials, the actual *language* of the claim diminishes in importance relative to the *context* of the particular dispute, despite the Supreme Court's admonition that it was the judiciary's particular facility for construing *language* that warranted denoting claim construction as a legal, and hence judicial, function.").

3. *See PPG Indus. v. Guardian Indus. Corp.*, 156 F.3d 1351, 1355 (Fed. Cir. 1998) ("Claims are often drafted using terminology that is not as precise or specific as it might be . . . . That does not mean, however, that a court, under the rubric of claim construction, may give a claim whatever additional precision or specificity is necessary to facilitate a comparison between the claim and the accused product. Rather, after the court has defined the claim with whatever specificity and precision is warranted by the language of the claim and the evidence bearing on the proper construction, the task of determining whether the construed claim reads on the accused product is for the finder of fact.").

5.1.3.7 Sequence of Argument

Courts have broad discretion as to how they conduct *Markman* hearings. Some allocate multiple days to the hearing, while others determine claim construction on the papers.

When there is an oral hearing, it may be appropriate to hear from the lawyers on a term-by-term basis. Particularly when there are many terms at issue, hearing each side's positions for each term can help crystallize the dispute for each term. In other cases, it makes sense for each side to give its complete presentation. Allowing each party to do so may be a better way for appreciating the overall themes of a case. Hybrid approaches may work, as well, with the court hearing from each side on groups of terms.

It is highly recommended that courts allow the parties to make a visual presentation. Multimedia presentations, animations, and other visual aids can be highly instructive tools for teaching the technological concepts and claim construction principles that shape a dispute. They are also especially helpful in illustrating the particular issues in dispute. To the extent possible, the court should endeavor to preserve this record for appellate review.

Table 5.3 lists some questions that the court may want to ask of the parties during the course of the argument.

Table 5.3
Important Questions During *Markman* Hearing

Why do I need to construe this term?
How is your proposal different than your opponent's?
What is the source of ordinary meaning for this term?
Do I need to find an intentional disclaimer (if seeking narrowing construction)?
How is your extrinsic evidence anchored in the language of the patent?

5.1.4 The *Markman* Ruling

5.1.4.1 Interrelationship to Jury Instructions

The *Markman* ruling becomes the basis for the court's jury instructions. *See IPPV Enters., LLC v. Echostar Commc'ns Corp.*, 106 F. Supp. 2d 595, 601 (D. Del. 2000). Courts should draft their *Markman* rulings with an eye towards making the claim terms understandable to the jury when the time comes for instructions. In this regard, it is highly recommended that courts include a conclusion section at the end of their *Markman* orders setting forth the exact construction that will be used in the jury instructions. Any lack of clarity in this regard invites further disputes in the midst of trial during the drafting of jury instructions.

5.1.4.2 Basis for Appellate Review

The court should provide a detailed explanation for the basis for its ruling. Although the Federal Circuit currently reviews claim construction rulings de novo, it is more likely to defer to the trial court's interpretation to the extent that the ruling is detailed and is accompanied by a detailed record. Furthermore, even if the Federal Circuit reaches a different interpretation, a fuller record might provide the basis for an alternative disposition short of remand and a second trial.

The district court should also scrutinize factual stipulations that underlie summary judgment motions following or in combination with claim construction. The parties may enter into such stipulations so as to obtain finality of the district court proceedings and secure appellate review (such as the patentee stipulating to non-infringement after receiving a narrow claim construction). If the stipulation is devoid of context, or overly vague and ambiguous, the Federal Circuit may lack the context it needs to properly resolve the appeal, including making decisions on whether to remand the case. Accordingly, the district court should be vigilant to ensure that any such stipulations provide the necessary facts to justify the finality of the judgment below.

5.1.4.3 Not All Terms Require "Construction"

There is no requirement for a court to construe a claim term when there is no genuine dispute as to its meaning. The purposes of claim construction are to define the proper scope of the invention and to give meaning to claim language when the jury might otherwise misunderstand a claim term in the context of the patent and its file history. If a claim term is non-technical, is in plain English, and derives no special meaning from the patent and its prosecution history, then the court has no need to function as a thesaurus. *See* § 5.2.3.1. To do so could well encroach upon the factfinder's domain. The "ordinary" meaning of such terms should speak for itself, and the court should avoid merely paraphrasing claim language with less accurate terminology. *See, e.g.*, *U.S. Surgical Corp. v. Ethicon, Inc.*, 103 F.3d 1554, 1568 (Fed. Cir. 1997) ("Claim construction is a matter of resolution of disputed meanings and technical scope, to clarify and when necessary to explain what the patentee covered by the claims, for use in the determination of infringement. It is not an obligatory exercise in redundancy."). By contrast, the terms most appropriate for construction are technical terms for which the jury may not appreciate an "ordinary" meaning. It is the role of the court to use the *Markman* process to understand the "ordinary" meaning that persons of skill would give to the claim terms in the context of the patent, and to construe the term in view of that ordinary meaning in light of the intrinsic and non-contradictory extrinsic evidence.

5.1.4.4 The Court May Adopt Its Own Construction

The court is free to devise its own construction of claim terms rather than adopt a construction proposed by either of the parties. However, the consequence of issuing the court's own construction is that it may upset the foundations of the parties' expert reports and any pending motions before the court. This problem may be particularly acute in late-phase *Markman* hearings where the parties' expert reports may have already been rendered based on the particular wording of the parties' proposed constructions. In such circumstances, departing from the parties' proposed construction may throw a case off track by requiring new expert reports and redrafting of case dispositive motions.

5.1.4.5 Tentative Rulings Prior to the *Markman* Hearing

Many courts report success with issuing tentative rulings prior to the *Markman* hearing. The ability to follow this approach is naturally constrained by the resources of chambers to issue a tentative ruling in advance of the *Markman* hearing. It may also be infeasible where the invention involves complex science and technology. The court may understandably wish to hear from experts and see demonstrative exhibits before opining, even if only tentatively.

When the court is able to issue a tentative prehearing ruling, it has the benefit of informing the parties what issues are most important to the court, in order to most effectively channel the in-court presentations at the *Markman* hearing. This approach has the benefit of allowing the court to confirm its understanding of the record and the governing authorities in a direct dialogue with the attorneys. Issuing a tentative ruling prior to the hearing is a good way for the court to clear up any misperceptions that might otherwise result in reversible error. But given the lack of familiarity that the court may have with the science and technology at issue and the blurred fact/law aspects of claim construction, the court should view its tentative position with less conviction than might otherwise be the case in other areas of the law.

5.1.5 Amendments to Infringement and Invalidity Contentions

The court's *Markman* ruling may alter the landscape for a party's infringement or invalidity contentions. Accordingly, for those courts that employ Patent Local Rules, or provide for similar provisions in their scheduling orders, it is appropriate to allow limited amendments to a party's infringement or invalidity contentions to account for the *Markman* ruling or other events that may arise during discovery (such as newly discovered prior art, or newly discovered, non-public information about the accused devices). *See*, *e.g.*, Patent Local Rule 3-6 (N.D. Cal). Such amendments, however, should only be allowed on a showing of good cause.

Freely allowing such amendments would invite litigants to change the playing field late in the case and disrupt the orderly framework that the Patent Local Rules are designed to establish.

5.1.6 Interlocutory Appeal of *Markman* Rulings

Due to Federal Circuit practice, it has become widely accepted that *Markman* rulings cannot be appealed until there has been a final judgment of all claims and counterclaims. In the mid 1990s, various parties attempted to appeal *Markman* rulings prior to obtaining a final judgment on all claims and counterclaims at the district court level. Arguments in favor of such early appeals note that claim construction is a matter of law and that obtaining a definitive claim construction from the Federal Circuit could avoid the costs to all parties of trial on a multitude of issues that hinge on claim construction. Moreover, given the relatively high rate of reversal of claim construction rulings, trial rulings frequently need to be vacated when the claim construction is changed on appeal, even in part. Thus, parties frequently argue that early appeals of claim construction rulings should be allowed to avoid the expense of time and money (including the trial court's own resources) for resolving issues that may likely be disposed of when claim construction is determined on appeal.

Nonetheless, for more than a decade, the Federal Circuit denied all interlocutory appeal petitions following the *Markman* decision and generally discouraged the bringing of such appeals. One basis for the Federal Circuit's reluctance to accept early appeals of *Markman* rulings is that claim construction is frequently not finished until trial is complete. It is routine for additional *Markman* issues to arise during trial—either based on new claim construction issues, or the all-too-frequent exercise of "construing the construction," when the initial claim construction of a court does not squarely resolve the issues presented for trial. Furthermore, because claim construction is tied to so many issues in the case, the Federal Circuit is leery of giving an early ruling on claim construction while unaware of the other issues tied to it. And seeking Federal Circuit review of an interim ruling is disruptive of the underlying litigation because such appeals would be handled on the Federal Circuit's regular appeal schedule, without expedited relief.

In 2008, however, the Federal Circuit granted interlocutory appeal of a *Markman* ruling, *see Regents of the University of California v. Dakocytomation California, Inc.*, 517 F.3d 1363 (Fed. Cir. 2008), although the circumstances were somewhat unusual. More directly, the chief judge has publicly invited litigators to seek interlocutory appeals on claim construction. *See* Tony Dutra, *Chief Judge Issues Call to Action to Bring Cases for En Banc Federal Circuit Review,* BNA's Patent, Trademark & Copyright Journal, No. 191 (Oct. 2, 2008) ("Litigators . . . should be seeking interlocutory appeals on claim construction. For 15 years, litigators stopped the practice, but he noted that 'we got one this year and granted it.'").

While this does not appear to be signaling an invitation to review every (or even many) *Markman* rulings on an interlocutory basis, this case-management option may be appropriate in limited circumstances.

Procedurally, litigants have had the most success obtaining early appellate review when the *Markman* ruling renders the claims non-infringed. The parties may at that point stipulate to non-infringement, and ask the trial court to enter final judgment as to non-infringement under Fed. R. Civ. P. 54(b). On occasion, the Federal Circuit has granted review of partial judgments entered under Rule 54(b). *See, e.g.*, *Lava Trading, Inc. v. Sonic Trading Management, LLC*, 445 F.3d 1348, 1350 (Fed. Cir. 2006). However, because the issues of invalidity and unenforceability generally remain pending below, the Federal Circuit commonly will deny such review. *See, e.g.*, *Linear Technology Corp. v. Impala Linear Corp.*, 31 Fed. App'x 700 (Fed. Cir. 2002). At least one judge has remarked that allowing such piecemeal review of issues "portends chaos in process." *Lava Trading*, 445 F.3d at 1355 (Mayer, J., dissenting). Litigants seeking to invoke such review may maximize their chances by fully describing the basis for non-infringement so as to provide meaningful review of that ruling on appeal. *See id.* at 1350. Furthermore, to the extent the parties can arrange for dismissal of the remaining claims, that would also facilitate review (although such dismissal may be with prejudice). *See Nystrom v. Trex Co.*, 339 F.3d 1347, 1351 (Fed. Cir. 2003).

Another avenue for early appellate review is to obtain interlocutory review of interim orders pursuant to 28 U.S.C. § 1292(b), after having the district court certify its order as depending on a controlling question of law as to which there is substantial ground for difference of opinion and that an immediate appeal from the order may materially advance the ultimate termination of the litigation. The Federal Circuit granted such review in *Regents of Univ. of Cal. v. Dakocytomation California, Inc.*, 517 F.3d 1363 (Fed. Cir. 2008). The court noted its general disfavor of such interlocutory appeals, but explained that in this case, there was already a co-pending appeal of a denial of a preliminary injunction, and thus that it made sense to hear the interlocutory appeal in connection with the co-pending appeal. *Id.* at 1370.

5.1.7 Application of the *Markman* Ruling to Trial

As noted above, the central role of the *Markman* ruling at trial is to define the jury instructions. The *Markman* ruling establishes the claim limitations that must be met for the patent to be infringed and for the prior art to invalidate the patent. The *Markman* ruling also establishes the scope of the claims that must be enabled in order for the patent to be valid, and it defines the scope of art that must have been disclosed to the PTO during prosecution. Thus, the *Markman* ruling is critical to most of the substantive matters of patent law in the jury instructions. Having a clear, concise *Markman* ruling, which spells out the final constructions for

disputed claim terms, is essential to avoiding disputes at trial over the jury instructions. It is useful to place these constructions in a summary conclusion at the end of an opinion so that they can be readily adapted into jury instructions. It is essential that the instructions on claim construction come from the court and that the attorneys not be permitted to reargue claim construction positions inconsistent with the court's instructions, at the risk of a new trial being ordered or of reversal. *See CytoLogix Corp. v. Ventana Med. Sys., Inc.*, 424 F.3d 1168, 1172 (Fed. Cir. 2005) ("[B]y agreement the parties also presented expert witnesses who testified before the jury regarding claim construction, and counsel argued conflicting claim constructions to the jury. This was improper, and the district court should have refused to allow such testimony despite the agreement of the parties.").

Aside from the actual constructions adopted by the court, which are incorporated into jury instructions, the *Markman* opinion should not be shown to the jury. The *Markman* ruling will ordinarily include language rejecting the claim construction positions of one of the parties; conveying that information to the jury would be prejudicial to the party whose position was rejected. Giving the *Markman* ruling to the jury might also interfere in the jury's analysis of the infringement and invalidity arguments, particularly when (as is common) the *Markman* ruling contains a discussion of the accused device and the prior art.

There may be situations in which it is appropriate for portions of the *Markman* ruling to be shown at trial. For example, where the opinion of an expert witness is inconsistent with the claim construction standards ordered by the court, it may be appropriate in some cases to cross-examine the expert on his or her alleged misapplication of the claim construction ruling. In such circumstances, the court should be vigilant in restricting the portions of the ruling that may be shown at trial.

5.2 Analytic Framework and Substantive Principles

As mentioned at the outset of this chapter, the modern practice of claim construction derives from the seminal case of *Markman v. Westview Instruments,* 517 U.S. 370 (1996), which holds that the meaning of patent claims is a matter for the court, not the jury, to decide. Although providing some guidance on the approach for construing patent claims, the *Markman* decision spawned many issues relating to the proper framework for determining claim meaning. The Federal Circuit has issued hundreds of opinions since *Markman* addressing this subject. Its approach has shifted over the years and therefore it is critical for courts to ensure that that they are focused on the most current and authoritative decisions. The Federal Circuit's en banc decision in *Phillips v. AWH Corp.,* 415 F.3d 1303 (Fed. Cir. 2005), stands as the most authoritative synthesis of claim construction doctrine. But while putting to rest various controversies, many core tensions in claim construction persist. Moreover, the decision itself does not provide a step-by-step approach

to construing claims. Our goal in this section of the guide is to provide a systematic process for approaching the *Markman* determination.

This section begins by explaining the process of claim drafting so as to understand the genesis and evolution of claim terms. It then previews the sources for determining claim meaning and the general hierarchy set forth in *Phillips*. With this background in place, we then offer a structured analysis of claim construction. At the highest level of abstraction, claim construction entails analysis of several threshold questions regarding whether and when a claim term is interpreted and then working through the construal process. The court begins the process with an initial interpretation of the claim term in question based on its own reading. To the extent that the parties identify additional sources of guidance from the intrinsic evidence or extrinsic sources, the court must then systematically work through the various sources to reach a proper construction. There are several special cases as well: commonly interpreted terms, means-plus-function claim terms, and mistaken or indefinite claim terms. We also explore the appropriate deference to be accorded prior claim construction rulings. The section concludes by identifying some common claim construction pitfalls and a summary of key process and substantive issues.

5.2.1 Claim Drafting: The Genesis and Evolution of Claim Terms

Patent claim terms emerge through a process typically involving multiple contributors employing at least three distinctive vocabularies—plain English, scientific and/or technical jargon, and the conventions of claim drafting. The court is comfortable with the former but may need assistance interpreting terms that derive from the fields of science and claim drafting. Understanding the process of claim term drafting will assist that semantic challenge.

Chart 5.1 illustrates the drafters and lines of communication and collaboration leading to the ultimate words used in patent claims. The claim drafting process begins with the invention and inventor(s). Whether independent or employed in a corporate or university research and development unit, the inventor(s) will in most cases communicate their ideas to a trained patent attorney or agent. That person will typically have some familiarity with the field of invention (although not necessarily to the level of the inventor) as well as substantial training in the drafting of patent applications. Their job is to describe and claim the invention in terms that will satisfy the requirements of the Patent Act. They will seek to write the claims with sufficient specificity to clear the validity hurdles while providing the patentee with significant breadth to cover the foreseeable uses of the invention. As indicated by the two-headed arrow between the inventor and the patent prosecutor, there is often substantial back and forth between the inventor and the drafter before filing of the initial application. After that initial filing, however,

prosecution of the application and continuations may go on for years. There is often minimal or no interaction between the patent attorney and the inventors during this period, which causes a drift in nomenclature which can complicate claim construction. (This can lead to the anomalous and surprisingly common situation, many years later, in which a court can be called upon to construe a claim term that appears nowhere in the specification.) Whereas the inventor may be steeped in the language of his or her field, the patent drafter will be using terms from science as well as claim drafting to achieve a delicate balance of clarity, breadth, and flexibility.

Chart 5.1
Crafting of Patent Claim Terms

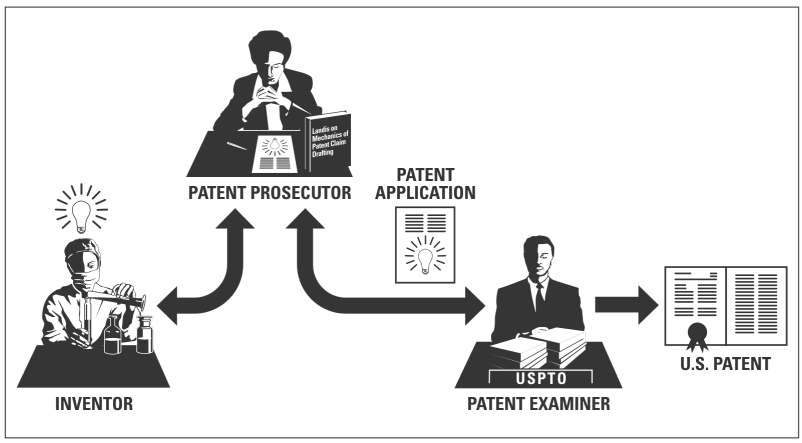

The process of claim drafting does not end when the patent application is submitted. The patent examiner will often play a role in the ultimate claim language of patents. Like the patent prosecutor, examiners have some knowledge of the technical field as well as experience in the process of claim drafting and evaluations. As with the process of application drafting, communication between the prosecutor and the examiner travels in both directions. Patent claims are frequently amended during the prosecution process based on the actions of the examiner. The examiner's focus is on determining that the claims are valid—(1) not anticipated, obvious, or indefinite; and (2) adequately described.

Thus, patent claim language can be an amalgam of multiple vocabularies and perspectives. The patent case law instructs courts to interpret patent claims from the perspective of a person having ordinary skill in the art (i.e., the scientist, technologist, or artisan in the relevant field of invention). This characterization, however, glosses over the role of the patent draftsperson and the examiner in actual claim drafting practice. Whereas some claim terms—such as "hydroxypropyl, methylcellulose"—undoubtedly derive their meaning from the pertinent technical

art, other terms—such as the transitional phrase "comprising"—are better understood from the perspective of the person having ordinary skill in *claim drafting*. Still other terms are simply being used in their plain English sense. Courts need to be sensitive to these distinctions in determining which terms require construction and how to interpret those terms.

5.2.2 Sources for Deriving Claim Meaning

As introduced earlier, *see* § 5.1.3.1, claim construction draws upon two general categories of evidence: intrinsic and extrinsic. Chart 5.2 summarizes the main components of these sources.

Chart 5.2
Sources of Evidence for Claim Construction

Intrinsic Evidence

- Patent
- Prosecution history
- Foreign and related patents (and their prosecution histories)
- Prior art that is cited or incorporated by reference in the patent-in-suit and prosecution history

Extrinsic Evidence

- Inventor testimony
- Expert testimony
- Other documentary evidence
  - dictionaries
  - treatises

Prior to the en banc *Phillips* decision, the Federal Circuit doctrine on whether extrinsic evidence could be considered and what role it should play shifted significantly. From 1996 until 2002, consideration of extrinsic evidence beyond educating the court about the technology was heavily disfavored. *See Vitronics Corp. v. Conceptonics, Inc.*, 90 F.3d 1576, 1583 (Fed. Cir. 1996) (finding it was "improper to rely on extrinsic evidence"). But nearly contemporaneous decisions cautioned against such a strong reading. *See, e.g., Key Pharms. v. Hercon Labs. Corp.*, 161 F.3d 709, 716 (Fed. Cir. 1998) (noting that *Vitronics* "might be misread by some members of the bar as restricting a trial court's ability to hear [extrinsic] evidence. We intend no such thing.") In 2002, the Federal Circuit appeared to elevate dictionaries, a special category of extrinsic evidence, to a central role in claim construction. *See Tex. Digital Sys., Inc. v. Telegenix, Inc.*, 308 F.3d 1193 (Fed. Cir.

2002). Within a short time, however, the limitations of this approach became apparent: "The main problem with elevating the dictionary to such prominence is that it focuses the inquiry on the abstract meaning of words rather than on the meaning of claim terms within the context of the patent. . . . [H]eavy reliance on the dictionary divorced from the intrinsic evidence risks transforming the meaning of the claim term to the artisan into the meaning of the term in the abstract, out of its particular context, which is the specification." *Phillips*, 415 F.3d at 1321.

Phillips shifted attention back toward the intrinsic record while recognizing that extrinsic evidence can be considered, although with healthy skepticism. Extrinsic evidence may be considered if the court deems it helpful "to educate [itself] regarding the field of invention . . . [and to] determine what a person of ordinary skill in the art would understand claim terms to mean." 415 F.3d at 1319. The court emphasized, however, that extrinsic evidence must be considered "in the context of the intrinsic evidence[,]" but is "less reliable than the patent and its prosecution history in determining how to read claim terms." *Id.* at 1318-19. Since *Phillips*, the law is clear that intrinsic evidence serves as the principal source for claim construction and that it trumps any extrinsic evidence that would contradict it.

5.2.2.1 Principal Source: Intrinsic Evidence

"Intrinsic" evidence refers to the patent and its file history, including any reexaminations and reissues. Intrinsic evidence also includes related patents and their prosecution histories. In addition, the Federal Circuit generally treats as intrinsic evidence the prior art that is cited or incorporated by reference in the patent-in-suit and prosecution history.

5.2.2.1.1 Prosecution History

Beyond the specification and other claims, an important source of evidence in claim construction is a patent's prosecution history. A "prosecution history" consists of "the complete record of the proceedings before the PTO and includes the prior art cited during the examination of the patent." *Phillips*, 415 F.3d at 1317. During those exchanges, the PTO will commonly reject the pending patent claims as unpatentable in light of prior art technologies. In response, the patent applicants will typically explain why their claimed inventions are patentable over what had come before. The Federal Circuit cautions that "because the prosecution history represents an ongoing negotiation between the PTO and the applicant, rather than the final product of that negotiation, it often lacks the clarity of the specification and thus is less useful for claim construction purposes." *Phillips*, 415 F.3d at 1317.

More specifically, the patentee may expressly limit the scope of its patent through disclaimers in order to avoid prior art. Courts must carefully evaluate such disclaimers during claim construction.

The communications between the applicant and the PTO may reveal the "ordinary meaning" of a claim term—i.e., the communications may show the meaning of a claim term in the context of the patent. *See Phillips*, 415 F.3d at 1317 ("Like the specification, the prosecution history provides evidence of how the PTO and the inventor understood the patent."). For example, in *Nystrom*, the prosecution history of the patent confirmed that the claim term "board" in the patent referred to wooden boards, and not plastic boards. *See Nystrom v. TREX Co., Inc.*, 424 F.3d 1136, 1145 (Fed. Cir. 2005).

5.2.2.1.2 Related and Foreign Applications

Some patents issue from single applications, with a single prosecution history. Other patents are members of large families of related patents, with a web of underlying patent applications, along with counterparts filed in foreign countries. In such instances, when one patent is in suit, parties may find statements in its related patents and patent applications, and in its foreign counterparts, that bear on claim construction. To what extent these statements in related filings impact the construction of the patent in suit is a common dispute in patent litigation.

Where there are a series of patent applications, with the patent in suit issuing from a later filed application, disputes frequently arise over the implications of statements made during prosecution of an earlier filed application (i.e., in a "parent" application). The statements in the parent application are most relevant where the earlier statements address common claim terms with the patent being construed. *Advanced Cardiovascular Sys., Inc. v. Medtronic, Inc.*, 265 F.3d 1294, 1305-06 (Fed. Cir. 2001). Moreover, where an amendment in a parent application "distinguishes prior art and thereby specifically disclaims a later (though differently worded) limitation in the continuation application," the prosecution disclaimer may apply. *Invitrogen Corp. v. Clontech Labs., Inc.*, 429 F.3d 1052, 1078 (Fed. Cir. 2005). The earlier disclaimer may continue to apply throughout a patent family, particularly if the applicants do not later inform the PTO that they want to rescind the earlier disclaimer. *See Hakim v. Cannon Avent Group, PLC*, 479 F.3d 1313, 1317 (Fed. Cir. 2007) ("Although a disclaimer made during prosecution can be rescinded, permitting recapture of the disclaimed scope, the prosecution history must be sufficiently clear to inform the examiner that the previous disclaimer, and the prior art that it was made to avoid, may need to be re-visited."). However, the general rule is that when different claim terms are present in the parent and descendant applications, the earlier statements have no bearing on claim construction. *See Ventana Med. Sys., Inc. v. Biogenex Labs., Inc.*, 473 F.3d 1173, 1182 (Fed. Cir. 2006) ("[T]he doctrine of prosecution disclaimer generally does not apply

when the claim term in the descendant patent uses different language."); *ResQNet.com, Inc. v. Lansa, Inc.*, 346 F.3d 1374, 1383 (Fed. Cir. 2003) ("Although a parent patent's prosecution history may inform the claim construction of its descendant, the [parent] patent's prosecution history is irrelevant to the meaning of this limitation because the two patents do not share the same claim language.").

Statements to foreign patent offices in counterpart filings may be relevant to construing a U.S. patent where the statements made to the foreign office demonstrate the ordinary meaning of a claim term. *See Glaxo Group Ltd. v. Ranbaxy Pharms., Inc.*, 262 F.3d 1333, 1337 (Fed. Cir. 2001) (noting that a statement in a related U.K. prosecution history "bolsters this reading" of the claimed "essentially free from crystalline material" limitation in the asserted U.S. patent); *see also Tanabe Seiyaku Co., Ltd. v. U.S. Int'l Trade Comm'n*, 109 F.3d 726, 733 (Fed. Cir. 1997) ("In the present case, the representations made to foreign patent offices are relevant to determine whether a person skilled in the art would consider butanone or other ketones to be interchangeable with acetone in Tanabe's claimed N-alkylation reaction."). However, because legal requirements for obtaining a patent in other countries may be unique to those countries, statements made to comply with those requirements are generally disregarded in interpreting a U.S. patent. *See Pfizer, Inc. v. Ranbaxy Labs., Ltd.*, 457 F.3d 1284, 1290 (Fed. Cir. 2006) ("[T]he statements made during prosecution of foreign counterparts to the [patent in suit] are irrelevant to claim construction because they were made in response to patentability requirements unique to Danish and European law.").

5.2.2.2 Extrinsic Evidence Permissible, But It May Not Contradict or Override Intrinsic Evidence

"Extrinsic evidence" refers to all other types of evidence, including inventor testimony, expert testimony, and documentary evidence of how the patentee and alleged infringer have used the claim terms. Dictionaries are considered to be "extrinsic" evidence. *Phillips v. AWH Corp.*, 415 F.3d 1303, 1318 (Fed. Cir. 2005) (en banc). *Phillips* reaffirmed that the intrinsic evidence is of paramount importance in construing patent claims. Nonetheless, extrinsic evidence can be useful, and *Phillips* confirms that district courts are free to consider extrinsic evidence, including expert testimony, dictionaries, treatises, and other such sources. Litigants continue to argue that it is improper to consider extrinsic evidence in *Markman* rulings, citing *Vitronics Corp. v. Conceptronics, Inc.*, 90 F.3d 1576 (Fed. Cir. 1996). However, the Federal Circuit long ago disavowed any such interpretation of *Vitronics*, and *Phillips* puts to rest any suggestion it is wrong to consider extrinsic evidence.

A key to relying on extrinsic evidence is recognizing its limitations. *Phillips* spells out five reasons why extrinsic evidence is inherently less reliable than the intrinsic evidence:

> First, extrinsic evidence by definition is not part of the patent and does not have the specification's virtue of being created at the time of patent prosecution for the purpose of explaining the patent's scope and meaning. Second, while claims are construed as they would be understood by a hypothetical person of skill in the art, extrinsic publications may not be written by or for skilled artisans and therefore may not reflect the understanding of a skilled artisan in the field of the patent. Third, extrinsic evidence consisting of expert reports and testimony is generated at the time of and for the purpose of litigation and thus can suffer from bias that is not present in intrinsic evidence. . . . Fourth, there is a virtually unbounded universe of potential extrinsic evidence of some marginal relevance that could be brought to bear on any claim construction question. . . . Finally, undue reliance on extrinsic evidence poses the risk that it will be used to change the meaning of claims in derogation of the "indisputable public records consisting of the claims, the specification and the prosecution history," thereby undermining the public notice function of patents.

Phillips, 415 F.3d at 1318-19. Thus, expert testimony must always be probed for bias, and courts should ensure that any expert whose opinion is offered be subject to cross examination. The chief risk of relying on dictionaries, treatises, and other outside documents is pertinence: There is often a gap between how such outside sources characterize a technology and the way it is presented and claimed in a patent.

Nonetheless, extrinsic evidence is an increasingly important source for claim construction. The Federal Circuit is moving away from the view that claim construction is purely a question of law, as was held in *Cybor Corp. v. FAS Techs., Inc.*, 138 F.3d 1448 (1998) (en banc). The court appears to be on the verge of recognizing, en banc, that claim construction may involve underlying questions of fact, particularly in regard to the assessment of extrinsic evidence. *See Amgen Inc. v. Hoechst Marion Roussel, Inc.*, 469 F.3d 1039, 1040-41 (Fed. Cir. 2006) (Michel, C.J., dissenting from denial of petition for rehearing en banc) ("I believe the time has come for us to re-examine *Cybor*'s no deference rule. I hope that we will do so at our next opportunity, and I expect we will."); *id.* (Newman, J., dissenting from denial of petition for rehearing en banc) ("And if the meaning is recognized as a case-specific finding of fact, appellate review warrants deference to the trier of fact, a deference here lacking."); *id.* (Rader, J., dissenting from denial of petition for rehearing en banc) ("I urge this court to accord deference to the factual components of the lower court's claim construction."); *id.* at 1045 (Gajarsa, Lynn, Dyk, concurring in denial of petition for rehearing en banc) (stating that reconsideration of *Cybor* may be appropriate in a case "in which the language of the claims, the written description, and the prosecution history on their face did not resolve the question of claim interpretation, and the district court found it necessary to resolve conflicting expert evidence to interpret particular claim terms in the field of the art"); *id.* at 1046 (Moore, J., dissenting from denial of petition for

rehearing en banc) ("I dissent because I believe this court should have taken this case en banc to reconsider its position on deference to district court claim construction articulated in *Cybor*.").

Thus, the Federal Circuit is likely to formally rule that there is a role for district court fact-finding in the claim construction process, especially with regard to assessing the credibility of competing expert witnesses. In the meantime, it appears that the Federal Circuit may be informally according such deference. *See Ortho-McNeil Pharm., Inc. v. Caraco Pharm.*, 476 F.3d 1321 (Fed. Cir. 2007) (affirming construction based in part on approval of expert testimony that claim term "about 1:5" means "approximately 1:5, encompassing a range of ratios no greater than 1:3.6 to 1:7.1"). Thus, reliance on extrinsic evidence can be an important way for trial courts to bolster the "factual" nature of their findings and promote deferential review on appeal. *See Phillips*, 415 F.3d at 1332 (Mayer, C.J., dissenting) ("In short, we are obligated by Rule 52(a) to review the factual findings of the district court that underlie the determination of claim construction for clear error."). What follow are some lessons from post- *Phillips* case law as to the appropriate, and inappropriate, roles for extrinsic evidence.

5.2.2.2.1 Illustrations of Reliance (and Non-Reliance) Upon Extrinsic Evidence

Where the specification supports two interpretations of a disputed claim, extrinsic evidence can be used to confirm which interpretation is more consistent with what a person having ordinary skill in the art would have understood at the time of invention. For example, in *Conoco Inc. v. Energy & Envtl. Int'l*, 460 F.3d 1349, 1362 (Fed. Cir. 2006), the question was whether a "stable" suspension of polymer required sufficient stability to remain suspended when stored for a long period of time, or just stability at the time the suspension was introduced into a pipeline. The court determined from the intrinsic evidence that the appropriate frame of reference was stability at the time the suspension was introduced into the pipeline. The court confirmed its interpretation against the extrinsic evidence, which indicates that all suspensions eventually separate, and found that the appropriate time frame for assessing stability is at the time the suspension is introduced into the pipeline.

Tap Pharm. Prods., Inc. v. Owl Pharms., L.L.C., 419 F.3d 1346 (Fed. Cir. 2005), is another example of extrinsic evidence being used to decide between two plausible interpretations from the specification. *Tap Pharmaceutical* concerned claims to a composition "comprising a copolymer . . . of lactic acid and . . . of glycolic acid." The question was whether the claims were limited to compositions resulting from a polymerization of lactic acid and glycolic acid, or whether the claims also covered the polymer resulting from cyclic precursors that transformed into lactic acid and glycolic acid during polymerization. The district court properly

relied on treatises that recognize that copolymers of lactic acid and glycolic acid can be made either by direct polymerization or by ring opening, and on expert testimony that a person of ordinary skill in the art would use the terms "lactic acid" and "glycolic acid" interchangeably with their cyclic analogs. *Id.* at 1349-50.

Attempts to use extrinsic evidence as the *source* for claim constructions are more problematic. Basing the meaning of claim terms on sources external to the patent raises concerns about the notice function of patents. Thus, when extrinsic evidence is used as the source of claim construction, special care must be taken to ensure that the extrinsic evidence is consistent with the patentee's own description of the invention. For example, an appropriate use of extrinsic evidence concerned claims to a "scanner," where the term "scanner" was not defined in the specification, which simply contained one illustrative embodiment having a moving scanner head. *Mass. Inst. of Tech. v. Abacus Software*, 462 F.3d 1344, 1351 (Fed. Cir. 2006). Faced with the question of whether a digital camera qualified as a "scanner," the court turned to dictionaries and concluded that a scanner required "movement between a scanning element and an object being scanned." *Id.* This definition was appropriate because it tracked what the patentee had disclosed in the specification as being a scanner. *Id.*

In a more tenuous example, the Federal Circuit approved the use of expert testimony to set numeric limits on a claim. The claim concerned a pharmaceutical composition with a ratio of "about 1:5" for two chemical components. *Ortho-McNeil Pharm., Inc. v. Caraco Pharm. Labs., Ltd.*, 476 F.3d 1321, 1326-28 (Fed. Cir. 2007). The court reviewed the intrinsic evidence, including claims directed to other ratios, and experimentation disclosed in the specification directed to a range of ratios, and credited the testimony of an expert who opined that "about 1:5" meant "a ratio up to and including 1:7.1 and a ratio down to and including 1:3.6." The Federal Circuit credited the expert testimony, which justified this range as appropriate in that it was not statistically different from the claimed ratio of 1:5. *Id.*

An example of expert testimony that strayed too far afield from the patent disclosures is in *Biagro W. Sales, Inc. v. Grow More, Inc.*, 423 F.3d 1296 (Fed. Cir. 2005), in which the proffering party sought to use expert testimony to reconceptualize the claims. *Biagro* concerned claims to a fertilizer "wherein said phosphorous-containing acid or salt thereof is present in an amount of about 30 to about 40 weight percent." *Id.* at 1302. The amount of phosphorus-containing acid actually present in the accused fertilizer product did not meet the levels stated in the claim, but the patentee tried to use expert testimony to argue that the amount of phosphorous-containing acid in the claim limitation should be read to refer to a "chemical equivalent amount," rather than the amount actually present. In support, the patentee cited fertilizer labeling guidelines and standards and expert declarations, asserting that phosphorus levels in fertilizer are measured by chemically equivalent amounts. This evidence was unpersuasive for the trial court and the

Federal Circuit, because Biagro could not tie its measurement approach to the patent's own description of the invention. *Id.* at 1303.

5.2.2.2.2 Conclusory Expert Opinions Should Be Disregarded

Expert opinions should be grounded both in the intrinsic evidence and by support in other independent, reliable sources. Where these criteria are lacking, the expert opinions should not be relied upon. For example, in *Network Commerce, Inc. v. Microsoft Corp.*, 422 F.3d 1353, 1361 (Fed. Cir. 2005), a patentee sought a construction based upon its expert declaration that a claimed "download component" need not contain a boot program. The expert declaration failed to explain why quoted passages from the specification supported his opinion, and failed to support the expert's conclusion with any reference to industry publications or other independent sources. Accordingly, the declaration was properly disregarded. *Id.*

5.2.3 Claim Construction: Two Stages of Analysis

With that background in place, we are ready to map out the overarching structure of claim construction. Chart 5.3 presents the two distinct steps. Litigants sometimes skip over the first inquiry—whether (and when) claim construction is necessary—and jump right into the complexities of claim construction. Many courts—through Patent Local Rules, *see, e.g.*, N.D. Cal. Patent Local Rules—or case management focus attention on the threshold issues. Before the court confronts the challenge of construing a claim term, it must consider a series of threshold doctrines and principles that determine whether construction is required (as well as the proper timing).

Chart 5.3
Claim Construction Flowchart

Step 1: Is Construction of a Claim Term Required?
Step 2: Interpretation of a Claim Term

5.2.3.1 Step 1: Is Construction of a Claim Required

Chart 5.4 presents the series of threshold issues that the court should consider in determining whether and when interpretation of a claim term is appropriate.

Chart 5.4
Step 1: Is Construction of a Claim Term Required?

A. Disputed Meaning that Can Be Derived from the Patent/PHOSITA ("person having ordinary skill in the art")
   1. Disputed Meaning: Is the meaning of the claim term the subject of legitimate disagreement? *See* § 5.1.4.3.
   2. Meaning Derivable from the Patent/PHOSITA: For non-technical terms, is there a special meaning that can be ascertained from the patent? *See* § 5.1.4.3.

B. Priority/Discretion/Timing: Courts have broad discretion to limit and phase claim construction.
   - Some courts limit first and usually final *Markman* proceedings to 10 terms
   - Court can revisit claim construction; it must eventually construe all legitimately disputed and construable terms before trial
   - Means + Function claims (in dispute) must be interpreted to identify corresponding structure, material, or acts. *See* § 5.2.3.5.

C. Issue Preclusion: Deference to Prior *Markman* Ruling
   - Issue preclusion cannot be applied offensively against a party not represented in prior proceeding; but it can be applied defensively if four-part test is satisfied. *See* § 5.3.
     - judicial estoppel can be applied where patentee changes positions
     - reasoned deference under stare decisis principles. *See* § 5.3.4.

D. Is the Term Amenable to Contruction? *See* Table 5.2, 5.2.3.1.5.

5.2.3.1.1 Is There a Genuine Dispute About the Claim Term?

There is no need to construe terms for the sake of construction. As detailed above, it is recommended that the court order a structured meet-and-confer process to narrow the number of claim terms requiring the court's resolution. Holding a brief telephone conference prior to claim construction briefing at which the par-

ties must articulate the basis for the dispute often narrows the number of terms further.

5.2.3.1.2 Would Claim Construction Help the Jury?

The point of claim construction is to instruct the jury on what the claim means from the perspective of a person having ordinary skill in the art. For many claim terms, attempting to "construe" the claim language adds little in the way of clarity. Where the perspective of a person having ordinary skill in the art would add nothing to the analysis, there may be no need to construe the terms. Non-technical terms (*e.g.*, "on" or "above" or "surround") and terms of degree (*e.g.*, "approximately" or "about" or "substantially") may not require construal by the court. Where "construing" a claim term would involve simply substituting a synonym for the claim term, it may be appropriate to allow the claim language to speak for itself.

Construction of a term is clearly appropriate in the case of technical terms, where a person having ordinary skill in the art would bring a distinctive perspective. Of course, in all cases, where the intrinsic and applicable extrinsic evidence provide further meaning to a term (such as disclaimers, descriptions of "the present invention," and claim differentiation), the court should account for such added evidence in the claim construction. But where the intrinsic evidence and extrinsic evidence do not meaningfully add to the definition of a term, it is appropriate (and often preferred) to allow straightforward claim language to stand as is.

5.2.3.1.3 Is Claim Construction a Priority?

Not all terms need to be construed in the initial *Markman* hearing. Courts increasingly focus the initial *Markman* hearing on no more than about 10 "priority" terms, with the expectation that resolving the key terms may dispose of the case. Courts are free to revisit any remaining disputes later in the case, but are required to construe all disputed claim terms before the case is submitted to the jury. How courts wish to balance the priorities of early decision making versus overall completeness will depend on the circumstances of the case.

5.2.3.1.4 Have the Claims Been Construed Before?

There may have been prior proceedings involving the same patents-in-suit or closely related patents. Where there has been a prior construction, the court needs to learn the context of the prior proceedings to determine the impact of doctrines of issue preclusion, claim preclusion, judicial estoppel, and stare decisis. Although the prior proceedings may not be binding in the present litigation, the court

should hear from parties to determine the factors that determine any preclusive effect or basis for according deference to the prior claim construction. These important considerations are discussed in § 5.3.

Similarly, in the increasingly common scenario where the patent-in-suit becomes the subject of patent reexamination proceedings, the district court may wish to stay claim construction until those collateral proceedings are resolved. The considerations are addressed in § 4.6.4.

5.2.3.1.5 Is the Term Amenable to Construction?

As illustrated in Table 5.2, claim terms can usefully be categorized into three potentially overlapping general types: (1) lay terms; (2) terms of degree; and (3) technical terms. As discussed previously, see § § 5.1.3.6, 5.1.4.3, not all terms in a claim require construction by the court. It can be improper to construe terms that do not have special meaning that can be derived from the patent.

Table 5.2
Typology of Claim Terms

Type	Lay Terms	Terms of Degree	Technical Terms
Examples	a, above, below, comprising, in, surround, to	approximately, essentially, substantial	hydroxypropyl, methylcellulose, cyclic redundancy, oligonucleotide
Amenability to Claim Construction	such terms are often understood by fact-finder; to construe arguably trenches upon jury's domain but such terms may have conventional/ established meaning in the technical field	such terms are often understood by jury; to construe arguably trenches upon jury's domain such terms are inherently contextual must be careful not to inappropriately import limitations from specification but must base interpretation on standard set forth in the specification: if no basis set forth therein, then no basis for construction	Must be interpreted if meaning is disputed; PHOSITA perspective is essential
Guide Section	§ 5.2.3.1.5.1	§ 5.2.3.1.5.2	§ 5.2.3.1.5.3

As reflected in Chart 5.5, the three types of claim terms are not mutually exclusive and the question of which category is most appropriate will not always be evident based solely on a reading of the claim. The court will need to examine the intrinsic record in making this assessment. Some plain English terms can have technical meanings in particular fields. For example, the word "inventory" can, depending upon on the context, be considered a lay term ("an itemized list of merchandise or supplies" or a "detailed list of all items in stock") as well as more specialized meaning in the fields of dry cleaning process inventions. *See Markman v. Westview Instruments, Inc.*, 52 F.3d 967 (Fed.Cir. 1995) (en banc) (interpreting "inventory" as used in patent claim to mean "articles of clothing" rather than cash or inventory receipts), *aff'd*, 517 U.S. 370 (1996).

Chart 5.5
Landscape of Claim Terms

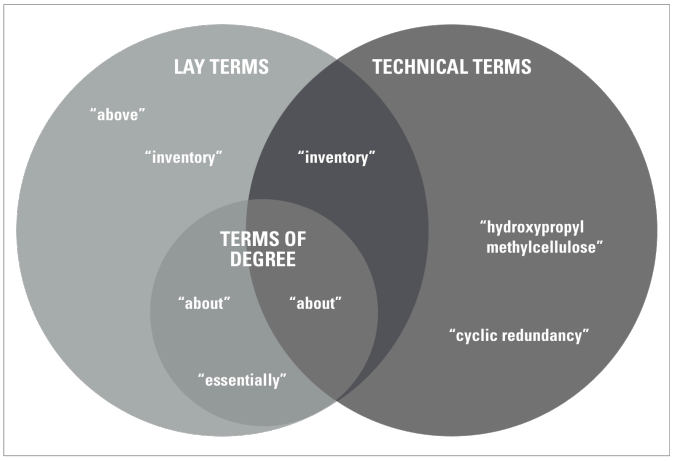

Some technical terms, such as "hydroxypropyl methylcellulose," may well be self-evident. Terms of degree, however, can be ambiguous. For example, the word "about" can obviously have a non-technical meaning. But when used in describing the scope of a particular invention, it may well take on meaning that is delimited by intrinsic, and possibly even extrinsic, evidence. *See Ortho-McNeil Pharm., Inc. v. Caraco Pharm. Labs., Ltd.*, 476 F.3d 1321, 1326-28 (Fed. Cir. 2007).

5.2.3.1.5.1 Lay Terms

Patent law has long struggled with how precisely claims should be construed. Many claim terms are inherently imprecise. These include terms of degree, such as "substantially," "about," and "approximately," which we deal with separately below because they have been the focus of substantial jurisprudence. District courts are commonly asked to give lay terms additional clarity in claim construction. When

imprecise language should be left to the jury remains a subtle, confounding, and thorny aspect of patent adjudication.

Efforts to construe lay terms with precision are in some tension with *Markman*'s division of authority between judges and juries. *See Markman*, 517 U.S. at 384. It is the court's role to construe the claims, while it is the jury's role to determine infringement. *Id.* That is, "Step 1" of the infringement analysis is to construe the claims, and "Step 2" is to compare the accused device against the construed claims. Construing terms of degree with more precise language may be error, not only because it "imports limitations" from the specification into the claims, but also because it can impinge on the role of the jury in resolving the question of infringement. The Federal Circuit has recently observed that "line-drawing" questions over what meets the scope of the claims is appropriately left to the jury in some contexts. *See Acumed LLC v. Stryker Corp.*, 483 F.3d 800, 806 (Fed. Cir. 2007) ("[A] sound claim construction need not always purge every shred of ambiguity. The resolution of some line-drawing problems—especially easy ones like this one—is properly left to the trier of fact.").

One the other hand, the Federal Circuit decision in *O2 Micro Int'l Ltd. v. Beyond Innovation Tech. Co., Ltd.*, 521 F.3d 1351 (Fed. Cir. 2008), dictates that although "district courts are not (and should not be) required to construe *every* limitation present in a patent's asserted claims," the court must interpret the scope of any claim term for which the parties have presented a "fundamental dispute." *Id.* at 1362. In that case, the district court had declined to construe the term "only if" on the ground that it has a well-understood meaning that is capable of application by the jury without judicial interpretation. The parties in the case agreed that "only if" had a common meaning, but the parties disputed the scope of the claim based on this phrase and argued that dispute to the jury. The Federal Circuit vacated the jury verdict and permanent injunction and remanded the case for reconsideration. In view of this decision, the prudent course for district courts will be to construe any claim term—including lay words or phrases—for which there is a legitimate dispute. Nonetheless, courts should be skeptical of construing lay terms for which neither party can produce intrinsic evidence indicating a specialized meaning.

5.2.3.1.5.2 Terms of Degree

Determining how far courts should go in construing lay terms arises with particular frequency in the context of terms of degree, such as "about," "approximately," and "essentially." The issues are whether such words are used in a technical sense or otherwise derive meaning from the specification.

5.2.3.1.5.2.1 The Court Should Not Delineate Terms of Degree "Where the Patent Provides No Standard"

When construing a term of degree, a key question is whether the intrinsic evidence provides some standard for measuring that degree. *Exxon Research and Eng'g Co. v. United States*, 265 F.3d 1371, 1381 (Fed. Cir. 2001) ("When a word of degree is used the district court must determine whether the patent's specification provides some standard for measuring that degree."). Often there may be no such standard, and the Federal Circuit has frequently ruled that it would be error to impose a more exact construction on terms of degree. *See, e.g*, *Playtex Prods., Inc. v. Procter & Gamble Co.*, 400 F.3d 901, 907 (Fed. Cir. 2005) ("But the definition of 'substantially flattened surfaces' adopted by the district court introduces a numerical tolerance to the flatness of the gripping area surfaces of the claimed applicator [which] contradicts the recent precedent of this court, interpreting such terms of degree.") *citing Cordis Corp. v. Medtronic AVE, Inc.,* 339 F.3d 1352, 1361 (Fed. Cir. 2003) (refusing to impose a precise numeric constraint on the term "substantially uniform thickness") and *Anchor Wall Sys. v. Rockwood Retaining Walls, Inc.*, 340 F.3d 1298, 1311 (Fed. Cir. 2003) (holding that "the phrase 'generally parallel' envisions some amount of deviation from exactly parallel," and that "words of approximation, such as 'generally' and 'substantially,' are descriptive terms commonly used in patent claims to avoid a strict numerical boundary to the specified parameter."). *See also PPG Indus. v. Guardian Indus. Corp.*, 156 F.3d 1351, 1355 (Fed. Cir. 1998) ("Claims are often drafted using terminology that is not as precise or specific as it might be. . . . That does not mean, however, that a court, under the rubric of claim construction, may give a claim whatever additional precision or specificity is necessary to facilitate a comparison between the claim and the accused product."); *Renishaw PLC v. Marposs Societa' per Azioni*, 158 F.3d 1243, 1249 (Fed. Cir. 1998) ("Thus, when a claim term is expressed in general descriptive words, we will not ordinarily limit the term to a numerical range that may appear in the written description or in other claims."); *Acumed LLC v. Stryker Corp.*, 483 F.3d 800, 806 (Fed. Cir. 2007) (rejecting argument that the district court's construction of "curved shank" to exclude "sharp corners or sharp angles" renders the construction insufficiently definite since the court did not specify precisely how "sharp" is too sharp.).

5.2.3.1.5.2.2 The Appropriate Standard for Defining or Declining to Define Terms of Degree

A standard for measuring a term of degree may come from the patent specification and the working examples. As noted above, a recent case concerns construction of the term "about 1:5," referring to a pharmaceutical composition hav-

ing a particular ratio of two components. *Ortho-McNeil Pharm., Inc. v. Caraco Pharm. Labs., Ltd.*, 476 F.3d 1321, 1326-28 (Fed. Cir. 2007). The Federal Circuit approved its construction as "a ratio up to and including 1:7.1 and a ratio down to and including 1:3.6." *Id.* at 1328. This construction was derived from the specification, which contained other examples of ratios that were tested and claimed, and from expert testimony, declaring that a range of 1:7.1 and a ratio down to and including 1:3.6 was not statistically different from the stated ratio of 1:5. This case may represent the high-water mark in terms of extrapolating examples from the specification and imposing numerical limits on claim scope, and may suggest a willingness (as discussed above) to credit district court fact-finding based on extrinsic evidence. By contrast, other cases have refused to assign numerical bounds to the scope of the claim term "about." *See Modine Mfg. Co. v. USITC,* 75 F.3d 1545, 1551 (Fed. Cir. 1996) ("It is usually incorrect to read numerical precision into a claim from which it is absent . . . it is a question of technologic fact whether the accused device meets a reasonable meaning of 'about' in the particular circumstances."), *overruled in part by Fresenius Med. Care Holdings, Inc. v. Baxter Int'l, Inc.*, 2006 U.S. Dist. LEXIS 36788 (N.D. Cal. May 24, 2006).

A standard for measuring a term of degree may come from the applicant's statements distinguishing the prior art. For example, in *Glaxo Group Ltd. v. Ranbaxy Pharms, Inc.*, 262 F.3d 1333, 1337 (Fed. Cir. 2001), the Federal Circuit found that the claim phrase "essentially free of crystalline material" could be properly construed as requiring a crystalline content of less then 10%, based in part on the applicant's statements describing the prior art. Similarly, in *Biotec Biologische Naturverpackungen GmbH & Co. KG v. Biocorp, Inc.*, 249 F.3d 1341, 1347 (Fed. Cir. 2001), the Federal Circuit approved construing the term "substantially water free" as having a water content below 5% in accordance with statements during prosecution history distinguishing a prior art reference having a water content from 5% to 30%.

Terms of degree frequently do not warrant a more precise construction, and it is often appropriate to pass imprecise terms to the jury in its role as fact-finder. However, the intrinsic evidence may suggest an appropriate standard for providing a more concrete measure of claim scope. The right approach is the one that recognizes the tension between the goals of clarifying claim scope and of avoiding imposing extra limitations on claim language, and then carefully assessing the objective measures that can be used to give standards for the claim terms.

5.2.3.1.5.3 Technical Terms

The easiest call for the court relates to technical terms. When these are disputed, there is no doubt that construction by the court is required. As reflected in Chart 5.5, however, some lay terms—such as "about"—might have a technical meaning in the context of the patent and hence will require interpretation by the

court. See *O2 Micro Int'l. Ltd. v. Beyond Innovation Tech. Co., Ltd.*, 521 F.3d 1351, 1362 (Fed. Cir. 2008) (failure to construe the term "only if" was error where parties disputed its scope).

5.2.3.2 Step 2: Interpretation of Claim Terms

Once it is determined that a term must be construed and is ripe for construal, the court must delve into the complex jurisprudence interpreting and applying the *Markman* decision. Before discussing the disputes that commonly arise in claim construction, it will be useful to state the principles that are generally *not* in dispute. The *Phillips* en banc decision distills these principles and lays out the basic framework for construing patent claims.

A "bedrock principle" of patent law is that "the claims of a patent define the invention to which the patentee is entitled the right to exclude." *Phillips,* 415 F.3d at 1312. The "objective baseline" for construing patent claims is determining "how a person of ordinary skill in the art understands a claim term." *Phillips*, 415 F.3d at 1313. "That starting point is based on the well-settled understanding that inventors are typically persons skilled in the field of the invention and that patents are addressed to and intended to be read by others of skill in the pertinent art." *Id.* Often, other evidence will provide context for characterizing the person having ordinary skill in the art. *See generally* § 11.3.5.3.1 (discussing the standards for determining the characteristics and knowledge of a "person having ordinary skill in the art" (often abbreviated to "PHOSITA")). Temporally, the "ordinary meaning" of a claim term is the meaning that the term would have to a person of ordinary skill in the art "at the time of the invention, i.e., as of the effective filing date of the patent application." *Phillips*, 415 F.3d at 1313. The "effective filing date" is the earlier of the actual filing date or the filing date of an application from which priority is accorded. *See* § 11.3.3.2 n.9. This is quite significant (and can generate evidentiary challenges) because the meaning of scientific and technical terms can change significantly during the life span of a patent. In the field of digital technology, for example, change can occur unbelievably rapidly given the exponential rate of advance in computer technology. Litigation over patent claims can occur multiple technological generations after the patent claim term was drafted.

The court's task is to interpret claims through the eyes of a person having ordinary skill in the art field of the invention. That person "is deemed to read the words used in the patent documents with an understanding of their meaning in the field, and to have knowledge of any special meaning and usage in the field." *Phillips*, 415 F.3d at 1313 (quoting *Multiform Desiccants, Inc. v. Medzam, Ltd.*, 133 F.3d 1473, 1477 (Fed. Cir. 1998)). Interpreting patent claims thus requires the court to consider "the same resources as would that person, viz., the patent specification and the prosecution history." *Id.* The proper definition of a claim term is

context-dependent. The patent and its prosecution history "usually provide[] the technological and temporal context to enable the court to ascertain the meaning of the claim to a person having ordinary skill in the art at the time of the invention." *Id.* (quoting *V-Formation, Inc. v. Benneton Group SpA*, 401 F.3d 1307, 1310 (Fed. Cir. 2005)). Thus, patent claims are to be interpreted in light of this "intrinsic" evidence (i.e., the patent specification and its prosecution history) as well as pertinent "extrinsic" evidence (i.e., evidence showing the usage of the terms in the field of art).

5.2.3.2.1 Claim Construction Framework

Chart 5.6 illustrates the starting and ending points for claim construction. We might analogize the claim construction process to a train line. The first station is the claim itself. The court will begin the process by reading the claim term in the context of the claim and surrounding words to assess its meaning. The court will also read the claim term in the context of the patent as a whole: "Importantly, the person of ordinary skill in the art is deemed to read the claim term not only in the context of the particular claim in which the disputed term appears, but in the context of the entire patent, including the specification." *See Phillips*, 415 F.3d at 1313. If the claim term is a common, non-technical word or phrase, its meaning will immediately begin to take on meaning. "In some cases, the ordinary meaning of claim language as understood by a person of skill in the art may be readily apparent even to lay judges, and claim construction in such cases involves little more than the application of the widely accepted meaning of commonly understood words. . . . In such circumstances, general purpose dictionaries may be helpful." *Id.* at 1314 (citation omitted).[4] If the term is technical, the court may ascribe little if any meaning to the term without substantial background education. Furthermore, "because patentees frequently use terms idiosyncratically, the court looks to 'those sources available to the public that show what a person of skill in the art would have understood disputed claim language to mean.'" *Id.* (citation omitted).

The ultimate destination for this process is the proper construction. This will depend on the appropriate legal standard (the meaning that a person having ordinary skill in the art would attach), the relevant time period (the time of the invention), and the pertinent internal and external evidence. It may also depend on the jurisprudence of claim construction, such as the doctrine of claim differentiation. The court will develop the proper construction based upon a searching review of the intrinsic evidence ad any other evidence that the parties present. There are multiple potential "stops" along this track.

---

4. Later in the *Phillips* decision, the Federal Circuit highlighted several pitfalls of relying on dictionaries for claim construction, most notably the tendency toward abstract meaning as opposed to the meaning of claim terms in the context of the patent. *See Phillips*, 415 F.3d at 1319-24; *see also* § 5.4.

Chart 5.6
Claim Construction Process: Starting Point and Destination

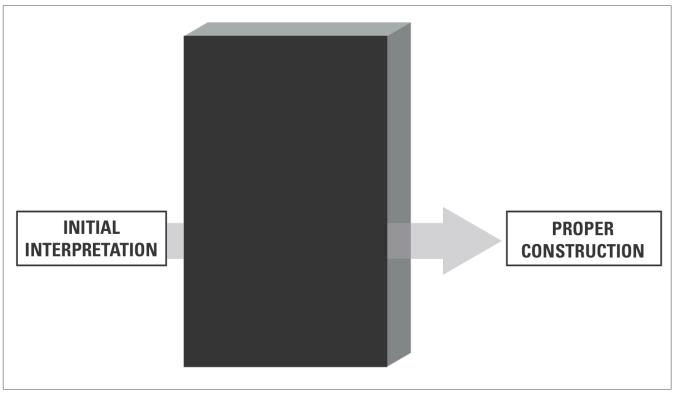

Chart 5.7 illustrates the principal potential stops along the claim construction line. The parties must inform the court which stations are relevant to interpreting the claim and what specific evidence bears on the proposed interpretation. If no evidence is adduced or if the evidence cited is unilluminating, then the court's initial interpretation becomes the proper construction (or the court might deem the claim term as it is). More commonly, the parties will call attention to various sources of meaning from the specification, file wrapper, or extrinsic sources. We explore the jurisprudence relating to this process below.

Chart 5.7
Claim Construction Process: Inside the Black Box

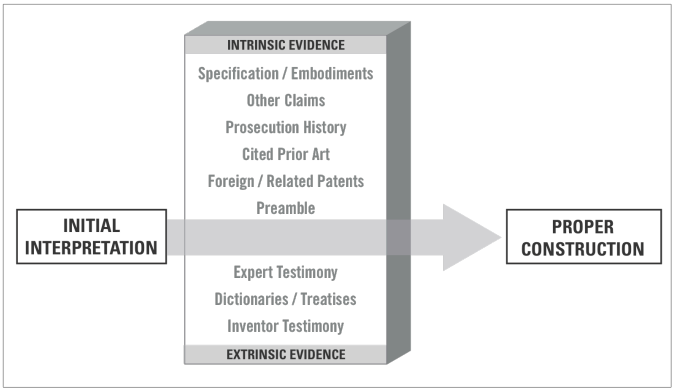

Note that the stations along the claim construction railroad are aligned vertically but not horizontally. The vertical alignment reflects the priority to be accorded intrinsic evidence. The Federal Circuit has often noted, and the *Phillips* decision affirms, that the specification is the "primary basis for construing the claim" and is in most cases "the best source for understanding a technical term."

See Phillips, 415 F.3d at 1314 (citations omitted). But the reason that the sources are not organized horizontally reflects the principle set forth in *Phillips* that "there is no magic formula or catechism for conducting claim construction. Nor is the court barred from considering any particular sources or required to analyze sources in any specific sequence, as long as those sources are not used to contradict claim meaning that is unambiguous in light of the intrinsic evidence." *Id.* at 1324.

Chart 5.8 frames the substantive analysis. The principles set forth at the top of the chart ground the inquiry. With the foundation in place, the court is prepared to focus upon the claim term in question. As reflected in the center of the chart, "ordinary meaning" is the focus of the inquiry. But it is not necessarily the ultimate destination. The proper construction depends critically upon how the term is used in the patent. Various doctrines pull toward a narrower or broader construction. The subsections that follow examine those forces.

Chart 5.8
Functional Landscape of Claim Construction Principles and Doctrines

5.2.3.2.2 Starting Point for Analysis: "Ordinary Meaning"

The *Phillips* framework uses "ordinary and customary meaning" as the objective baseline for claim construction. 415 F.3d at 1312-13. It is important to recognize, however, that even the term "ordinary and customary meaning" has a spe-

cialized meaning in patent law. It does not denote the ordinary meaning that a layperson would ascribe to the claim term. Nor does it signify abstract meaning or meaning in a vacuum. Rather, the "ordinary meaning" under *Phillips* is meaning that a person having ordinary skill in the art would attribute to the claim term in the context of the entire patent, including the specification and prosecution history. *Id.* at 1313. *Phillips* recognizes that there may be instances where the specification gives a "special definition" to a claim term that differs from the ordinary and customary meaning of a claim term or that the applicant may have expressly disavowed or disclaimed coverage to the full breadth of the claims under the ordinary and customary meaning. *Id.* at 1316. However, even in those cases where the applicant's statements in the patent and prosecution history do not rise to the level of a "special definition," or a "disavowal" or "disclaimer," *Phillips* recognizes that the proper construction may depart from the ordinary and customary meaning of a claim term.

Phillips reaffirmed that the "starting point" of the analysis is to identify the "ordinary meaning" of the disputed claim terms. However, it overruled prior doctrine on how this ordinary meaning is determined and on the extent to which the ordinary meaning ultimately governs the construction of patent terms. Nonetheless, litigants commonly, and wrongly, attempt to rely on pre-*Phillips* cases that use a now-rejected approach. Because of this shift in the law that has rendered certain lines of authority obsolete, it is important to recognize what changed under *Phillips* and which statements from the previous caselaw are no longer valid.

5.2.3.2.2.1 "Presumption of Dictionary Definition" Obsolete

Prior to *Phillips*, a widely applied line of Federal Circuit authority instructed district courts to emphasize dictionary definitions as the source of ordinary meaning. *Tex. Digital Sys., Inc. v. Telegenix, Inc.*, 308 F.3d 1193 (Fed. Cir. 2002), established a "presumption in favor of a dictionary definition." *Id.* at 1204. *Texas Digital* instructed district courts to determine the ordinary meaning of claim terms through reference to dictionaries and other sources *before* interpreting the specification. *Id. Texas Digital* established a "heavy presumption" that this dictionary-derived ordinary meaning applied. *Id.* at 1202. Overcoming this presumption required showing that the patentee "has clearly set forth an explicit definition of the term different from its ordinary meaning," or that "the inventor has disavowed or disclaimed scope of coverage, by using words or expressions of manifest exclusion or restriction, representing a clear disavowal of claim scope." *Id.* at 1204. *Phillips* specifically criticized *Texas Digital*'s reliance on dictionaries, which improperly "focuses the inquiry on the abstract meaning of words rather than on the meaning of claim terms within the context of the patent." *Phillips*, 415 F.3d at 1321.

5.2.3.2.2.2 No "Heavy Presumption" of Ordinary Meaning; No Requirement of Explicit Definition in Order to Depart from Ordinary Meaning

Under *Phillips*, there is no longer a "heavy presumption" that the ordinary meaning of patent terms governs.[5] Nor is it necessary to show that the specification contains an "explicit definition" of a claim term, or that the inventor "disavowed or disclaimed scope of coverage," in order to construe claims more narrowly than the terse wording of patent claims may otherwise suggest. *Phillips* overturned the *Texas Digital* methodology by providing that the meaning of claim terms is derived, foremost, from the patent documents themselves. Under *Phillips*, it is the intrinsic record that provides the "technological and temporal context" to determine the meaning of claim terms. *Phillips* refocuses the analysis on the invention described in the specification: "The claims are directed to the invention that is described in the specification; they do not have meaning removed from the context from which they arose." *Id.* at 1316 (quoting *Network, LLC v. Centraal Corp.*, 242 F.3d 1347, 1352 (Fed. Cir. 2001)). Although lawyers commonly cite to language from *Texas Digital*-era case law, those standards are obsolete.

Similarly, courts should no longer erect a high bar for finding an "explicit definition" or "disavowal" or "disclaimer" in construing a claim term more narrowly (or sometimes more broadly) than its customary meaning. It is appropriate to depart from the "ordinary" meaning where the intrinsic evidence persuasively demonstrates "what the inventors actually invented and intended to envelop with the claim." *Phillips*, 415 F.3d at 1316 (quoting *Renishaw*, 158 F.3d at 1250). In sum, "[t]he construction that stays true to the claim language and most naturally aligns with the patent's description of the invention will be, in the end, the correct construction." *Id.*

5.2.3.2.3 Interpreting Claim Language in Light of the Specification

A fundamental challenge in patent law is how to construe claims "in view of the specification." *Phillips*, 415 F.3d at 1315. Tension arises from the competing principles that provide, on the one hand, that "the claims made in the patent are the sole measure of the grant." *Phillips*, 415 F.3d at 1312 (quoting *Aro Mfg. Co. v.*

5. The "heavy presumption of ordinary meaning" standard was routinely applied pre-*Phillips*. For the first three years since October 2004 (when the Federal Circuit granted en banc review in *Phillips*), the Federal Circuit did not apply this "heavy presumption standard." Although *Elbex Video, Ltd. v. Sensormatic Elecs. Corp.*, 508 F.3d 1366, 1371 (Fed. Cir. 2007) cites the "heavy presumption" standard, it appears to be an outlier.

Convertible Top Replacement Co., 365 U.S. 336, 339 (1961)), and, on the other hand, that a claim term "can be defined only in a way that comports with the instrument as a whole." *Phillips*, 415 F.3d at 1316 (quoting *Markman v. Westview Instruments, Inc.*, 517 U.S. 370, 389 (1996)). When, and to what extent, the terse wording of patent claims should be interpreted in light of the inventor's other statements in the specification gives rise to a common tension in patent litigation. Indeed, *Phillips* arose out of precisely this type of dispute. And since *Phillips*, the Federal Circuit has continued to acknowledge the "tightrope" that district courts must walk when construing claims in light of the specification. *Andersen Corp. v. Fiber Composites, LLC*, 474 F.3d 1361, 1373 (Fed. Cir. 2007).

There are several common sources of meaning for claim construction: the preferred embodiments; the manner in which the patentee distinguishes the prior art; the usage of the claim term elsewhere in the patent document (including other claims); disclaimers within the prosecution history; and the preamble. Furthermore, as explored in subsequent sections, some commonly used claim terms have developed greater clarity through patent drafting convention and judicial decisions.

5.2.3.2.3.1 The Role of Preferred Embodiments in Claim Construction

Patent specifications typically describe the claimed invention through the use of illustrations or example. In the jargon of patent law, they are characterized as "preferred embodiments." Often the specification will recite a few or even many preferred embodiments of an invention. Claim construction disputes often center on the import of such illustrations: (1) Must each claim encompass the preferred embodiments?; (2) Are the claims limited to the preferred embodiments?; (3) Does the number or range of embodiments affect the breadth of the claims?; (4) Does ambiguity in a claim term limit its scope to the preferred embodiments?; and (5) Do characterizations of embodiments as "the invention" or "the present invention" limit the patent accordingly?

5.2.3.2.3.1.1 Claim Scope Generally Includes Preferred Embodiments

The patent claims should generally be construed to encompass the preferred embodiments described in the specification, and it is generally error to adopt a construction that excludes them. *See On-Line Techs., Inc. v. Bodenseewerk Perkin-Elmer GmbH*, 386 F.3d 1133, 1138 (Fed. Cir. 2004) ("[A] claim interpretation that excludes a preferred embodiment from the scope of the claim is rarely, if ever, correct."), *quoted in MBO Labs., Inc. v. Becton, Dickinson & Co.*, 474 F.3d 1323, 1333 (Fed. Cir. 2007). Important exceptions to this oft-cited rule apply—such as

where there is a disclaimer in the specification or prosecution history, *see Oatey Co. v. IPS Corp.* 514 F.3d 1271, 1277 (Fed. Cir. 2008); *N. Am. Container, Inc. v. Plastipak Packaging, Inc.*, 415 F.3d 1335, 1345-46 (Fed. Cir. 2005); *SciMed Life Sys., Inc. v. Advanced Cardiovascular Sys., Inc.*, 242 F.3d 1337, 1344 (Fed. Cir. 2001); *see also* § 5.2.3.2.3, an embodiment is directed to only a subset of claims, *see Helmsderfer v. Bobrick Washroom Equip., Inc.*, 527 F.3d 1379 (Fed. Cir. 2008), or the ordinary meaning simply cannot be stretched to encompass the embodiment, *see id.*

There the two primary scenarios in which a claim can properly be construed in a way that excludes an embodiment: (1) where a change occurs in the file history—i.e., the specification remains static during prosecution but the applicant disclaims some claim scope that she originally sought during prosecution; and (2) where the specification contains and claims multiple embodiments, a particular claim may not cover a particular embodiment because other claims do.

5.2.3.2.3.1.2 Is the Patent Limited to the Preferred Embodiments?

A common dispute is whether the claim scope should be limited to the embodiments. The mere fact of a particular embodiment being taught (or even "preferred") is generally not sufficient to justify limiting otherwise broad claim scope to the particular embodiment taught. *See, e.g.*, *Agfa Corp. v. Creo Prods., Inc.*, 451 F.3d 1366, 1376-77 (Fed. Cir. 2006) (finding that a claimed "stack" of printing plates was not limited to the particular horizontal stack shown in the specification); *Ormco Corp. v. Align Tech., Inc.*, 463 F.3d 1299, 1306-07 (Fed. Cir. 2006) (finding that a claimed "geometry" of orthodontic teeth was not limited to the geometries of orthodontics shown in the specification); *Acumed LLC v. Stryker Corp.*, 483 F.3d 800 (Fed. Cir. 2007) (finding that a claimed "transverse" hole in a bone nail was not limited to the particular "perpendicular" orientation shown in the specification). The mere fact that the disclosed embodiments of a patented invention have a certain feature does not, by itself, justify limiting the scope of the claims to what is disclosed in the specification. Rather, the fact that the preferred embodiment teaches a certain configuration is just one factor that must be weighed along with other factors such as the clarity of the claim language, the specification's descriptions of the claimed invention, its statements distinguishing the invention from the prior art, and the consistent and uniform usage of claim terms. Other contributing factors include the applicant's statements to the PTO during patent prosecution and the doctrine of claim differentiation. Depending on the strength of these other factors, the scale may tip so that the claim is limited to the embodiment disclosed in the specification.

The *Phillips* court acknowledged that "there is sometimes a fine line between reading a claim in light of the specification, and reading a limitation into the

claim from the specification." 415 F.3d at 1323 (quoting *Comark Commc'ns, Inc. v. Harris Corp.*, 156 F.3d 1182, 1186-87 (Fed. Cir. 1998)). The Federal Circuit suggested that courts can reasonably and predictably discern this line by focusing on how a person of ordinary skill in the art would understand the claim terms. *Id.* The Federal Circuit has specifically rejected the contention that a court interpreting a patent with only one embodiment must limit the claims of that patent to that embodiment because § 112 requires that the claims themselves define the limits of a patent, and because a person of ordinary skill in the art would rarely do so. *Id.* (construing *Gemstar-TV Guide v. Int'l Trade Comm'n,* 383 F.3d 1352, 1366 (Fed. Cir. 2004)).

After reading the specification from the perspective of a person of ordinary skill in the art, the patentee's usage of a term within the specification and claims will usually make the distinction between a specification meant to set out specific examples of the invention to disclose how to make and use it and one in which the claims and embodiments are meant to be strictly coextensive. *Phillips,* 415 F.3d at 1323. District courts should bear in mind, however, that claim drafters routinely avoid providing a clear distinction between embodiments that define the invention and those that merely illustrate it. Through this approach, patentees may get the benefit of a narrow interpretation during prosecution (which may enhance the chances of allowance) while preserving the option asserting a broad interpretation after the patent issues in enforcement actions Thus, the "fine line" to which the Federal Circuit refers is often blurred.

5.2.3.2.3.1.3 Does the Number and/or Range of Embodiments Affect the Scope of the Claims?

The Federal Circuit observed in *Phillips* that "although the specification often describes very specific embodiments of the invention, we have repeatedly warned against confining the claims to those embodiments." 415 F.3d at 1323. The court also "expressly rejected the contention that if a patent describes only a single embodiment, the claims of the patent must be construed as being limited to that embodiment." *Id.* Nonetheless, the number and/or range of embodiments may have relevance to the scope of claims.

Disputes over how broadly to construe claims in light of the specification trace back to the patent drafter. The patent drafter is the "least cost avoider" in terms of creating a document that can be readily understood and relied on by the public and any courts that may have to interpret it. Scant descriptions of the invention may not necessarily be limiting, but it is uniquely in the power of the patentee to avoid close calls of claim interpretation by clear and detailed descriptions of the full scope of the claimed invention. Just as empirical scientists will provide multiple data points so as to gauge the limits or reach of their theories, it might reasona-

bly be hoped that patentees would likewise express inventions of an empirical nature in a number and range of embodiments if necessary to convey fully the scope of the claimed invention to the public. Even though a claim is not ordinarily limited to a particular disclosed embodiment, the number and range of embodiments may ultimately affect the scope that can be supported, because those embodiments may inform the court how a person of ordinary skill in the art would understand the claim terms—the issue upon which the court's focus should ultimately remain. See *Phillips*, 415 F.3d at 1323. Proper claim drafting will reduce the burden of, uncertainty surrounding, and need for claim construction.

It may be somewhat ironic, therefore, that claim construction often affords patents supported by a single embodiment with potentially broader scope (ordinary meaning) than more fully illustrated patents. Without as much to go on, the court in the former case is often left with simply the plain language. The principal countervailing force confronting the patentee—the risk that the claim will fail the written description requirement—does not exert much effect as it is often difficult to prove this basis for invalidity. By contrast, patents that are more fully illustrated may provide a clearer basis for construing (and, in some cases, circumscribing) the scope of the claims. A more balanced middle ground would be to consider the lack of a significant range of illustrative embodiments to be a factor in construing claims based on an empirical foundation. Just as an empirical theory supported by just a single or few examples will be narrower than one supported by a rich and broad range of observations, so the scope of an empirically based invention supported by a single or narrow range of embodiments should, all other factors the same, be understood more narrowly. Such an approach would have the benefit of providing patent drafters with greater incentive to articulate the boundaries of the claimed invention. It should be noted, however, that claims based upon a conceptual or theoretical foundation may not require disclosure of multiple embodiments to prove their validity or delineate their scope. In such cases, the operative scientific principle will often support and delineate its scope.

5.2.3.2.3.1.4 Does Ambiguity in a Claim Term Limit its Scope to Preferred Embodiment(s)?

When the claim language is ambiguous, courts look to the specification to determine a reasonable interpretation. *See Rexnord Corp. v. Laitrop Corp.*, 274 F.3d 1336, 1343 (Fed. Cir. 2001) ("[I]f the term or terms chosen by the patentee so deprive the claim of clarity that there is no means by which the scope of the claim may be ascertained by one of ordinary skill in the art from the language used, a court must look to the specification and file history to define the ambiguous term in the first instance.") (internal marks omitted). In *Comark Commc'ns, Inc. v. Harris Corp.*, 156 F.3d 1182, 1187 (Fed. Cir.1998), the Federal Circuit observed

that interpreting claim language in light of the specification is proper when a term is "so amorphous that one of skill in the art can only reconcile the claim language with the inventor's disclosure by recourse to the specification." At the same time, the court cautioned against reading limitations from the specification into the claims (as opposed to interpreting claim language in light of the specification) and declined to do so in that case. *Id.* Nonetheless, courts have on occasion limited claim terms to the preferred embodiments where there is no other way of grounding the ambiguous language. *See, e.g.*, *Chimie v. PPG Indus., Inc.*, 402 F.3d 1371 (Fed. Cir. 2005).

5.2.3.2.3.1.5 Characterizations of "The Invention" or "The Present Invention"

When the patentee uses descriptive terms such as "the invention" or "the present invention" to describe what is claimed, then those descriptive embodiments may be definitional. For example, *Honeywell Int'l, Inc. v. ITT Indus., Inc.,* 452 F.3d 1312, 1318 (Fed. Cir. 2006), concerned claims to a "fuel injection system component." Even though the ordinary and customary meaning of a "fuel injection system component" is not limited to a fuel filter, the Federal Circuit found that the proper construction was narrower than that customary meaning and should be limited to a fuel filter. Beyond the fact that all the disclosed embodiments disclosed only fuel filters, the specification repeatedly described the fuel filter as "this invention" and "the present invention." Applying *Phillips,* the court found that there was no need to show that the inventor had "disavowed or disclaimed scope of coverage," as *Texas Digital* had previously set as the standard. *Id.* Rather, the Federal Circuit noted, given the repeated descriptions in the patent specification of "the invention," that "[t]he public is entitled to take the patentee at his word and the word was that the invention is a fuel filter." *Id.; see also Andersen Corp. v. Fiber Composites, LLC,* 474 F.3d 1361, 1367-68 (Fed. Cir. 2007) (limiting claim term "composite composition" to pellets in light of statements in specification that are "not descriptions of particular embodiments, but are characterizations directed to the invention as a whole"); *Microsoft Corp. v. Multi-Tech. Sys., Inc.,* 357 F.3d 1340, 1348 (Fed. Cir. 2004) (finding that statements in common specification serve to limit claim language because they "are not limited to describing a preferred embodiment, but more broadly describe the overall inventions of all three patents"); *Alloc, Inc. v. Int'l Trade Comm'n,* 342 F.3d 1361, 1370 (Fed. Cir. 2003) ("[T]his court looks to whether the specification refers to a limitation only as a part of less than all possible embodiments or whether the specification read as a whole suggests that the very character of the invention requires the limitation be a part of every embodiment.").

The fact that a specification discloses only a single embodiment does not, by itself, compel limiting claim scope to that embodiment. *Phillips*, 415 F.3d at 1323.

There must be additional evidence beyond the disclosure of a single embodiment to justify narrowing a construction to that embodiment. *Agfa Corp. v. Creo Prods. Inc.*, 451 F.3d 1366, 1376-77 (Fed. Cir. 2006). However, the fact that only a single embodiment is shown is a factor that, when taken into consideration with the patentee's description of the invention, may show that the inventor only intended to claim a particular feature as his invention. *See Honeywell Int'l, Inc. v. ITT Indus., Inc.*, 452 F.3d 1312, 1318 (Fed. Cir. 2006) (limiting scope of "fuel injection system component" to a "fuel filter" because "[t]he written description's detailed discussion of the prior art problem addressed by the patented invention, *viz.,* leakage of non-metal fuel filters in EFI systems, further supports the conclusion that the fuel filter is not a preferred embodiment, but an only embodiment.").

5.2.3.2.3.2 Distinctions Over the Prior Art

As with descriptions of "the invention," the patentee's manner of distinguishing his invention over the prior art may be definitional. That is, the specification's emphasis on the importance of a particular feature in solving the problems of the prior art is an important factor in defining the claims. These statements distinguishing the claimed invention from the prior art go to the heart of *Phillips*' instruction to construe claims consistent with a "full understanding of what the inventors actually invented." *Phillips*, 415 F.3d at 1316. For example, in *Inpro II Licensing, S.A.R.L. v. T-Mobile USA, Inc.*, 450 F.3d 1350, 1354-55 (Fed. Cir. 2006), the Federal Circuit affirmed the construction of "host interface" as a "direct parallel bus interface." Among the dispositive factors in this narrow construction were that the only embodiment disclosed was a direct parallel bus interface and that "the specification emphasizes the importance of a parallel connection in solving the problems of the previously used serial connection." *Id.* Since under *Phillips*, there was no need to show that the inventor had disclaimed scope of coverage, T-Mobile obtained a narrowing construction by demonstrating "what the inventor has described as the invention." *Id.* at 1355 (quoting *Network, LLC v. Centraal Corp.*, 242 F.3d 1347, 1352 (Fed. Cir. 2001)).

Statements distinguishing the prior art must be sufficiently clear to warrant a narrowing construction. *Ventana Med. Sys., Inc. v. Biogenex Labs., Inc.*, 473 F.3d 1173, 1180-81 (Fed. Cir. 2006), concerned claims to a method of "dispensing" reagents onto a microscope slide. The question was whether "dispensing" was limited to "direct dispensing" (i.e., where the reagent container directly dispenses reagents onto the slide without an intermediary), or whether the claims encompassed the use of an intermediary device to "sip and spit" the reagents from the reagent container onto the slide. The specification contained general criticisms of prior art dispensers, including those using "sip and spit" approaches, as well as those using "direct dispensing" approaches. Because the specification equally criticized both types of prior art dispensers, there was nothing to suggest that the inventor was

describing the invention to be the use of "direct" instead of "sip and spit" dispensing. Therefore, the Federal Circuit found it was inappropriate to limit the claim scope. *Id.* at 1181 (refusing to narrow claim where challenger "points to only general statements by the inventors indicating that their invention is intended to improve upon prior art staining methods.").

5.2.3.2.3.3 Consistent Usage of Claim Terms

Another claim construction principle is that the consistent and uniform usage of a claim term in a certain way in the specification may be definitional, showing the "ordinary meaning" of the claim term in the context of the invention. In such circumstances, otherwise broad language in the claim may be limited by the specification's description of the invention. Consistent usage of a claim term in the specification can be definitional even without a showing that there is an "express definition" of the term or a "disclaimer," which the now-overruled *Texas Digital* would have required. For example, the claim term "board" was found to be limited to wooden boards (as opposed to plastic lumber) in light of consistent statements in the specification and prosecution history describing the claimed "boards" as made from wood. *Nystrom v. TREX Co., Inc.*, 424 F.3d 1136, 1145 (Fed. Cir. 2005)) ("The written description and prosecution history consistently use the term 'board' to refer to wood decking materials cut from a log.").

5.2.3.2.3.4 Prosecution Disclaimers

Beyond using the prosecution history to ascertain the ordinary meaning of claim terms, the prosecution history can also be used to determine whether there was a "disclaimer" of claim scope. In order to convince the PTO to issue patent claims that have been rejected in light of the prior art, patent applicants frequently have to represent that their patent claims do *not* cover certain technologies. These statements are important limitations on claim scope. *Phillips*, 415 F.3d at 1317 ("The purpose of consulting the prosecution history in construing a claim is to exclude any interpretation that was disclaimed during prosecution."). The legal standard for finding a prosecution history disclaimer requires "a clear and unmistakable disavowal of scope during prosecution." *Purdue Pharma L.P. v. Endo Pharms. Inc.*, 438 F.3d 1123, 1136 (Fed. Cir. 2006). For example, in *Atofina v. Great Lakes Chem. Corp.*, 441 F.3d 991, 997 (Fed. Cir. 2006), the Federal Circuit found a prosecution disclaimer to apply, and construed "chromium catalyst" as a catalyst where the only catalytically active material is chromium without the addition of metal oxides or non-inert additives. The decision was based on the applicants' statements in the prosecution history which distinguished the claimed invention from the prior art's use of metal oxides and non-inert additives, and which empha-

sized the "criticality of utilizing chromium catalyst alone rather than in combination with other metal components." *Id.*

By contrast, ambiguous statements in the prosecution history do not warrant a disclaimer, particularly when the applicant's statements are subject to multiple interpretations. *SanDisk Corp. v. Memorex Prods., Inc.*, 415 F.3d 1278, 1287 (Fed. Cir. 2005) ("There is no 'clear and unmistakable' disclaimer if a prosecution argument is subject to more than one reasonable interpretation, one of which is consistent with a proffered meaning of the disputed term."). For example, in *Golight, Inc. v. Wal-Mart Stores, Inc.,* 355 F.3d 1327, 1332 (Fed. Cir. 2004), a claim to a "rotating" spotlight was not found subject to a disclaimer, where statements in the prosecution history referring to the spotlight rotating "through 360°" were attributable to other claims, not the claim at issue. *See also LG Elecs., Inc. v. Bizcom Elecs., Inc.*, 453 F.3d 1364, 1373-74 (Fed. Cir. 2006) (finding that prosecution history statements that the prior art did not teach accessing data signals "over a system bus" were not sufficiently clear to justify limiting claims to require claimed signals to travel over a system bus), *reversed on other grounds by Quanta v. LG Elecs.,* 128 S. Ct. 2109 (2008).

5.2.3.2.4 Looking to Other Claims: The Doctrine of Claim Differentiation

Patents typically contain multiple claims, with variations among the claims describing the patented invention. The doctrine of "claim differentiation" provides that "each claim in a patent is presumptively different in scope." *RF Del., Inc. v. Pac. Keystone Techs., Inc.*, 326 F.3d 1255, 1263 (Fed. Cir. 2003). The doctrine is based on "the common sense notion that different words or phrases used in separate claims are presumed to indicate that the claims have different meanings and scope." *Andersen Corp. v. Fiber Composites, LLC*, 474 F.3d 1361, 1369 (Fed. Cir. 2007). It also reflects the economic reality that patent fees depend on the number of claims in the patent. Patentees would be disinclined to purchase additional claims if they did not offer different scope. But it is important to recognize that the uncertainties of claim interpretation lead all but the most financially sensitive patent drafters to seek multiple overlapping claims. *See generally* Mark A. Lemley, *The Limits of Claim Differentiation*, 22 Berkeley Tech. L.J. 1389 (2007). Additional claims do not always cover different subject matter. Claim differentiation gives rise to a rebuttable presumption for claim construction purposes, especially when comparing the scope of an independent claim in view of its dependent claims: "[T]he presence of a dependent claim that adds a particular limitation gives rise to a presumption that the limitation in question is not present in the independent claim." *Phillips*, 415 F.3d at 1315.

"Pure" claim differentiation refers to the situation where there is no meaningful difference between an independent claim and its dependent claim, except for

the presence of an added limitation in the dependent claim. In that situation, the presumption is especially strong that the independent claim is *not* restricted by the added limitation in the dependent claim. *Acumed LLC v. Stryker Corp.*, 483 F.3d 800, 806 (Fed. Cir. 2007) ("That presumption is especially strong when the limitation in dispute is the only meaningful difference between an independent and dependent claim."). In such situations, construing the independent claim to share that limitation would render the dependent claim "superfluous." *Andersen Corp. v. Fiber Composites, LLC*, 474 F.3d 1361, 1369-70 (Fed. Cir. 2007) ("To the extent that the absence of such difference in meaning and scope would make a claim superfluous, the doctrine of claim differentiation states the presumption that the difference between claims is significant.").

The doctrine of claim differentiation has less force when there are additional differences between the independent claim and its dependent claim, such that the dependent claim would not be rendered "superfluous" by limiting the independent claim. *See, e.g.*, *SRAM Corp. v. AD-II Eng'g, Inc.*, 465 F.3d 1351, 1358 (Fed. Cir. 2006) (restricting independent claim to use of "precision index downshifting" even though this term was present in dependent claim, when additional differences existed between the independent and dependent claim).

In the case of two independent claims, the doctrine of claim differentiation is not applicable because patent drafters are free to, and commonly do, claim an invention using multiple linguistic variations in multiple independent claims. *See, e.g.*, *Andersen Corp. v. Fiber Composites, LLC*, 474 F.3d 1361, 1370 (Fed. Cir. 2007) (declining to apply claim differentiation to separate groups of claims to "pellets," "linear extrudates," and "composite compositions" where there were other differences varying the scope of the claims); *Curtiss-Wright Flow Control Corp. v. Velan, Inc.*, 438 F.3d 1374, 1380-81 (Fed. Cir. 2006) (recognizing that "[c]laim drafters can also use different terms to define the exact same subject matter."); *Hormone Research Found. v. Genentech, Inc.*, 904 F.2d 1558, 1567 n.15 (Fed. Cir. 1990) ("It is not unusual that separate claims may define the invention using different terminology, especially where (as here) independent claims are involved."); *Andersen Corp. v. Fiber Composites, LLC*, 474 F.3d 1361, 1370 (Fed. Cir. 2007) (declining to apply claim differentiation to separate groups of claims to "pellets," "linear extrudates," and "composite compositions" where there were other differences varying the scope of the claims).

Even in cases of "pure" claim differentiation where the presumption would apply most strongly, the doctrine can be trumped by other considerations. Claim differentiation "can not broaden claims beyond their correct scope." *Curtiss-Wright Flow Control Corp. v. Velan, Inc.*, 438 F.3d 1374, 1380-81 (Fed. Cir. 2006). That is, "the written description and prosecution history overcome any presumption arising from the doctrine of claim differentiation." *Andersen Corp. v. Fiber Composites, LLC*, 474 F.3d 1361, 1369-70 (Fed. Cir. 2007). For example, where the patent applicant disclaimed subject matter during prosecution in order

to obtain the patent, the patentee cannot attempt to recapture that subject matter through the doctrine of claim differentiation. *See Fantasy Sports Properties, Inc. v. Sportsline.com, Inc.*, 287 F.3d 1108, 1115-16 (Fed. Cir. 2002). Given the wide variety of situations where the doctrine of claim differentiation does not apply, the Federal Circuit has cautioned that "[c]laim differentiation is a guide, not a rigid rule." *Laitram Corp. v. Rexnord, Inc.*, 939 F.2d 1533, 1538 (Fed. Cir. 1991).

5.2.3.2.4.1 Presumption of Claim Differentiation May Be Rebutted Based on Specification or Prosecution History Estoppel

Limiting statements in the specification or prosecution history can rebut a broad claim term interpretation, even if the breadth of that term is reinforced by the doctrine of claim differentiation. *See Seachange Int'l, Inc. v. C-COR, Inc.*, 413 F.3d 1361, 1369 (Fed. Cir. 2005) (noting that claim differentiation is "not a hard and fast rule and will be overcome by a contrary construction dictated by the written description or prosecution history"). For example, in *Regents of Univ. of Cal. v. Dakocytomation Cal., Inc.*, 517 F.3d 1364, 1375 (Fed. Cir. 2008), the Federal Circuit approved of a limiting construction on the independent claim term "heterogenous mixture" to exclude repetitive sequences, notwithstanding the presence of dependent claims that do not exclude them.

5.2.3.2.4.2 Presumption of Claim Differentiation Does Not Apply to Means-Plus-Function Claims

As discussed more fully in § 5.2.3.5, means-plus-function claims are limited to the corresponding structures, and their equivalents under § 112, ¶ 6. The statutorily mandated scope of these claims cannot be stretched through resort to claim differentiation. *See, e.g.*, *Cross Med. Prods., Inc. v. Medtronic Sofamor Danek, Inc.*, 424 F.3d 1293, 1304 (Fed. Cir. 2005) ("[A]lthough the doctrine of claim differentiation suggests that claim 5 should be broader than claim 1, any presumption that the claims differ with respect to this feature may be overcome by a contrary construction mandated by the application of § 112, ¶ 6."); *Laitram Corp. v. Rexnord, Inc.*, 939 F.2d 1533, 1538 (Fed. Cir. 1991) (holding that the doctrine of claim differentiation yields to an interpretation mandated by § 112, ¶ 6).

5.2.3.2.5 Significance of the "Preamble" in Claim Construction

Patent claims commonly have a "preamble" that introduces the claimed invention. Some preambles may be just a few words, while others may be lengthy and detailed. A common dispute is whether or not the wording of the preamble is

a limitation on the scope of the patent. A famously vague standard governs this inquiry: terms in the preamble are limiting when they are "necessary to give life, meaning, and vitality to the claims." *Kropa v. Robie*, 187 F.2d 150, 861 (CCPA 1951). The following principles are used in applying this standard.

Where the preamble is grammatically essential to the claim, the general rule is that it is limiting. *Catalina Mktg. Int'l, Inc. v. Coolsavings.com, Inc.*, 289 F.3d 801, 808-09 (Fed. Cir. 2002). For example, where other terms in the body of the claim derive "antecedent basis" from the preamble, then the preamble is commonly found to be limiting. *Id.* at 808; *see also Bicon, Inc. v. Strauman Co.*, 441 F.3d 945, 952 (Fed. Cir. 2006). Likewise, where the preamble is "essential to understand limitations or terms in the claim body," it is similarly limiting. *Catalina*, 289 F.3d at 808.

If a preamble term is a "necessary and defining aspect of the invention" the preamble is limiting. *On Demand Mach. Corp. v. Ingram Indus., Inc.*, 442 F.3d 1331, 1343 (Fed. Cir. 2006); *see also MBO Labs., Inc. v. Becton, Dickinson & Co.*, 474 F.3d 1323, 1330 (Fed. Cir. 2007) (interpreting the preamble term "immediately" as limiting, because "[t]he patentee here has clearly indicated via the specification and the prosecution history that the invention provides as an essential feature, immediate needle safety upon removal from the patient."). This principle applies with special force where the language of the preamble was used during prosecution history to distinguish the claimed invention from the prior art. *Catalina*, 289 F.3d at 808; *see also In re Cruciferous Sprout Litig.*, 301 F.3d 1343, 1347-48 (Fed. Cir. 2004) (finding the preamble phrase "rich in glucosinolates" limiting because the patentee relied on the preamble to distinguish the prior art in prosecution).

The countervailing principle is that a preamble is not limiting when the body of the claim "describes a structurally complete invention." *Catalina*, 289 F.3d at 809; *see also Intertool, Ltd. v. Texar Corp.*, 369 F.3d 1289, 1295 (Fed. Cir. 2004) (finding the preamble non-limiting where the body of the claim described the invention in "complete and exacting structural detail"). Statements of intended uses of an invention are generally *not* limiting. *Catalina*, 289 F.3d at 809. This is because "the patentability of apparatus or composition claims depends on the claimed structure, not on the use or purpose of that structure." *Id.* Thus, many cases turn on the question of whether a statement in the preamble describing the purpose of an invention is deemed to describe a "necessary and defining aspect of the invention" (which is limiting), or is simply a "statement of intended use" (which is not limiting). A review of the Federal Circuit's cases over the past ten years, in cases that litigated the issue of whether to construe the preamble, reveals that the dominant approach in the close cases is to construe the preamble as a limitation.

5.2.3.3 Claim Terms Having Conventional, Presumed, or Established Meanings

Claim terms generally take their meaning from the language of the patent, the prosecution history, and the applicable extrinsic evidence. Some terms, however, have meanings that are derived from conventional usage in claim drafting or prior judicial construction. The case law in this area, however, is notoriously malleable. Take, for example, the term "a" (or "an"). The Federal Circuit has "has repeatedly emphasized that an indefinite article 'a' or 'an' in patent parlance carries the meaning of 'one or more' in open-ended claims containing the transitional phrase 'comprising.'" *Baldwin Graphic Sys., Inc. v. Sibert, Inc.* 512 F.3d 1338, 1342 (Fed. Cir. 2008). The court commented that this interpretation can "best [be] described as a rule, rather than merely as a presumption or even a convention. The exceptions to this rule are extremely limited: a patentee must 'evince[ ] a clear intent' to limit 'a' or 'an' to 'one.' . . . An exception to the general rule that 'a' or 'an' means more than one only arises where the language of the claims themselves, the specification, or the prosecution history necessitate a departure from the rule." *Id.* at 1342-43 (quoting *KCJ Corp. v. Kinetic Concepts, Inc.*, 223 F.3d 1351, 1356 (Fed. Cir. 2000)) (alterations in original).

Just two weeks after stating this "rule," however, the Federal Circuit found that the exception (singular meaning) applied based upon the claims and written description in *Tivo, Inc. v. Echostar Communications Corporation*, 516 F.3d 1290, 1303-04 (Fed. Cir. 2008) ("The pertinent claim language refers to 'assembl[ing] said video and audio components into an MPEG stream,' which in context clearly indicates that two separate components are assembled into a single stream, not that the video components are assembled into one stream and the audio components into a second stream.") Thus, even for as simple and commonplace a word as "a," the term can have divergent meanings based on the context of the patent (and despite the best efforts of the Federal Circuit to institute "rules" for its construction). Courts must remain sensitive to the context of patent claims, and avoid rigidly applying what may appear to be an established meaning.

"Transitional phrases" are terms that are used to link the various limitations in a claim. These transitional phrases govern, among other things, whether the claim is "open" or "closed" to the presence of additional elements. Restated, these transitional phrases define whether a claim with defined limitations can be infringed by a device that has additional elements beyond what is specified in the claim. The term "consisting of" is a closed transitional phrase, while the term "comprising" is an open transitional phrase. *See AFG Indus., Inc. v. Cardinal IG Co., Inc.*, 239 F.3d 1239, 1244-45 (Fed. Cir. 2001). These terms have particularly established meanings based upon decades of consistent use in claim drafting.

Table 5.6 collects terms that have been commonly construed by the Federal Circuit. As the table reflects, some of these terms have been construed differently depending upon the context. Thus, courts should not woodenly adopt meanings

from prior cases. Rather, they should be aware that the Federal Circuit has considered some terms in the past and has, in some cases, attributed general meanings. In every case, however, courts should carefully examine the claim term in context. Where a term does not have a clear meaning from the intrinsic evidence, then the jurisprudence may offer useful guidance.

Table 5.6
Commonly Construed Terms

Articles

Term	*Meaning*	*Citation*
a, an	Dominant meaning: one or more.	*Baldwin Graphic Sys., Inc. v. Siebert*, 512 F.3d 1338, 1342-43 (Fed. Cir. 2008).
	However, sometimes means: only one.	*Tivo, Inc. v. Echostar Commc'ns Corp.*, 516 F.3d 1290 (Fed. Cir. 2008).
the, said	Indicates identity with a previously used claim term.	*Baldwin Graphic Sys., Inc. v. Siebert, Inc.*, 512 F.3d 1338, 1342-43 (Fed. Cir. 2008).
plurality	At least two	*York Prods., Inc. v. Cent. Tractor Farm & Family Ctr.*, 99 F.3d 1568, 1575 (Fed. Cir. 1996).
first, second	Distinguishes between repeated instances of an element or limitation.	*Free Motion Fitness, Inc. v. Cybex Int'l*, 423 F.3d 1343, 1348 (2005); *3M Innovative Properties Co. v. Avery Dennison Corp.*, 350 F.3d 1365, 1371 (Fed. Cir. 2003).

Transitional Phrases

Term	*Meaning*	*Citation*
comprising	Is an "open" phrase and allows coverage of technologies that employ additional, unrecited elements.	*AFG Indus., Inc. v. Cardinal IG Go., Inc.*, 239 F.3d 1239, 1245 (Fed. Cir. 2001).
containing	Synonymous with "comprising."	*Mars, Inc. v. H.J. Heinz Co.*, 377 F.3d 1369, 1377 (Fed. Cir. 2004).
including	Synonymous with "comprising."	*Amgen Inc. v. Hoechst Marion Roussel, Inc.*, 314 F.3d 1313, 1345 (Fed. Cir. 2003). Note that in *Toro Co. v. White Consol. Indus., Inc.*, 199 F.3d 1295 (Fed. Cir. 1999), the term "including" was found to require permanency of the recited element—i.e., the claim phrase "cover including means for increasing the pressure" required the device's restriction ring to be permanently affixed to and included as part of the air inlet cover, so claims were not literally infringed by device having separate restriction ring that was inserted and removed as a separate part.

Table 5.6: Commonly Construed Terms, *continued*

Transitional Phrases, *continued*

Term	*Meaning*	*Citation*
having	May be "open" but does not convey an "open" meaning as strongly as "comprising."	*Crystal Semiconductor Corp. v. TriTech Microelectronics Intern., Inc.*, 246 F.3d 1336 (Fed. Cir. 2001); *Pieczenik v. Dyax Corp.*, 76 F. App'x 293, 296 (Fed. Cir. 2003)(unpublished);
	May be closed, depending on the context of the patent.	*Lampi Corp. v. Am. Power Prods., Inc.*, 228 F.3d 1365, 1376 (Fed. Cir. 2000).
consisting of	Is a "closed" phrase and excludes elements, steps, or ingredients not specified in the claims.	*CIAS, Inc. v. Alliance Gaming Corp.*, 504 F.3d 1356, 1361 (Fed. Cir. 2007); *AFG Industries, Inc. v. Cardinal IG Go., Inc.*, 239 F.3d 1239, 1245 (Fed. Cir. 2001).
consisting essentially of	Occupies a middle ground between "open" and "closed" claims and is open to unlisted ingredients that do not materially affect the basic and novel properties of the invention.	*Atlas Powder Co. v. E.I. du Pont De Nemours & Co.*, 750 F.2d 1569, 1574 (Fed. Cir. 1984); *PPG Industries v. Guardian Indus. Corp.*, 156 F.3d 1351, 1354 (Fed. Cir. 1998).
composed of	Synonymous with "consisting essentially of."	*AFG Indus., Inc. v. Cardinal IG Go., Inc.*, 239 F.3d 1239, 1245 (Fed. Cir. 2001).

Terms of Degree

Term	*Meaning*	*Citation*
about	Avoids a strict numerical boundary.	*Cen. Admixture Pharmacy Servs., Inc. v. Advanced Cardiac Solutions, P.C.*, 482 F.3d 1347, 1355-56 (Fed. Cir. 2007).
essentially	Synonymous with "about."	*Eiselstein v. Frank*, 52 F.3d 1035, 1039 (Fed. Cir. 1995).

Table 5.6: Commonly Construed Terms, *continued*

Terms of Degree, *continued*

Term	*Meaning*	*Citation*
substantially	Meaning is highly dependent on intrinsic evidence.	*Deering Precision Instruments, L.L.C. v. Vector Distribution Sys., Inc.*, 347 F.3d 1314, 1322 (Fed. Cir. 2003) (construing the term "substantially in an imaginary plane."); *Epcon Gas Sys., Inc. v. Bauer Compressors, Inc.*, 279 F.3d 1022 (Fed. Cir. 2002) (construing the terms "substantially constant" and "substantially below"); *Zodiac Pool Care, Inc. v. Hoffinger Indus.*, Inc., 206 F.3d 1408 (Fed. Cir. 2000) (construing the term "substantially inward"); *York Prods., Inc. v. Cent. Tractor Farm & Family Ctr.*, 99 F.3d 1568 (Fed. Cir. 1996) (construing the term "substantially the entire height thereof"); *Tex. Instruments Inc. v. Cypress Semiconductor Corp.*, 90 F.3d 1558 (Fed. Cir. 1996) (construing the term "substantially in the common plane").
up to about	May include or exclude the endpoint, depending on the context. Where the endpoint is numeric (*e.g.*, up to about 10%), the endpoint may be included; whereas, where the endpoint is physical (*e.g.*, painting the wall up to about the door), the endpoint may be excluded.	*AK Steel Corp. v. Sollac and Ugine*, 344 F.3d 1234 (Fed. Cir. 2003).
surround	To encircle on all sides simultaneously.	*Libman Co. v. Quickie Mfg. Corp.*, 74 F. App'x 900, 904-05 (2003) (unpublished) (heavy reliance on dictionary definition).
in, between, within	Not required to be completely or continuously in, between or within; between may be satisfied even if extension beyond boundaries.	*Foster v. Hallco Mfg. Co., Inc.*, 1997 U.S. App. LEXIS 18989 (Fed. Cir. 1997) (unpublished) (heavy reliance on dictionary definition).
to	When A travels "to" B, it is sufficient to travel on a pathway with B as a destination, possibly visiting intervening components.	*Cybor Corp. v. FAS Techs., Inc.*, 138 F.3d 1448, 1458-59 (Fed. Cir. 1998).
defined	Can be used to mean that one element creates or forms the outline or shape of another element.	*Rival Co. v. Sunbeam Corp.*, 185 F.3d 885 (table) (Fed. Cir. 1999).

Table 5.6: Commonly Construed Terms, *continued*

Other

Term	*Meaning*	*Citation*
whereby	A "whereby" clause that merely states the result of the limitations in the claim adds nothing to the patentability or substance of the claim.	*Hoffer v. Microsoft Corp.*, 405 F.3d 1326, 1329 (Fed. Cir. 2005); *Tex. Instruments Inc. v. U.S. Int'l Trade Comm'n*, 988 F.2d 1165, 1172 (Fed. Cir. 1993).
	However, a "whereby" clause that sets forth a structural limitation and not merely the results achieved by the claimed structure is a positive limitation of the claim.	*Scheinman v. Zalkind*, 112 F.2d 1017, 1019 (CCPA 1940).
standard, normal, conventional, traditional	Time-dependent terms that are limited to technologies existing at the time of the invention.	*PC Connector Solutions LLC v. SmartDisk Corp.*, 406 F.3d 1359, 1363 (Fed. Cir. 2005).
such as	Of a kind or character about to be indicated, suggested, or exemplified; for instance.	*Catalina Mktg. Int'l v. Coolsavings.com, Inc.*, 289 F.3d 801 (Fed. Cir. 2002).
adapted	Fit for a purpose; capable of a purpose.	*Mattox v. Infotopia, Inc.*, 136 F. App'x 366, 369 (Fed. Cir. 2005) (unpublished).
assembly	A collection of parts to form a structure.	*Kegel Co., Inc. v. AMF Bowling, Inc.*, 127 F.3d 1420, 1427 (Fed. Cir. 1997).
uniform	Having always the same form.	*Middleton, Inc. v. Minn. Mining and Mfg. Co.*, 411 F.3d 1384, 1387 (Fed. Cir. 2002) (reliance on *Texas Digital* and "heavy presumption" rule).
predetermined	Determined beforehand.	*Koito Mfg. Co., Ltd. v. Turn-Key-Tech, LLC*, 381 F.3d 1142, 1147-48 (Fed. Cir. 2004).

5.2.3.4 Interpreting Terms to Preserve Validity

As an additional, although relatively narrow, interpretative principle, "claims should be so construed, if possible, as to sustain their validity." *Rhine v. Casio, Inc.*, 183 F.3d 1342, 1345 (Fed. Cir. 1999). An analysis of validity is a component of claim construction. *See, e.g.*, *Phillips v. AWH Corp.*, 415 F.3d 1303, 1327 (Fed. Cir. 2005) (en banc) (citing *Nazomi Commc'ns, Inc. v. Arm Holdings, PLC*, 403 F.3d 1364, 1368-69 (Fed. Cir. 2005)); *Generation II Orthotics Inc. v. Med. Tech. Inc.*, 263 F.3d 1356, 1365 (Fed. Cir. 2001) ("[C]laims can only be construed to preserve their validity where the proposed claim construction is 'practicable,' is based on sound claim construction principles, and does not revise or ignore the explicit language of the claims."); *Elekta Instrument S.A. v. O.U.R. Scientific Int'l, Inc.*, 214 F.3d 1302, 1309 (Fed. Cir. 2000) ("having concluded that the amended claim is susceptible of only one reasonable construction, we cannot construe the claim differently from its plain meaning in order to preserve its validity"); *E.I. du Pont de Nemours & Co. v. Phillips Petroleum Co.*, 849 F.2d 1430, 1434 (Fed. Cir. 1988) (rejecting argument that limitations should be added to claims to preserve the validity of the claims)). The doctrine applies only when the claim term in question is ambiguous (i.e., it cannot be construed without the need to consider whether the effect of alternative constructions on validity) and a strong inference can be shown "that the PTO would have recognized that one claim interpretation would render the claim invalid, and that the PTO would not have issued the patent assuming that to be the proper construction of the term." *Phillips*, 415 F.3d at 1328.

5.2.3.5 Special Case: Means-Plus-Function Claims Limited to Structures in Specification and Equivalents Thereof as of Time of Issuance

A special class of claim language is construed as means-plus-function claim terms. When a party seeks to have a term construed as a means-plus-function term, the analysis is governed by § 112, ¶ 6:

> An element in a claim for a combination may be expressed as a means or a step for performing a specified function without the recital of structure, material, or acts in support thereof, and such claim shall be construed to cover the corresponding structure, material, or acts described in the specification and equivalents thereof.

When § 112, ¶ 6, is found to apply to claim language, then the claim term is construed by identifying the "function" associated with the claim language, and then identifying the corresponding "structure" in the specification associated with that function. The claim is construed to be limited to those corresponding structures

and their equivalents. Thus, parties frequently attempt to invoke § 112, ¶ 6, as a way to narrow the scope of a patent to the particular technologies disclosed in the specification. Chart 5.9 sets forth the framework for construing functional claims terms. The court addresses Steps 1, 2A, and 2B as part of claim construction. Step 2C—determining whether the accused device is an "equivalent thereof"—is a question of fact for the jury.

Chart 5.9
Framework for Construing Means-Plus-Function Claims

Step 1: Is term in question "means-plus-function"?
Rebuttable Presumption: Inclusion of "means"
- rebutted if claim includes structure

Step 2: Interpretation Process:

A. Identify function of term (based on claim term language, not embodiments)

B. Identify corresponding structure, material, or act based on disclosed embodiments

C. Infringement stage (questions of fact): Determine whether accused device falls within "equivalents thereof" (as of time of issuance)

5.2.3.5.1 Step 1: Is the Term in Question "Means-Plus-Function"?

When presented with a request to invoke § 112, ¶ 6, the court must first determine if that section applies. Means-plus-function claiming applies only to "purely functional limitations that do not provide the structure that performs the recited function." *Depuy Spine, Inc. v. Medtronic Sofamor Sanek, Inc.*, 469 F.3d 1005, 1023 (Fed. Cir. 2006). There is a rebuttable presumption that § 112, ¶ 6, applies "[i]f the word 'means' appears in a claim element in association with a function." *Callicrate v. Wadsworth Mfg., Inc.*, 427 F.3d 1361, 1368 (Fed. Cir. 2005). The use of the term "means" in a claim limitation typically implies that the inventor used the means-plus-function claim format, which invokes the associated statutory limits on the literal scope of that claim limitation. *See Greenberg v. Ethicon Endo-Surgery, Inc.*, 91 F.3d 1580, 1584 (Fed. Cir. 1996). Nonetheless, this implication does not apply where the claim language itself provides the structure that performs the recited function. *See Phillips v. AWH Corp.*, 415 F.3d 1303 (Fed. Cir. 2005) (en banc) (finding that a claim limitation stating "means disposed inside the shell for increasing its load bearing capacity comprising internal steel baffles" provides the relevant structure ("internal steel baffles") and hence is not limited to

the embodiments in the specification and equivalents thereof); *Cole v. Kimberly-Clark Corp.*, 102 F.3d 524, 531 (Fed. Cir. 1996) (finding that use of the phrase "perforation means" does not invoke § 112, ¶ 6).

Conversely, "a claim term that does not use 'means' will trigger the rebuttable presumption that 35 U.S.C. § 112, ¶ 6 does not apply." *Depuy Spine, Inc. v. Medtronic Sofamor Danek, Inc.*, 469 F.3d 1005, 1023 (Fed. Cir. 2006). Disputes commonly arise over whether terms should be construed as means-plus-function language despite lacking an explicit "means" format. The presumption that such terms are *not* means-plus-function terms "can be rebutted by showing that the claim element recites a function without reciting sufficient structure for performing that function." *Id.* (citation omitted); *see also Raytheon Co. v. Roper Corp.*, 724 F.2d 951, 957 (Fed. Cir. 1983) (construing functional language introduced by "so that" to be equivalent to "means for" claim language); *Mas-Hamilton Group v. LaGard*, Inc., 156 F.3d 1206, 1213-15 (Fed. Cir. 1998) (finding that "lever moving element" was not a known structure in the lock art and hence should be read to invoke the specific embodiments in the specification and equivalents thereof). Whether a claim invokes § 112, ¶ 6, is decided on a limitation-by-limitation basis looking to the patent and the prosecution history. *See Cole*, 102 F.3d at 531.

For example, the Federal Circuit applied § 112, ¶ 6 to the term "colorant selection mechanism," explaining that "[t]he term 'mechanism' standing alone connotes no more structure than the term 'means,'" and "the term 'colorant selection' … is not defined in the specification and has no dictionary definition, and there is no suggestion that it has a generally understood meaning in the art." *Mass. Inst. of Tech. v. Abacus Software*, 462 F.3d 1344, 1354 (Fed. Cir. 2006). By contrast, the Federal Circuit found § 112, ¶ 6, inapplicable to the term "compression member" because "dictionary definitions and experts on *both* sides confirm that 'compression member' is an expression that was understood by persons of ordinary skill in the art to describe a kind of structure." *Depuy Spine, Inc. v. Medtronic Sofamor Danek, Inc.*, 469 F.3d 1005, 1023 (Fed. Cir. 2006).

5.2.3.5.2 Step 2: Interpretation of Means-Plus-Function Claim Terms

5.2.3.5.2.1 Step 2A: Identify Claim Term Function

If the court concludes that § 112, ¶ 6, applies to a claim term, then the court must first identify the function of that term. It is important to identify the function associated with means-plus-function claim language before identifying the corresponding structure, material, or acts, and not to confuse these two analytically separate steps. *See JVW Enters., Inc. v. Interact Accessories, Inc.*, 424 F.3d 1324, 1330 (Fed. Cir. 2005) ("Determining a claimed function and identifying structure corresponding to that function involve distinct, albeit related, steps that

must occur in a particular order."). Errors arise when courts attempt to identify the function of a claimed invention in reference to a working embodiment, rather than by identifying function solely based on the claim language. *Id.* Attributing functions to a working device, rather than focusing on the claim language, may wrongly sweep additional functions into the claim. *Id.*

5.2.3.5.2.2 Step 2B: Identify "Corresponding Structure, Material, or Acts"

After identifying the claimed function, the court must identify the corresponding structure in the specification. A proper construction should account for "all structure in the specification corresponding to the claimed function." *Callicrate v. Wadsworth Mfg., Inc.*, 427 F.3d 1361, 1369 (Fed. Cir. 2005). It is error to limit the corresponding structure to just the preferred embodiment. *Id.*

5.2.3.5.2.3 Step 2C: "Equivalents Thereof"

In addition to structures, materials, or acts of the embodiments described in the patent's specification, the patentee is entitled to "equivalents thereof" as of the time the patent issued. Unlike the determination of function and corresponding structure, material, or acts which are clearly part of claim construction, the "equivalents" issue arises in the context of the infringement determination. The fact-finder must determine whether the means in the accused device or method performs the function stated in the claim in the same or an equivalent manner as the corresponding structures, materials, or acts set forth in the specification. *See Palumbo v. Don-Joy Co.*, 762 F.2d 969 (Fed. Cir. 1985).

5.2.3.5.2.4 Specific Rule for Means-Plus-Function Claims in the Computer Software Context

Merely pointing to a "computer" may not be sufficient to provide sufficient structure to a software or computer patent. Rather, the particular algorithms that carry out the invention may be the necessary "structure" to fulfill § 112, ¶ 6. In *WMS Gaming, Inc. v. Int'l Game Tech.*, 184 F.3d 1339 (Fed. Cir. 1999), the Federal Circuit ruled that the structure in the specification supporting the claim language "means for assigning" was *not* merely an algorithm executed by a computer, but was rather the particular algorithms taught in the specification. "In a means-plus-function claim in which the disclosed structure is a computer, or microprocessor, programmed to carry out an algorithm, the disclosed structure is not the general purpose computer, but rather the special purpose computer programmed to perform the disclosed algorithm." *Id.* at 1349.

5.2.4 Dysfunctional Claims: Mistakes and Indefiniteness

Courts must occasionally deal with dysfunctional claims, falling into two principal categories: (1) claims that contain obvious typographical, grammatical, or other errors that render the claim unworkable; and (2) claims that may be indefinite (possibly depending on how it is construed), raising the possibility that the claim is invalid under § 112, ¶ 2. The former may be obvious from the context and quite possibly can be due to the PTO's oversight. Some mistakes are more intractable, and go to the heart of the claimed invention. Deciding whether these mistakes can be fixed at all, who should fix them (the court or the PTO), and what the consequences of changing the claims are, can be challenging.

5.2.4.1 Mistakes

When issues of mistaken claim language arise, the parties often call into question the power of courts to correct mistakes in patents through the claim construction process. Attempts to correct patents raise the threshold question of whether the district court has legal authority to correct the alleged error or omission or whether such an issue must be brought to the PTO. The somewhat ambiguous answer is that "courts can continue to correct obvious minor typographical and clerical errors in patents," whereas "major errors are subject only to correction by the PTO." *Novo Indus., L.P. v. Micro Molds Corp.*, 350 F.3d 1348, 1357 (Fed. Cir. 2003).

The general rule is that "[t]he district court can correct an error only if the error is evident from the face of the patent." *See Group One, Ltd. v. Hallmark Cards, Inc.,* 407 F.3d 1297, 1303 (Fed. Cir. 2005). In order to permit correction, two requirements must be met: "A district court can correct a patent only if (1) the correction is not subject to reasonable debate based on consideration of the claim language and the specification *and* (2) the prosecution history does not suggest a different interpretation of the claims." *Novo Industries*, 350 F.3d at 1357, *quoted by id.* (emphasis added). Another general rule limiting the corrective power of courts is that "courts may not redraft claims, whether to make them operable or to sustain their validity." *Chef Am., Inc. v. Lamb-Weston, Inc.*, 358 F.3d 1371, 1374 (Fed. Cir. 2004).

Whether an error is "evident from the face of the patent" is a matter of frequent dispute. Where the applicant uses an inapt claim term, the applicant is typically held to the wording, even if the intended meaning is abundantly clear. For example, in *Chef America*, in a patent which dealt with a process for cooking dough, the claim language required "heating the resulting batter-coated dough *to* a temperature in the range of about 400°F to 850° F." *Id.* at 1371 (emphasis supplied). If the dough is heated "to" that temperature range, it would be burned to a crisp. Heating the dough "at" that temperature range supposedly results in a light,

flaky, crispy texture, according to the patent's specification. *See id.* at 1372. Even though it would be nonsensical to require heating the dough "to" 850° F, the court refused to construe the claims otherwise, and the Federal Circuit affirmed, which rendered the claims non-infringed. *See id.* at 1373-74.

Courts have somewhat greater leeway to correct administrative errors attributable to the PTO. Minor errors can be corrected by a district court, even if the prosecution history must be consulted in order to determine how to fix the error. For example, in *Hoffer v. Microsoft Corp.*, 405 F.3d 1326, 1331 (Fed. Cir. 2005), the Federal Circuit ruled that the district court could have fixed an error in patent claim numbering that left a dependent claim without a reference to its independent claim, where the appropriate reference was easily determined by reference to the prosecution history. However, where the PTO printing office omitted a block of claim text from a patent, that error was found to be beyond the district court's corrective powers. *See Group One, Ltd. v. Hallmark Cards, Inc.*, 407 F.3d 1297, 1303 (Fed. Cir. 2005) ("The prosecution history discloses that the missing language was required to be added by the examiner as a condition for issuance, but one cannot discern what language is missing simply by reading the patent. The district court does not have authority to correct the patent in such circumstances.").

When a district court construes a patent claim to correct an error, that construction generally has a retroactive effect, whereas corrections by the PTO are prospective. *See Novo Indus., L.P. v. Micro Molds Corp.*, 350 F.3d 1348, 1356 (Fed. Cir. 2003) (noting that a certificate of correction from the PTO is "only effective for causes of action arising after it was issued"). Thus, litigants have a strong incentive to fix errors through judicial construction as opposed to petitioning the PTO for a certificate of correction. However, the risk is that if the district court declines to fix the correction, the defective claims may be held invalid for indefiniteness, or may fail for other reasons such as non-infringement. *See, e.g.*, *id.* at 1358 (refusing to correct patent, and holding claim indefinite).

5.2.4.2 Indefiniteness

The potentially dispositive issue of "indefiniteness" is frequently intertwined with the claim construction process. "Indefiniteness" is an invalidity defense based on § 112, ¶ 2, which requires that the claims of a patent "particularly point[ ] out and distinctly claim[ ] the subject matter which the applicant regards as his invention." § 112. "The primary purpose of the definiteness requirement is to ensure that the claims are written in such a way that they give notice to the public of the extent of the legal protection afforded by the patent, so that interested members of the public, *e.g.,* competitors of the patent owner, can determine whether or not they infringe." *All Dental Prodx, Inc. v. Advantage Dental Prods., Inc.*, 309 F.3d 774, 779 (Fed. Cir. 2002).

When a claim cannot be construed, it is indefinite, and therefore invalid. *Aero Prods. Int'l, Inc. v. Intex Recreation Corp.*, 466 F.3d 1000, 1016 (Fed. Cir. 2006). Some authority suggests that all indefiniteness issues boil down to an issue of claim construction. *See id.* ("If a claim is amenable to construction, even though the task may be formidable and the conclusion may be one over which reasonable persons will disagree, the claim is not indefinite."). However, there are instances where a claim *can* be construed, but cannot be meaningfully applied, in which case the claim is also invalid for indefiniteness.

Indefiniteness is unique among claim construction issues in that it carries a burden of proof. Because ruling that a claim cannot be construed means that the claim is invalid, the "presumption of validity," *see* § 282, must be overcome by clear and convincing evidence. *See Bancorp Servs., L.L.C. v. Hartford Life Ins. Co.*, 359 F.3d 1367, 1371 (Fed. Cir. 2004).

Indefiniteness issues can arise from the wide variety of mistakes and nonsensical statements that pervade patents. Courts must decide if the claims are so "insolubly ambiguous" that they are not amenable to construction or application to an infringement determination. *Star Scientific, Inc. v. R.J. Reynolds Tobacco Co.*, 537 F.3d 1357 (Fed. Cir. 2008). Some indefiniteness disputes arise in the context of typos and printing errors that make a claim impossible to read or interpret. Minor errors are commonly overlooked, as long as persons of skill in the art can still understand the claims. *See Energizer Holdings, Inc. v. Int'l Trade Comm'n*, 435 F.3d 1366, 1370 (Fed. Cir. 2006) (refusing to invalidate claim where phrase "said zinc anode" lacked an antecedent basis). However, where entire blocks of text are missing from claims, then the public cannot reasonably be expected to appreciate their scope, and the claims are invalid. *Group One, Ltd. v. Hallmark Cards, Inc.*, 407 F.3d 1297, 1302 (Fed. Cir. 2005).

Another type of indefiniteness issue arises in the context of means-plus-function claims, where there is no structure in the specification corresponding to the claimed function. In such circumstances, the claim cannot be construed. *See Default Proof Credit Card Sys., Inc. v. Home Depot U.S.A., Inc.*, 412 F.3d 1291, 1302-03 (Fed. Cir. 2005) (invalidating claim for indefiniteness for lack of a structure in the specification corresponding to the claimed function).

Claims may also be invalid for indefiniteness where the claim language is so inherently standardless that it cannot be meaningfully applied. These matters are often treated as "claim construction" questions, although they might more aptly be considered a question of whether the claims are indefinite as applied. For example, a claim requiring an "aesthetically pleasing" interface screen was found indefinite where even the patentee's expert could not articulate how to determine infringement. *Datamize, LLC v. Plumtree Software, Inc.*, 417 F.3d 1342, 1354 (Fed. Cir. 2005). Another example is a claim directed to *both* a system and a method of using that system, which is invalid because the public cannot determine the acts that constitute infringement. *IPXL Holdings, L.L.C. v. Amazon.com, Inc.*,

430 F.3d 1377, 1383-84 (Fed. Cir. 2005). These latter examples are not so much "claim construction" issues, but rather are fundamental flaws in patent claims that make them impossible to apply. Nonetheless, these matters are commonly briefed during the claim construction process, and, depending on the case, it may be appropriate to handle them along with other claim construction matters.

5.3 Deference to Prior Claim Construction Rulings

Where a claim term has been construed in a prior judicial proceeding, it is not uncommon for one or more of the litigants to assert that the court is bound by or, at a minimum, should accord substantial deference to that prior ruling. The Supreme Court's *Markman* decision ostensibly encourages deference to prior claim construction in noting "the importance of uniformity in the treatment of a given patent as a reason to allocate all issues of construction to the court." *Markman v. Westview Instruments, Inc.*, 517 U.S. 370, 390 (1996). The Supreme Court acknowledged in the next paragraph, however, that "issue preclusion could not be asserted against new and independent infringement defendants even within a given jurisdiction."

Determining the standards for according deference to prior *Markman* orders as well as the application of such standards have proven to be complicated in practice. Parties, sometimes uncritically, invoke a variety of doctrines—claim preclusion, res judicata, issue preclusion, collateral estoppel, judicial estoppel, and/or stare decisis—in efforts to constrain or obviate *Markman* determinations. The application of such doctrines is made all the more complicated by the intermediate nature of *Markman* rulings. *Markman* rulings are a means (construing claim terms) to an end (adjudicating patent validity and infringement or, more commonly, reaching a settlement agreement), not final judgments in and of themselves. Even though *Markman* orders often serve as the basis for summary judgment rulings, they are not always vital to the outcome and might be vacated as part of a settlement agreement. An additional complicating factor is the characterization of *Markman* rulings as questions of law. As a result, determining the preclusive effect of such orders requires navigation of overlapping and not entirely cohesive civil procedure doctrines.

Before turning to the particular legal standards for according deference to prior *Markman* determinations, it will be useful to clarify the relevant terminology. There are four distinct concepts: (1) claim preclusion (and the related concept of res judicata); (2) issue preclusion (and the related concepts of collateral and direct estoppel); (3) judicial estoppel; and (4) stare decisis. Issue preclusion, judicial estoppel, and stare decisis are pertinent to the appropriate deference to be accorded prior claim construction rulings; claim preclusion generally does not come into play in claim construction.

5.3.1 Distinguishing Among Preclusion and Estoppel Doctrines

Although res judicata has historically been interpreted broadly to encompass the binding effect of a judgment in a prior case on claims asserted in pending litigation (and hence encompassing both claim and issue preclusion), the modern trend limits res judicata to claim preclusion. *See* Moore's Federal Practice § 131.10[1][b]. "Claim preclusion refers to the effect of a judgment in foreclosing litigation of a matter that never has been litigated, because of a determination that it should have been advanced in an earlier suit. Claim preclusion therefore encompasses the law of merger and bar." *Migra v. Warren City Sch. Dist. Bd. of Educ.*, 465 U.S. 75, 77 n. 1 (1984).[6] When a plaintiff prevails in a lawsuit arising from a particular transaction, all of the claims that the plaintiff raised *or could have raised* "merge" into that judgment and are "barred" from further litigation. See *Waid v. Merrill Area Public Schools*, 91 F.3d 857, 863 (7th Cir. 1996). If the plaintiff attempts to litigate any of those claims again, the judgment itself will serve as a defense. Since *Markman* rulings do not themselves resolve claims to relief (they merely interpret patent claim terms), they cannot be said to constitute "claim preclusion" judgments as that technical term is used in civil procedure terminology.

By contrast, the related doctrine of issue preclusion arises with some frequency in *Markman* proceedings. "Issue preclusion refers to the effect of a judgment in foreclosing the relitigation of a matter that has been litigated and decided. This effect is also referred to as direct or collateral estoppel." *Migra v. Warren City Sch. Dist. Bd. of Educ.*, 465 U.S. 75, 77 n.1 (1984); *see also Pharmacia & Upjohn Co. v. Mylan Pharm., Inc.*, 170 F.3d 1373, 1379 (Fed. Cir. 1999). Where a patentee (including those in privity with her) has previously litigated the scope of a patent claim term, a defendant in a subsequent lawsuit relating to the same patent claim term might assert issue preclusion to foreclose relitigation of that matter.[7] The test for issue preclusion, however, is relatively strict and authority is split on its role in the context of prior *Markman* rulings.

Judicial estoppel is an equitable doctrine that precludes a party from adopting a position that is inconsistent with a position taken in prior lawsuit, whether or not that issue had been actually litigated in the prior proceeding party. *See generally* Moore's Federal Practice § 18-134.30. "Where a party assumes a certain position in a legal proceeding, and succeeds in maintaining that position, he may not thereafter, simply because his interests have changed, assume a contrary position,

---

6. The Restatement (Second) of Judgments adheres to the broader definition of res judicata as encompassing both claim and issue preclusion. *See* Restatement (Second) of Judgments, Ch. 3 intro. note (1982).

7. A patentee cannot use issue preclusion offensively to foreclose a defendant who was not party to that prior litigation from litigating the scope of the patent claim. *See Tex. Instruments, Inc. v. Linear Techs. Corp.*, 182 F. Supp. 2d 580, 590 (E.D. Tex. 2002). Had the Federal Circuit construed that claim term, however, the defendant might be bound under the doctrine of stare decisis. *See* § 5.3.4.

especially if it be to the prejudice of the party who has acquiesced in the position formerly taken by him." *New Hampshire v. Maine*, 532 U.S. 742, 749 (2001) (quoting *Davis v. Wakelee*, 156 U.S. 680, 689 (1895)). The purpose of the doctrine is "to protect the integrity of the judicial process by prohibiting parties from deliberately changing positions according to the exigencies of the moment." *Id.* at 749-50 (internal marks omitted).

The doctrine of stare decisis promotes adherence to decided matters of law so as to foster stability and equal treatment. It takes its name from the Latin maxim *stare decisis et non quieta movere* or "to abide by the precedents and not to disturb settled points." The strength of such adherence depends on the source of the prior decision. Stare decisis compels lower courts to follow the decisions of higher courts on questions of law, whether applied to parties (or those in privity) or complete strangers to the prior proceeding. The decision of a district court is not binding precedent on a different judicial district, the same judicial district, or even the same judge in a different case under the doctrine of stare decisis. Rather, stare decisis requires only that the later court encountering the issue give consideration and careful analysis to that sister court's decision where applicable to a similar fact pattern. *See United States v. Rodriguez-Pacheco*, 475 F.3d 434, 441 (1st Cir. 2007).

5.3.2 Issue Preclusion/Collateral Estoppel

Issue preclusion most commonly arises in the context of claim construction where a patentee who has previously litigated a patent through a *Markman* ruling seeks a fresh opportunity to construe a claim and an opposing party argues that the prior construction should govern interpretation of the term in question. *Cf. Blonder-Tongue Labs, Inc. v. Univ. of Ill. Found.*, 402 U.S. 313, 333 (1971) (holding that a patentee whose patent is invalidated after "a full and fair" opportunity to litigate its validity is collaterally estopped from relitigating the validity of the patent). The previous litigation might have ended in a settlement agreement, including possibly an order vacating the claim construction ruling. The courts have divided on what effect, if any, to accord prior claim construction rulings.

The general standard for issue preclusion requires the party seeking to foreclose religitation of an issue to prove: (1) the issue sought to be precluded is identical to the issue decided in the prior action; (2) the issue was actually litigated in that action; (3) the party against whom collateral estoppel is sought had a full and fair opportunity to litigate the issue in the prior action; and (4) the determination was essential to the final judgment of the prior action. See *Innovad Inc. v. Microsoft Corp.*, 260 F.3d 1326, 1334 (Fed. Cir. 2001) (citing *In re Freeman*, 30 F.3d 1459, 1465 (Fed. Cir. 1994)). Courts apply the collateral estoppel standard of the regional circuit since issue preclusion is a procedural matter. *See RF Del., Inc. v. Pac. Keystone Tech., Inc.*, 326 F.3d 1255, 1261 (Fed. Cir. 2003).

5.3.2.1 Identity of Issues

The first prong of the issue preclusion test is satisfied where the patent claims (and claim terms) at issue in the *Markman* proceeding were interpreted in the prior case. *See, e.g.*, *Dynacore Holdings Corp. v. U.S. Philips Corp.*, 243 F. Supp. 2d 31, 35 (S.D.N.Y. 2003) (same patent claims at issue); *Kollmorgen Corp. v. Yaskawa Elec. Corp.*, 147 F. Supp. 2d 464, 466 (W.D. Va. 2001) (same); *Abbott Labs. v. Dey, L.P.*, 110 F. Supp. 2d 667, 669 (N.D. Ill. 2000) ("The claim construction issues disputed in this case are the same issues litigated in the [first] case."). When new claim terms are at issue, then collateral estoppel does not apply. *See, e.g.*, *P.A.T., Co. v. Ultrak, Inc.*, 948 F. Supp. 1518, 1520-21 (D. Kan. 1996). Since different claims within the same patent may use the same language, the "identity of issues" prong may nonetheless be satisfied if the language and context of the language are identical. *See In re Freeman*, 30 F.3d 1459, 1465 n.4 (Fed. Cir. 1994). Similarly, since different patents may emanate from the same specification, as in the case of divisional and continuation applications, *see* § § 11.2.2.3, 11.2.3.2, 11.2.3.3, the "identity of issues" prong may nonetheless be satisfied if the language and context of the language are identical. *See Masco Corp. v. United States*, 49 Fed. Cl. 337 (Ct. Fed. Cl. 2001) (applying collateral estoppel to a continuation patent (employing identical claim language) relating back to the patent construed in the earlier litigation).

5.3.2.2 Actual Litigation

To satisfy the "actual litigation" prong, the parties to the original litigation must have disputed the claim term at issue and it must have been adjudicated by the court. *See, e.g.*, *In re Freeman*, 30 F.3d 1459, 1466 (Fed. Cir. 1994); *Kollmorgen Corp. v. Yaskawa Elec. Corp.*, 147 F. Supp. 2d 464, 466 (W.D. Va. 2001) (stating that the "actually litigated" prong was met after a lengthy *Markman* hearing on the claim construction); *Abbott Labs. v. Dey, L.P.*, 110 F. Supp. 2d 667, 669-70 (N.D. Ill. 2000) (stating the "actually litigated" prong was met because the parties "briefed and argued the issues" before the judge); Restatement (Second) of Judgments § 27 comment d (1980). The "actual litigation" test is not satisfied where: an issue was raised but later abandoned, *see* Moore's Federal Practice § 132.03[2][e]; the court in the earlier proceeding declined to rule on the issue, *see* § 132.03[4][g]; there is ambiguity as to what was actually litigated and decided, *see* § 132.03[2][g]. Courts usually do not consider matters resolved by stipulation to have been actually litigated. *See, e.g.*, *United States v. Young*, 804 F.2d 116, 118 (8th Cir. 1986) ("A fact established in prior litigation not by judicial resolution but by stipulation has not been 'actually litigated'. . ."). An exception exists, however, where the parties intend to foreclose future litigation of the issue. *See Hartley v.*

Mentor Corp., 869 F.2d 1469, 1470 (Fed. Cir. 1989); Moore's Federal Practice § 132.03[2][i][ii].

5.3.2.3 Full and Fair Opportunity to Litigate

Issue preclusion requires that the underlying proceeding have afforded the party to be foreclosed from relitigation a full and fair opportunity to litigate. This means that issue preclusion can never be applied against a party not involved (or not in privity with those involved) in the prior proceeding. In *Blonder-Tongue Laboratories*, the Supreme Court identified a range of factors bearing on whether a patentee had a full and fair chance to litigate the validity of a patent: choice of forum; incentive to litigate; if the issue is obviousness, whether the first validity determination used the standards announced in *Graham v. John Deere Co.*, 383 U.S. 1, 12-24 (1966); whether opinions filed in the first case suggest that the prior case was one of those rare instances where the court or jury failed to grasp the technical subject matter and issues; and whether, without fault of its own, the patentee was deprived of crucial evidence or witnesses in the prior litigation. 402 U.S. at 329-34. The Court concluded that there is no "automatic formula" for assessing this prong and that "[i]n the end, decision will necessarily rest on the trial courts' sense of justice and equity." 402 U.S. at 334. Where the prior court has conducted a *Markman* hearing in which the parties were afforded the ability to present their positions and respond, the "full and fair opportunity to litigate" requirement has been satisfied. *See Kollmorgen Corp. v. Yaskawa Elec. Corp.*, 147 F. Supp. 2d 464, 466 (W.D. Va. 2001) (stating that a lengthy *Markman* hearing on the claim construction satisfied the requirement); *TM Patents, L.P. v. IBM Corp.*, 72 F. Supp. 2d 370, 375 (S.D.N.Y. 1999) (noting that both parties agreed that there was a full and fair opportunity to litigate because a *Markman* hearing occurred).

5.3.2.4 Determination Was Essential to the Final Judgment

The final prong of the issue preclusion test has attracted the most controversy in the claim construction context. It can usefully be divided into two separate inquires: whether (1) the prior ruling was "final"; and (2) the prior ruling was essential to the judgment.

5.3.2.4.1 Finality

The question of whether a prior claim construction constitutes a final judgment can be characterized along a spectrum. At the easier end of the spectrum, where the court in the prior proceeding interprets the pertinent claim language and issues a final, appealable judgment on validity or infringement, the finality requirement is satisfied. *See, e.g.*, *In re Freeman*, 30 F.3d 1459, 1466 (Fed. Cir.

1994) ("[J]udicial statements regarding the scope of patent claims are entitled to collateral estoppel effect in a subsequent infringement suit only to the extent that determination of scope was essential to a final judgment on the question of validity or infringement.") (quoting *A.B. Dick Co. v. Burroughs Corp.*, 713 F.2d 700, 704 (Fed. Cir. 1983)); *Home Diagnostics Inc. v. Lifescan, Inc.*, 120 F. Supp. 2d 864, 870 (N.D. Cal. 2000) (noting there must be a final judgment on validity or infringement for collateral estoppel to apply).

Issue preclusion can also arise out of a ruling granting summary judgment, *see Stevenson v. Sears, Roebuck & Co.*, 713 F.2d 705, 712 (Fed. Cir. 1983); *Security People, Inc. v. Medeco Security Locks, Inc.*, 59 F. Supp. 2d 1040 (N.D. Cal. 1999), *aff'd mem.*, 243 F.3d 555 (Fed. Cir. 2000), although denial of summary judgment or a grant of partial summary judgment usually does not have preclusive effect, *see Syntex Pharms. Int'l, Ltd. v. K-Line Pharms., Ltd.*, 905 F.2d 1525, 1526 (Fed. Cir. 1990) (noting that an order granting summary judgment of infringement of a patent and denying the alleged infringer's motion for summary judgment of invalidity did not present an appealable final judgment).

Similarly, the Federal Circuit held in *Transonic Sys. v. Non-Invasive Med. Techs. Corp.*, 75 F. App'x 765, 774 (Fed. Cir. 2003) (unpublished), that claim constructions conducted for purposes of a preliminary injunction ruling are not binding, even in the same litigation. Drawing upon the Supreme Court's statement in *University of Texas v. Camenisch*, 451 U.S. 390, 395 (1981), that "findings of fact and conclusions of law made by a court granting a preliminary injunction are not binding at trial on the merits," the Federal Circuit views claim constructions reached during appeals from a grant of a preliminary injunction to be tentative and hence not binding on the district court in subsequent proceedings. *See Guttman, Inc. v. Kopykake Enters.*, 302 F.3d 1352, 1361 (Fed. Cir. 2002) ("District courts may engage in a rolling claim construction, in which the court revisits and alters its interpretation of the claim terms as its understanding of the technology evolves."); *Transonic Sys.*, 75 F. App'x at 774. Therefore, claim constructions made in the context of preliminary injunction motions should not be considered final judgments as the district court remains "at liberty to change the construction of a claim term as the record in a case evolves after a preliminary injunction appeal." *See Transonic Sys.*, 75 F. App'x at 774.

Courts are deeply divided on the issue of finality when the outcome of the prior proceeding is a settlement. Several courts have interpreted the "finality" requirement liberally and functionally, looking to whether the previous judgment is sufficiently firm to be accorded preclusive effect. In *TM Patents, L.P. v. IBM Corp.*, 72 F. Supp. 2d 370, 375-77 (S.D.N.Y. 1999), the defendant sought to hold the patentee to a claim construction rendered in a case resolved through settlement. While recognizing that the settlement did not result in a final appealable judgment, the court nonetheless determined that the prior claim construction was entitled to preclusive effect. Seeking to elevate substance over form, the court fo-

cused upon the careful consideration of the issues during the prior litigation and drew upon the Supreme Court's policy ruminations in *Markman* emphasizing the importance of "uniformity in treatment of a given patent." *See Markman v. Westview Instruments, Inc.*, 517 U.S. 370, 390 (1996). The court recast "finality" for issue preclusion purposes as whether the prior litigation passed a stage for which there is "no really good reason for permitting [an issue] to be litigated again." *TM Patents*, 72 F. Supp. 2d at 376 (quoting *Lummus Co. v. Commonwealth Oil Ref. Co.*, 297 F.2d 80, 89 (2d Cir. 1961)). The court noted as well that the patentee voluntarily entered into the settlement agreement and the *Markman* ruling was not vacated as part of the settlement.

Although some other courts have since followed *TM Patents*' application of collateral estoppel in the context of settlements following *Markman* rulings, *see, e.g.*, *Edberg v. CPI-The Alternative Supplier, Inc.*, 156 F. Supp. 2d 190 (D. Conn. 2001), a contrary line of cases emerged holding that *Markman* rulings from cases that settled were not final and hence not properly entitled to preclusive effect. See *Graco Children's Prods., Inc. v. Regalo Int'l*, 77 F. Supp. 2d 660 (E.D. Pa. 1999); *Kollmorgen Corp. v. Yaskawa Elec. Corp.*, 147 F. Supp. 2d 464 (W.D. Va. 2001). The cases read the Supreme Court's policy discussion in the *Markman* case as merely recognizing the importance of uniformity, not changing the fundamental principles for issue preclusion. The *Graco Children's Products* court expressed concern that granting preclusive effect to cases settled after claim constructions might discourage settlement and encourage appeals by patentees who obtained favorable verdicts but nonetheless needed to correct what they believed to be unduly narrow or otherwise flawed claim constructions.

The preclusive effect of claim construction rulings in cases resolved by settlement came before the Federal Circuit in *RF Delaware, Inc. v. Pacific Keystone Technologies, Inc.*, 326 F.3d 1255 (Fed. Cir. 2003). *See also Dana v. E.S. Originals, Inc.*, 342 F.3d 1320 (Fed. Cir. 2003). Without expressly resolving the district court conflict, the Federal Circuit, applying Eleventh Circuit law, applied a stringent standard to the question of finality: "'if the parties to a suit enter into *an extrajudicial settlement or compromise*, there is no judgment, and future litigation is not barred by res judicata or collateral estoppel . . .'" *RF Delaware,* 326 F.3d at 1261 (quoting *Kaspar Wire Works, Inc. v. Leco Eng'g and Mach., Inc.*, 575 F.2d 530, 542 (5th Cir. 1978)) (emphasis in original). The Federal Circuit drew no implication from the Supreme Court's *Markman* language seized upon by the *TM Patents* court. Nonetheless, the court included some language inclining toward a functional approach to finality: "[f]or purposes of issue preclusion . . . , 'final judgment' includes any prior adjudication of an issue in another action that is determined to be sufficiently firm to be accorded conclusive effect." *Id.* at 1261 (quoting *Christo v. Padgett*, 223 F.3d 1324, 1339 n.47 (11th Cir. 2002) (citing Restatement (Second) of Judgments § 13 (1980)). Whether a decision is "sufficiently firm" depends on whether the parties were "fully heard." *Id.* The Federal Circuit

noted that the Eleventh Circuit held that a prior district court order issued after an evidentiary hearing satisfied the finality standard because the district court notified the parties of possible preclusive effect, considered the findings final, and entered a final order approving the proposed settlement. *Id.* at 1261 (quoting *Christo v. Padgett*, 223 F.3d at 1339). In *RF Delaware*, the Federal Circuit denied preclusive effect of the earlier *Markman* ruling on the grounds that there was no evidence that a *Markman* hearing had been conducted in the earlier case, the parties did not have notice that the court's order could have preclusive effect, and no final order approving the settlement was ever entered.

The Federal Circuit further addressed the preclusive effect of stipulated constructions and settlements in *Pfizer, Inc. v. Teva Pharmaceuticals, USA, Inc.*, 429 F.3d 1364 (Fed. Cir. 2005). Because the parties in the prior proceeding had stipulated that the agreed claim interpretation was for purposes of that litigation only, the Federal Circuit held that the agreement could not preclude litigation in a later case. Looking to jurisprudence on the interpretation of consent decrees, the court declared that "'the scope of a consent decree must be discerned within its four corners' and the conditions upon which a party has consented to waive its right to litigate particular issues 'must be respected.'" *Id.* at 1376 (quoting *United States v. Armour & Co.*, 402 U.S. 673, 682 (1971) and citing *In re Graham*, 973 F.2d 1089, 1097 (3d Cir. 1992) (noting that the Third Circuit defers to the intent of parties concerning the preclusive effect of agreed facts or claims in consent decrees and stipulations))

5.3.2.4.2 Essential to the Final Judgment

A final requirement for a prior *Markman* ruling to foreclose later interpretation over a claim term is that the earlier construction was essential to the final judgment. When the prior action turns upon resolution of a particular claim term or terms, the court's construction of other claim terms is "merely dictum, and therefore has no issue preclusive effect." *See Phonometrics, Inc. v. Northern Telecom Inc.*, 133 F.3d 1459, 1464 (Fed. Cir. 1998). To have a preclusive effect, the earlier court's interpretation of the particular claim had to be the reason for the previous outcome. *Jackson Jordan, Inc. v. Plasser Am. Corp.*, 747 F.2d 1567, 1577 (Fed. Cir. 1984).

A related principle is that issues of claim construction that cannot be appealed cannot be accorded preclusive effect. See *Hartley v. Mentor Corp.*, 869 F.2d 1469, 1472 (Fed. Cir. 1989). Thus, courts will not attach preclusive effect where a patentee loses on the issue of claim interpretation but nonetheless prevails on validity and infringement because the patentee lacked a basis for appealing the *Markman* ruling. *See Graco Children's Prods., Inc. v. Regalo Int'l*, 77 F. Supp. 2d 660, 664-65 (E.D. Pa. 1999); *Schering Corp. v. Amgen, Inc.*, 35 F. Supp. 2d 375, 377 n.2 (D. Del. 1999), *aff'd in part*, 222 F.3d 1347 (Fed. Cir. 2000).

5.3.2.5 Reasoned Deference as a Prudent Approach to Issue Preclusion

In cases in which the basis for applying issue preclusion is open to question, many courts have taken the approach of according prior *Markman* rulings "reasoned deference" in assessing the disputed claim terms. *See, e.g.*, *Finisar Corp. v. DirecTV Group, Inc.*, 523 F.3d 1323, 1329 (Fed. Cir. 2008) (noting that "in the interests of uniformity and correctness," the Federal Circuit "consults the claim analysis of different district courts on the identical terms in the context of the same patent."); *Visto Corp. v. Sproqit Techs., Inc.*, 445 F. Supp. 2d 1104, 1108 (N.D. Cal. 2006). Where no new arguments are offered, no new foundation is laid, and there has been no change in the applicable standards for construing claims, courts generally adopt the prior construction unless it is clearly unsound. Where new argument and evidence is adduced, then the review is more probing and independent. Even in cases in which courts have determined that collateral estoppel applies, they have nonetheless made some independent assessment of claim construction. Thus, even the *TM Patents* court, which held that a *Markman* ruling from a earlier case that settled prior to trial precluded relitigation of claim meaning, used the "reasoned deference" approach as a judicial backstop: "Finally, I have to observe that this issue of collateral estoppel . . . is of marginal practical importance, because I agree with just about everything Judge Young did when he construed the claims in the EMC action." *See TM Patents, L.P. v. IBM Corp.*, 72 F. Supp. 2d at 370.

5.3.3 Judicial Estoppel

The Federal Circuit has recognized the applicability of the equitable doctrine of judicial estoppel in the context of claim construction. See *Biomedical Patent Mgmt. Corp. v. Cal. Dep't of Health Servs.*, 505 F.3d 1328, 1341 (Fed. Cir. 2007); *Harris Corp. v. Ericsson*, 417 F.3d 1241 (Fed. Cir. 2005); *RF Del., Inc. v. Pac. Keystone Tech., Inc.*, 326 F.3d 1255 (Fed. Cir. 2003). As an equitable doctrine, the contours of judicial estoppel are relatively flexible. Although "[t]he circumstances under which judicial estoppel may appropriately be invoked are probably not reducible to any general formulation of principle," *Allen v. Zurich Ins. Co.*, 667 F.2d 1162, 1166 (4th Cir. 1982), the Supreme Court has emphasized three factors to consider in determining whether the doctrine applies: (1) whether a party's later position is "clearly inconsistent" with its earlier position; (2) whether the party succeeded in persuading a court to accept that party's earlier position, so that judicial acceptance of an inconsistent position in a later proceeding would create "the perception that either the first or second court was misled"; and (3) whether the party seeking to assert an inconsistent position would derive an unfair advantage

or impose an unfair detriment on the opposing party if not estopped. *See New Hampshire v. Maine*, 532 U.S. at 750-51.

The requirements for judicial estoppel partially overlap with the standard for issue preclusion (such as the element of identity of issues), but there are substantial differences as well. Unlike issue preclusion, judicial estoppel does not require strict mutuality, *Ryan Operations G.P. v. Santiam-Midwest Lumber Co.*, 81 F.3d 355, 360 (3d Cir. 1996) (stating that privity is not required for judicial estoppel), or even that the issue had been actually litigated in the prior proceeding. *See Lowery v. Stovall*, 92 F.3d 219, 223 n.3 (4th Cir. 1996). On the other hand, judicial estoppel typically requires strong evidence of improper intent to mislead a tribunal.

Judicial estoppel is also closely related to equitable estoppel. *See id.* Unlike a party asserting equitable estoppel, a party asserting judicial estoppel does not have to prove detrimental reliance because judicial estoppel is designed to protect the integrity of the courts rather than any interests of the litigants. *See Teledyne Indus., Inc. v. NLRB*, 911 F.2d 1214, 1220 (6th Cir. 1990). Therefore, judicial estoppel may apply in a particular case "where neither collateral estoppel nor equitable estoppel . . . would apply." *Allen*, 667 F.2d at 1166-67.

As with issue preclusion and other non-patent procedural issues, courts apply the standards for judicial estoppel developed by their regional circuit. *See Lampi Corp. v. Am. Power Prods., Inc.*, 228 F.3d 1365, 1377 (Fed. Cir. 2000). Such standards vary across the circuits. For example, although most circuits do not require mutuality of judicial estoppel, some courts limit the doctrine to those who were party to (or in privity with a party to) the prior proceeding. See *Nichols v. Scott*, 69 F.3d 1255, 1272 n.33 (5th Cir. 1995). The relative importance of particular factors varies as well. Some circuits consider intent—whether the inconsistency in position was for the purpose of gaining unfair advantage—to be most determinative. *See Lowery,* 92 F.3d at 224.[8]

5.3.4 Stare Decisis

Since claim construction is considered a question of law, lower courts must adhere to prior claim construction determinations by the Federal Circuit, even if the claim construction is applied to a party who was not involved in the prior litigation. *See Amgen, Inc. v. F. Hoffmann-La Roche Ltd.*, 494 F. Supp. 2d 54, 60 (D. Mass. 2007); *Tate Access Floors, Inc. v. Interface Architectural Res., Inc.*, 185 F.

8. The Federal Circuit holds that judicial estoppel does not normally prevent a party from altering on appeal an unsuccessful position on claim construction that it advocated before the trial court. See *RF Del., Inc. v. Pac. Keystone Tech., Inc.*, 326 F.3d 1255, 1262 (Fed. Cir. 2003) (quoting *Data Gen. Corp. v. Johnson*, 78 F.3d 1556, 1565 (Fed. Cir. 1996)) ("The doctrine of judicial estoppel is that where a party *successfully* urges a particular position in a legal proceeding, it is estopped from taking a contrary position in a subsequent proceeding where its interests have changed.") (emphasis in original).

Supp. 2d 588, 595 (D. Md. 2002); *Wang Labs., Inc. v. Oki Elec. Indus. Co., Ltd.*, 15 F. Supp. 2d 166, 175 (D. Mass. 1998) (holding that a prior Federal Circuit claim construction was binding against a party that was not a party to (or allowed intervention in) prior litigation interpreting the claim term in question). The Supreme Court considered this a virtue of categorizing claim construction as a matter of law: "treating interpretive issues as purely legal will promote (though it will not guarantee) intrajurisdictional certainty through the application of *stare decisis* on those questions not yet subject to interjurisdictional uniformity under the authority of the single appeals court." *Markman v. Westview Instruments, Inc.*, 517 U.S. 370, 391 (1996); *see also Visto Corp. v. Sproqit Techs., Inc.*, 445 F. Supp. 2d 1104, 1106 (N.D. Cal. 2006) (observing that "interjurisdictional uniformity" refers to claim constructions reviewed by the Federal Circuit).

A decision of a district court is not binding precedent on a different judicial district, the same judicial district, or even the same judge in a different case under the doctrine of stare decisis. Rather, stare decisis requires only that the later court encountering the issue give consideration and careful analysis to that sister court's decision where applicable to a similar fact pattern. See *Amgen, Inc. v. F. Hoffmann-La Roche Ltd.*, 494 F. Supp. 2d 54, 60 (D. Mass. 2007) (citing *United States v. Rodriguez-Pacheco*, 475 F.3d 434, 441 (1st Cir. 2007)); *Tex. Instruments, Inc. v. Linear Techs. Corp.*, 182 F. Supp. 2d 580, 589 (E.D. Tex. 2002); *cf. Finisar Corp. v. DirecTV Group, Inc.*, 523 F.3d 1323, 1329 (Fed. Cir. 2008) (noting that "in the interests of uniformity and correctness," the Federal Circuit "consults the claim analysis of different district courts on the identical terms in the context of the same patent.") Courts sometimes accord prior decisions from within their district somewhat greater consideration than those decided outside the district. *See, e.g.*, *Visto Corp. v. Sproqit Techs., Inc.*, 445 F. Supp. 2d 1104, 1107-08 (N.D. Cal. 2006) (noting that intra-judicial uniformity warrants an even higher level of deference); *Verizon Cal. Inc. v. Ronald A. Katz Tech. Licensing, P.A.*, 326 F. Supp. 2d 1060, 1069 (C.D. Cal. 2003).

Just as issue preclusion requires an issue to have been actually *litigated* in order for collateral estoppel to attach, stipulations of claim meaning may not be entitled to stare decisis effect "because it is only the judiciary—not the parties—that declares what the law is." *Amgen, Inc. v. F. Hoffmann-La Roche Ltd.*, 494 F. Supp. 2d 54, 70 (D. Mass. 2007). The court in that case noted, however, that "[s]uch agreements, of course, may, where appropriate, implicate judicial estoppel and, where a final judgment occurs, the doctrine of issue preclusion." Also as with issue preclusion, stare decisis applies only to rulings that were necessary to the decision rendered. *See Miken Composites, L.L.C. v. Wilson Sporting Goods Co.*, 515 F.3d 1331, 1338 n* (Fed. Cir. 2008); *Zenith Radio Corp. v. United States*, 783 F.2d 184, 187 (Fed. Cir. 1986) (holding that stare decisis applied where resolution of issue was a "necessary predicate" to earlier Federal Circuit ruling).

A distinct tension arises to the extent that courts look to prior *Markman* rulings under the doctrine of stare decisis in circumstances that do not satisfy the more exacting requirements of issue preclusion. In practice, courts have alleviated this strain by affording a party who did not participate in that earlier action a full and fair opportunity to be heard in the later proceeding. At the same time, the court can be mindful of prior rulings. *See Tex. Instruments, Inc. v. Linear Techs. Corp.*, 182 F. Supp. 2d 580, 590 (E.D. Tex. 2002).

5.4 Practical Tips for Claim Construction

5.4.1 Recognizing and Avoiding the Pitfalls of Sound Bite and "Cite" bite Advocacy

Patent law is plagued with a surfeit of quotations from Federal Circuit cases that appear to support almost any proposition. The sheer quantity of published opinions issued by the Federal Circuit over its twenty-five-year history is massive, and the cases frequently are technically demanding, which can obscure the context behind their legal rules. Moreover, important legal shifts over the Federal Circuit's history (most recently in *Phillips*) have rendered entire lines of authority obsolete. The result is that there is a huge trove of case law sound bites available to litigants that are no longer authoritative, but that are nonetheless cited routinely. This poses an added burden on the courts to recognize what principles are no longer good law. This subsection identifies commonly cited statements from prior cases that are no longer valid, or whose applicability has been sharply limited.

5.4.1.1 "Heavy Presumption of Ordinary Meaning" No Longer Applies

As discussed above, *Texas Digital* established a "heavy presumption" that the ordinary meaning of a claim terms applies, which is no longer valid under *Phillips*. This standard was routinely cited prior to *Phillips*, but has essentially dropped from the Federal Circuit's case law since 2004, when *Phillips* was pending.[9] Unfortunately, *Phillips* did not expressly abrogate the "heavy presumption" standard, and the lack of an express statement from the Federal Circuit disavowing this standard has allowed litigants to continue citing it. Notably, district courts are continuing

9. October 2004 was the last time the Federal Circuit cited this standard pre-*Phillips*. *See Fuji Photo Film Co., Ltd. v. Int'l Trade Com'n*, 386 F.3d 1095, 1105 (Fed. Cir. 2004). For over three years, this standard remained absent from Federal Circuit case law. One recent opinion, which we regard as am outlier, does cite the standard. *See Elbex Video, Ltd. v. Sensormatic Elecs. Corp.*, 508 F.3d 1366, 1371 (Fed. Cir. 2007).

to rely on this standard. Courts should no longer rely on this "heavy presumption." Rather, it is appropriate to depart from the "ordinary" meaning where the intrinsic evidence persuasively demonstrates "what the inventors actually invented and intended to envelop with the claim," without treating the ordinary meaning as a "presumption" that needs to be rebutted. *Phillips*, 415 F.3d at 1316 (quoting *Renishaw*, 158 F.3d at 1250).

5.4.1.2 "Presumption in Favor of Dictionary Definition" No Longer Applies

Texas Digital created a "presumption in favor of a dictionary definition," and held that dictionaries and other such outside sources should be consulted *before* interpreting the patent specification. That approach has been overruled by *Phillips*, which rejected *Texas Digital*'s undue emphasis on dictionaries as a source of ordinary meaning. *Phillips* does not offer a single formula for claim construction, but broadly instructs that claims must be interpreted consistent with a "full understanding of what the inventors actually invented and intended to envelop with the claim," and that the construction that "stays true to the claim language and most naturally aligns with the patent's description of the invention will be, in the end, the correct construction." *Phillips*, 415 F.3d at 1316. Thus, there is a renewed emphasis on construing claim terms consistent with their usage in the specification.

5.4.1.3 "Explicit Definition," "Disavowal," or "Disclaimer": Ordinary Meaning versus Prosecution Disclaimer

Prior to *Phillips*, the Federal Circuit had a high bar for construing a term in a manner different from the "ordinary and customary meaning" that the claim term has when read on its own. This prior approach was to find the ordinary and customary meaning of the claim term, based on its usage in the claims, and then ask whether there was a sufficient showing in the specification and prosecution history to construe that term differently. *See Texas Digital,* 308 F.3d at 1204. Overcoming the presumption of ordinary and customary meaning required showing that the patentee "has clearly set forth an explicit definition of the term different from its ordinary meaning," or that "the inventor has disavowed or disclaimed scope of coverage, by using words or expressions of manifest exclusion or restriction, representing a clear disavowal of claim scope." *Id.* at 1204.

While a showing that there is a "special definition" or "disavowal" or "disclaimer" remains a valid way to narrow the claim scope, that high bar no longer applies under *Phillips*. Rather, it is enough to demonstrate with reasonable clarity through the intrinsic evidence that the inventor understood a claim term to have a particular meaning, based on a "full understanding of what the inventors actually

invented and intended to envelop with the claim." That meaning is the proper construction, regardless of whether the specification reveals a "special definition" or "disavowal" or "disclaimer." This narrower meaning may apply where the inventors characterized "the invention" in a particular way, or distinguished the claimed invention from the prior art in a particular manner, or used a claim term with a uniform and consistent meaning, among other circumstances.

Note that the "clear disavowal" standard continues to apply in the context of finding a prosecution disclaimer. *Phillips* did not alter the legal standard for finding a prosecution history disclaimer, which continues to require "a clear and unmistakable disavowal of scope during prosecution." *Purdue Pharma L.P. v. Endo Pharms. Inc.*, 438 F.3d 1123, 1136 (Fed. Cir. 2006). Thus, the patentee may have intended a certain meaning to apply to a claim term in the patent specification. However, there may be evidence that the patentee was forced to surrender some of that desired claim scope during prosecution. Proving such surrender requires meeting the "clear disavowal" standard.

5.4.1.4 Reliance on Extrinsic Evidence Is Permissible but Cannot Override Intrinsic Evidence

District courts are still reluctant to consider extrinsic evidence, based on *Vitronics Corp. v. Conceptronic, Inc.*, 90 F.3d 1576, 1583 (Fed. Cir. 1996). That case discouraged trial courts from relying on extrinsic evidence where the intrinsic evidence was sufficiently clear to resolve the claim construction dispute. *Id.* at 1583 ("In most situations, an analysis of the intrinsic evidence alone will resolve any ambiguity in a disputed claim term. In such circumstances, it is improper to rely on extrinsic evidence."). *Vitronics* has been interpreted, widely and incorrectly, as a prohibition on extrinsic evidence. The Federal Circuit has consistently backed away from that interpretation, and *Phillips* should resolve any doubt that extrinsic evidence may be considered during claim construction. It is important to bear in mind, however, that extrinsic evidence cannot be relied upon to override contrary meaning reflected in the specification or other intrinsic evidence. *See Phillips*, 415 F.3d at 1317 (extrinsic evidence "less significant than the intrinsic record"); *id.* at 1318 (extrinsic evidence is generally "less reliable" than intrinsic evidence).

5.4.2 Checklist/Discussion Points for Claim Construction Hearing

The following summary list reflects key principles for the procedural and substantive elements of *Markman* law.

Procedural Aspects of Markman

- *Markman Timing*—Recommended approach is to allow sufficient pre-*Markman* discovery and allow identification of claim construction issues, but sufficient time post-*Markman* to allow *Markman* opinion to issue prior to expert reports.
- *Crystallizing Issues for Markman Hearing*—Recommended approach is to order a structured meet and confer process in advance of briefing, to avoid false disputes and ensure that genuine disputes are properly joined. Courts should use their discretion to prioritize the timing of (and possibly need for) construction of particular claim terms.
- *Consideration of Extrinsic Evidence*—Courts are free to consider extrinsic evidence in support of their *Markman* rulings, but it may not contradict the intrinsic evidence.

Substantive Aspects of *Markman*

- *Threshold Analysis*—The court should carefully assess what terms require interpretation and what deference, if any, to accord *Markman* rulings of the same patents and claim terms in prior cases.
- *Ordinary Meaning*—The "ordinary meaning" of a claim term is the baseline for claim construction, but there is no longer a "heavy presumption" that it applies. Rather, it is appropriate to depart from the "ordinary" meaning where the intrinsic evidence persuasively demonstrates "what the inventors actually invented and intended to envelop with the claim." *Phillips*, 415 F.3d at 1316.
- *Dictionaries*—There is no longer a "presumption in favor of a dictionary definition." Rather, the proper construction comes foremost from a context-dependent review of the patent and its prosecution history.
- *Departing from Ordinary Meaning*—It may be appropriate to construe a claim term differently than its ordinary meaning when the specification and prosecution history provide reasonable clarity of what the inventors actually intended to claim, including by characterizing the "present invention" to emphasize a particular feature, or distinguishing the prior art in a manner to highlight what the inventors viewed as their invention, or giving a consistent and uniform meaning to terms throughout the patent, among other scenarios.

Chapter 6
Summary Judgment

6.1 Managing the Summary Judgment Process
- **6.1.1 Summary Judgment and Claim Construction**
- **6.1.2 Recommended Dual-Track Approach to Summary Judgment**
  - **6.1.2.1 "First-Track" Summary Judgment Motions**
  - **6.1.2.2 "Second-Track" Summary Judgment Motions**
  - **6.1.2.3 Implementing a Dual-Track Approach to Summary Judgment**
  - **6.1.2.4 Recognizing First Track Summary Judgment Motions**
- **6.1.3 Summary Judgment Independent from Claim Construction (Off-Track)**
- **6.1.4 Streamlining the Summary Judgment Process**
  - **6.1.4.1 Recommended Approach: Letter Briefs Followed by Summary Judgment Motions**
  - **6.1.4.2 Limiting the Number of Summary Judgment Motions or the Number of Pages of Summary Judgment Briefing**
  - **6.1.4.3 Multiple Rounds of Summary Judgment Hearings**
- **6.1.5 The Summary Judgment Hearing**
  - **6.1.5.1 Length and Division of Time**
  - **6.1.5.2 Live Testimony**
  - **6.1.5.3 Graphics**
  - **6.1.5.4 Technology Tutorial**
- **6.1.6 Expert Declarations Filed in Connection with Summary Judgment Motions**
  - **6.1.6.1 Some Expert Testimony Cannot Defeat Summary Judgment**
    - **6.1.6.1.1 Testimony About Conclusions of Law**
    - **6.1.6.1.2 Conclusory Testimony**
    - **6.1.6.1.3 Testimony Contradicting Clear Disclosure of Prior Art**
    - **6.1.6.1.4 Testimony Contradicting Admissions of a Party**
  - **6.1.6.2 Legal Insufficiency of Expert Testimony**
  - **6.1.6.3 Expert Testimony Beyond the Scope of the Expert Report**
- **6.1.7 Narrowing Trial Issues Through Fed. R. Civ. P. 56(d)**

6.2 Substantive Issues Commonly Raised During Summary Judgment
- **6.2.1 Issues More Amenable to Summary Judgment**
  - **6.2.1.1 Validity**
    - **6.2.1.1.1 Patentable Subject Matter**
    - **6.2.1.1.2 Obviousness**
    - **6.2.1.1.3 Anticipation**
    - **6.2.1.1.3 Indefiniteness Under § 112, ¶ 6**
  - **6.2.1.2 Infringement**
    - **6.2.1.2.1 Absence of Literal Infringement**
    - **6.2.1.2.2 Whether Infringement Under the Doctrine of Equivalents Is Barred by *Festo***
    - **6.2.1.2.3 Whether Infringement Under the Doctrine of Equivalents Would Violate the *Wilson Sporting Goods* Doctrine**
    - **6.2.1.2.4 The Actions Accused of Infringement Did/Did Not Occur Within the United States**
    - **6.2.1.2.5 The Absence of Evidence of Direct Infringement Bars Claims of Indirect Infringement**
    - **6.2.1.2.6 "Divided" (Joint) Infringement: The Actions Accused of Infringement Are Made by Multiple Parties, Not Just the Accused Infringer**
  - **6.2.1.3 Damages**
  - **6.2.1.4 Willful Infringement**
- **6.2.2 Issues Less Amenable to Summary Judgment**

Appendix 6.1 Sample Standing Order Setting a Schedule for First-Track Summary Judgment Motions

Effective utilization of the summary judgment process is especially important in patent cases because they present so many complex issues. Summary judgment

can play a critical role in narrowing or simplifying the issues, thereby promoting settlement or simplifying the trial. On the other hand, the summary judgment process in a patent case can put a significant burden on the court, particularly if the parties file numerous, voluminous motions.

The first part of this chapter discusses areas in which courts have an opportunity to promote efficiency in the summary judgment process, and recommends some approaches found by courts to have been effective. It also discusses the types of motions that are more, and less, suited to resolution at the summary judgment stage. The second part of this chapter discusses various substantive issues that often arise during the course of the summary judgment process in patent cases.

6.1 Managing the Summary Judgment Process

In general, effective management of the summary judgment process in patent cases requires an understanding of the types of issues that drive most patent cases and how they typically play out in the life cycle of a case. It also requires the court to be assertive in case management.

As with any case, the timing of summary judgment motions can be critical. Hold summary judgment proceedings too early for a given case and questions of fact that would have been resolved at a later stage preclude summary judgment. Defer summary judgment too long in a given case and the parties and court waste time and resources on issues or cases that could have been resolved with little discovery.

6.1.1 Summary Judgment and Claim Construction

Claim construction plays a central role in scheduling and managing summary judgment motions. Generally, the pretrial issues requiring the largest investment of judicial resources in a patent case are claim construction and summary judgment. Furthermore, most of the weighty issues in a patent case—the technical aspects of infringement, and most allegations of invalidity—depend in some way on claim construction. As a result, summary judgment on the main issues in a patent case (infringement and validity) generally cannot be resolved without construing at least some disputed claim terms.

For this reason, most courts construe the key disputed claim terms before considering summary judgment motions. Attempting to tackle both claim construction and summary judgment at the same time is often seen as daunting, and taking them a step at a time can be the prudent course. This is especially true where a case presents multiple similar and interrelated claim construction disputes, which are generally resolved using similar evidence. Considerable efficiency results from resolving all the claim construction issues together in a single proceeding.

Resolving claim construction issues does not by itself resolve a case, however, unless it fosters settlement. Moreover, not all claim construction disputes are essential to a case—sometimes construing just a single disputed claim term is all that is needed to decide a case dispositive summary judgment motion. Thus, it can be inefficient to spend the judicial resources needed to resolve all of the claim construction disputes in a case before considering summary judgment motions that could obviate further trial court proceedings.

6.1.2 Recommended Dual-Track Approach to Summary Judgment

The tension between devoting judicial and party resources to claim construction while at the same time preparing for dispositive motions can be productively resolved by using a dual-track approach to the summary judgment process. On the first track, the fast-track, are motions that depend primarily or exclusively on claim construction. On the second track are motions that require resolution of substantial issues beyond claim construction. In rare cases, it may be worthwhile to consider a summary judgment outside either of these tracks—what we refer to as "off-track" summary judgment motions. Figure 6.1 illustrates the tracks along a time line.

Figure 6.1
Multi-Track MSJ Process for Patent Cases

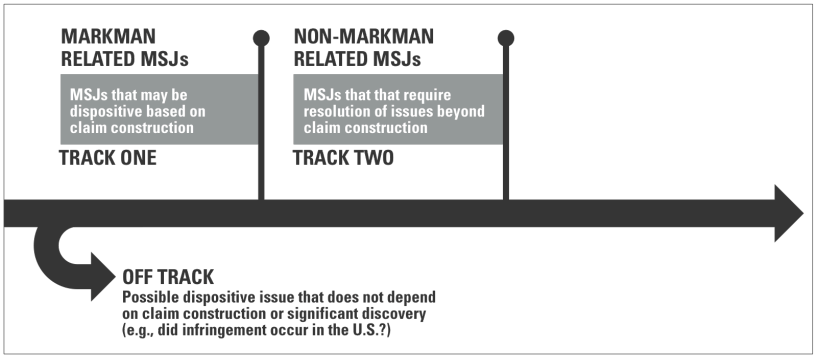

6.1.2.1 "First-Track" Summary Judgment Motions

"First-track" motions are typically non-infringement motions. For example, in *Planet Bingo v. Gametech Int'l*, 472 F.3d 1338 (Fed. Cir. 2006), the claims at issue required "establishing a predetermined combination as a winning combination." *Id.* at 1340. The accused bingo machines determined winning combinations after the bingo game began. The parties disputed whether this could be encom-

passed by the claim term "predetermined." The district court construed "predetermined" to mean a determination made before the game began. This precluded literal infringement. Based on this construction, and a finding that making a determination *after* the bingo game began could not be equivalent to making the determination *before* the game began, the district court granted summary judgment of non-infringement. The Federal Circuit affirmed. *See Planet Bingo v. Gametech Int'l. Inc.*, 472 F.3d 1338 (Fed. Cir. 2006). In this case, all that needed to be resolved was the construction of "predetermined" and the issue of what could be "equivalent" to "predetermined"— all other disputes, claim construction or otherwise, were mooted. *See also*, *e.g.*, *Schoenhaus v. Genesco, Inc.*, 440 F.3d 1354, 1356 (Fed. Cir. 2006) (affirming issuance of "carefully crafted summary judgment opinion" that "construed two limitations of claim 1 of the patent" in lieu of a claim construction order).

In most cases, first-track motions should be resolved as a part of, or in temporal proximity to, the claim construction process. Waiting to address such motions a significant time after claim construction eliminates the potential efficiency of resolving the case based on the construction of a single term or a small set of terms. If the court does not have first-track summary judgment issues properly before it during the claim construction process, the court may find itself addressing most or all of the claim construction disputes presented by the parties, only to later find that only one of those disputes actually mattered to the resolution of the case. Thus, while claim construction is often complex in and of itself, hearing a first-track summary judgment motion concurrently with claim construction has the potential to significantly reduce the expenditure of judicial and parties' resources by eliminating the need to consider all the claim construction issues.

Another possibility is to hear first-track motions before claim construction. This is generally not recommended, though it may make sense in some cases if the court is able to determine early in the case that there is a first-track motion with a strong chance of success. The reason this approach is generally not recommended is that it can disrupt and delay the case if the summary judgment motion is denied. Many districts have established local rules for patent cases that set up a structured series of disclosures leading up to claim construction briefing and a hearing. As discussed in Chapter 2, such procedures are recommended even if they are not required by the district's local rules. It generally does not make sense to postpone or interfere with this process just because one party argues that it has a strong first-track motion. Hearing first-track summary judgment motions with claim construction strikes a good balance. The case will remain on track even if the motion is denied or taken under submission at the hearing, and at the same time the summary judgment hearing has been held early enough that the court can avoid unnecessary effort. If the court decides to grant the motion after the hearing, it need only issue an opinion on the claim terms whose construction is necessary to resolve the summary judgment motion. If, on the other hand, the court decides

not to grant the motion, then the case can proceed like any other case with the issuance of a claim construction order.

Another benefit of hearing first-track summary judgment motions with claim construction is it can give the court important context for understanding the parties' claim construction disputes. Technically, the accused product is not a factor in claim construction. *Scripps Clinic & Research Found. v. Genentech, Inc.*, 927 F.2d 1565, 1580 (Fed. Cir. 1991) ("The words of the claims are construed independent of the accused product."). Nonetheless, the Federal Circuit has expressly directed district judges to construe claims with an understanding of the ultimate issues and disputes in a case. *Id.* ("Of course the particular accused product (or process) is kept in mind, for it is efficient to focus on the construction of only the disputed elements or limitations of the claims"). Indeed, it is "highly undesirable" to consider claim construction issues "without knowledge of the accused devices," *Mass. Inst. of Tech. v. Abacus Software*, 462 F.3d 1344, 1350 (Fed. Cir. 2006), because these provide the "proper context for an accurate claim construction." *Lava Trading, Inc. v. Sonic Trading Mgmt. LLC*, 445 F.3d 1348, 1350 (Fed. Cir. 2006). Summary judgment briefing can be an effective vehicle for revealing the motivations underlying claim construction disputes. Of course, information about the issues in the case need not be provided to the court by summary judgment motions. For example, the court can obtain this information through a tutorial, at a case-management conference, or through the claim construction briefing or hearing.

6.1.2.2 "Second-Track" Summary Judgment Motions

"Second-track" summary judgment motions involve substantial issues beyond how a claim is construed, and therefore should not normally be considered as part of the claim construction process. Claim construction issues are often interrelated and involve a common set of legal principles and evidence. It makes sense to consider them together. Second-track summary judgment motions involve different sets of legal principles and evidence in addition to underlying claim construction issues. Moreover, as discussed previously, most courts have found that it is best to resolve claim construction issues midway through a case, both to facilitate settlement and so that the parties can prepare for trial knowing what the claim construction is. *See* § 5.1.1. Unless the second-track motion is straightforward and unaffected by claim construction (for example, a challenge to standing, *see* § 2.2.1.1.2), making the effort to consider a second-track summary judgment motion before issuing a claim construction order diverts judicial resources from that goal.

6.1.2.3 Implementing a Dual-Track Approach to Summary Judgment

This dual-track approach to summary judgment in patent cases depends on the ability to distinguish between first-track and second-track motions and to enforce the distinction. It also requires the court to manage the case so that any first-track summary judgment motions are briefed prior to or simultaneous with the claim construction process, and so that Fed. R. Civ. P. 56(f) issues do not derail the court's ability to grant a meritorious first-track motion and dispose of the case early on.

The most essential component of this is providing early notice to the parties of the procedure the court intends to follow. The court should explain the first-track motion concept to the parties in a standing order for patent cases, at the initial case-management conference, or both.

There should also be a deadline in the case schedule for a summary judgment motion believed to be a first-track motion. To avoid unfairness and/or problems with Fed. R. Civ. P. 56(f), there should also be a deadline for providing notice to the other party of the basis for any planned first track motion, including at least the identity of any witnesses who will submit evidence in support of the motion. These deadlines could be the same, provided that the deadline is far enough in advance of the claim construction hearing to allow the opposing party time to perform reasonably necessary discovery, such as deposing the witnesses who submit declarations in support of the first track motion.

Courts also need to set expectations to avoid having the parties submit multiple first track summary judgment motions. One option is to limit each party to a single motion. Once the briefing is complete, the court could review it and decide whether to consider it along with claim construction. Another option is to require a party to obtain leave of court before filing a first track motion. For example, the court could require that a party wishing to file a first track motion submit a two- or three-page letter brief with the court within two weeks of submitting the Joint Claim Construction Statement required under some courts' Patent Local Rules. The letter brief would describe the proposed "first track" motion and why it should be heard with claim construction. The court could then evaluate how to proceed. This would also afford the opposing party notice of the basis of the motion, to avoid Fed. R. Civ. P. 56(f) problems.

Appendix 6.1 contains a sample standing order for first track summary judgment motions. It limits each party to a single first track summary judgment motion absent leave of court. It is designed to integrate with the Patent Local Rules originated by the Northern District of California, although it can be used in any district whether or not the district has adopted a version of those Patent Local Rules. If there are no Patent Local Rules, the court can simply remove the references in the sample order to those rules. The remaining text in the sample order stands on its own.

6.1.2.4 Recognizing First Track Summary Judgment Motions

Non-infringement motions based on a small set of claim terms are the most likely to be first track motions. This is because judgment of non-infringement is appropriate if any single claim limitation is not met. *See* § 11.4.1.4. Often, the same or similar claim limitations appear in each of the independent claims. If those claim limitations are not met, literal infringement (and quite possibly non-literal infringement) cannot be established and the case, or at least some aspects of it, is resolved. Dependent claims need not be considered because they cannot be infringed if the independent claims are not infringed.

While non-infringement motions are the most common, first-track motions can also include certain invalidity motions, particularly motions for indefiniteness or lack of written description under § 112, or motions asserting the claims are not patentable subject matter under § 101. Even enablement motions under § 112 can be amenable to early resolution. Whether a claim is patentable subject matter under § 101 is a question of law. *In re Bilski,* 545 F.3d 943, 951 (Fed. Cir. 2008) (§ 101 standard); *see also* § 11.3.1.3 *infra*. Enablement and indefiniteness are also both ultimately legal conclusions for the court, albeit based on underlying facts. *Warner-Lambert Co. v. Teva Pharms. USA, Inc.,* 418 F.3d 1326, 1337 (Fed. Cir. 2006) (enablement standard); *Datamize, LLC v. Plumtree Software,* 417 F.3d 1342 (Fed. Cir. 2005) (indefiniteness standard). While the issue of written description is a question of fact, a patent can nonetheless be held invalid "on its face" for lack of adequate written description. *Univ. of Rochester v. G.D. Searle & Co., Inc.,* 358 F.3d 916, 927 (Fed. Cir. 2004) (describing written description standard and listing cases where a patent was held invalid "on its face" under this standard). Importantly, enablement, indefiniteness, and written description are issues that often turn on the meaning of a single claim limitation that appears throughout the claims in dispute. For example, modifying the *Planet Bingo* facts slightly, the defendant could have argued that if "predetermined combination" was construed to include winning combinations generated after the bingo game began, the claim was not supported by the patent's written description. If the patent only described determining winning combinations before the game started, and emphasized the benefits of determining the combinations before the game started, the written description motion could be meritorious and would dispose of the case.

Similarly, motions that argue that claims are not patentable under 35 U.S.C. § 101 are often resolvable without claim construction. *See, e.g., Fort Properties, Inc. v. American Master Lease, LLC,* 2009 WL 249205 (C.D. Cal. Jan. 22 2009) (invalidating claims under § 101 without discussion of claim construction). Even if some claim construction is required, it may still make sense to consider a § 101 motion as a first-track motion. For example, one court granted summary judgment of invalidity under § 101 using the constructions proposed by the plaintiff, the non-moving party. *See CyberSource Corp. v. Retail Decisions, Inc.,* No. C-04-03268-

MHP (N.D. Cal. Mar. 27, 2009). *See* § 6.2.1.1.3 *infra*. It is possible, albeit unlikely, for virtually any infringement or validity motion to fall into this category. The key questions are how many disputes the court needs to resolve, and of what type. Normally, a motion based on anticipation or obviousness will not be a first track motion because to prove either, the moving must show that every limitation in every claim is present in the prior art. This typically gives rise to a host of disputes, at least some of which are not governed primarily by claim construction issues. Thus, these motions are normally not first-track motions. However, it is possible for a question of anticipation or obviousness to turn on a small number of issues that are manageable early on in the case. For example, if it is beyond reasonable dispute that the patented invention is a specific improvement on a specific prior art device, the validity of the patent may turn on whether the specific improvement is obvious. Now that the Supreme Court has emphasized that obviousness is a legal conclusion for the courts, it is much more likely that fact patterns will arise where even under the patentee's version of the facts, it is clear that the claimed inventions are obvious. *See KSR Int'l Co. v. Teleflex, Inc.,* 550 U.S. 398, 425, 127 S. Ct. 1727, 1745 (2007); *PharmaStem Therapeutics, Inc. v. ViaCell, Inc.,* 491 F.3d 1342, 1362 (Fed. Cir. 2007).

6.1.3 Summary Judgment Independent from Claim Construction (Off-Track)

The discussion above focuses on motions which depend on claim construction. In a patent case, this includes most case dispositive issues. However, there are issues that typically do not require the claims to be construed before the motion is decided. For example, a territoriality issue—did the alleged infringement occur "in the United States"?—often will not involve claim construction.

For such motions, the above first-track/second-track approach does not apply as directly. Still, it remains true that making the effort to consider a summary judgment motion before issuing a claim construction order diverts the resources of both the court and the parties from the goal of teeing up and resolving the claim construction issues by the mid-point in a case. *See* § 2.1.1. Thus, in general, considering an off-track summary judgment motion before claim construction may make sense if the issue is potentially dispositive of the case as a whole or of a significant issue or issues.

6.1.4 Streamlining the Summary Judgment Process

Whatever the timing of summary judgment, courts can employ various tools to streamline the process. Chart 6.1 summarizes the principle approaches.

Chart 6.1
Approaches to Streamlining the Summary Judgment Process

Approach	Advantages	Disadvantages
Letter briefs asking permission to file summary judgment motions	• The court has full view of the possible summary judgment issues and their potential to narrow the case. • The court saves time and effort by prohibiting the filing of weak motions.	• Slightly lengthens the summary judgment process. • The short summary contained in the letter briefing may give the court a distorted picture of the proposed motion.
Limiting the number of summary judgment motions or the total number of pages	• Forces the parties to focus and identify their best arguments to the court; reduces the burden on the court of ruling on a stack of motions.	• Discourages parties from bringing summary judgment motions earlier in the case. • Limits the court's opportunity to dispose of issues prior to trial and create a more manageable trial.
Multiple rounds of summary judgment motions	• May allow additional efficiency by narrowing the issues to be decided at any time.	• May increase the total number of motions filed and encourage parties to file motions on minor issues.

6.1.4.1 Recommended Approach: Letter Briefs Followed by Summary Judgment Motions

Some courts employ a pre-motion letter briefing process to limit the number of summary judgment motions filed by the parties. Each party is required to submit a letter brief summarizing each proposed motion. The court then holds a telephone hearing during which each of the proposed motions is discussed. After this hearing, the court identifies which of the motions may be filed. One recommended variation of this practice, which has also been used by courts, is to allow the parties to file one motion without leave, and to require leave of court for any motions beyond the first.

The obvious advantage of this approach is that it gives the court an overview of the possible summary judgment issues and their potential to narrow the case. This allows the court to manage its docket with a better understanding of the impact of its decisions. The court can tailor its limits on summary judgment motions to suit the needs of each particular case.

Disadvantages of this approach may include an increase in resources required to manage the case, a somewhat longer summary judgment process, and possible

distortion of complex issues by forcing the parties to unduly compress their arguments. However, compared to the benefit of not having to consider a large number of motions these risks are small, and a more flexible alternative allows the parties to file a single motion without leave of court. In many cases, one motion will be enough and the parties will be content to not file letter briefs requesting leave to file additional motions.

In general, if the parties have competent advocates, they should be able to convey enough information to the court in two to three pages and five minutes of oral argument to enable the court to evaluate whether the substance of a proposed motion justifies the effort of full briefing.

6.1.4.2 Limiting the Number of Summary Judgment Motions or the Number of Pages of Summary Judgment Briefing

Some courts limit the number of summary judgment motions the parties can bring during the life of a case or the number of pages of summary judgment briefing that can be filed.

If a court does this, or is considering doing this, it should inform the parties early in the case, ideally at the initial case-management conference, because this approach may affect the parties' litigation strategy and practice. This practice has the significant advantage of forcing the parties to focus on and identify their best arguments, and it can significantly reduce the burden on the court. On the other hand, limiting the number of summary judgment motions can reduce the chance for early disposition of the case. Similarly, it can limit the court's opportunity to create a more manageable dispute by early narrowing the issues. In general, this approach is not recommended because it lacks flexibility. A variation that limits the total number of pages of briefing that can be filed is preferable.

Some courts employ a variation of this approach in which they do not limit the number of summary judgment motions, but instead require all motions to be addressed in a single brief conforming to the usual page limits. This approach is not particularly effective in streamlining the summary judgment process. Because parties may elect to bring any number of motions, it does not necessarily reduce the number of issues that the court will have to decide. And by limiting each party to a single brief, it significantly reduces a party's ability to quote and discuss the importance of evidence supporting the motion. Thus, instead of easing the burden on the court, this approach often results in dense briefs that string-cite evidence, forcing the court to pick through voluminous evidence to reach the merits of the motion. The inefficiencies of this approach are most pronounced when a party brings two or three well-founded motions for summary judgment, but is not able to treat any one motion fully. Consequently, we recommend against this variation.

6.1.4.3 Multiple Rounds of Summary Judgment Hearings

It can be useful to allow or encourage several rounds of summary judgment hearings. This probably makes sense in larger cases, in cases where a large number of motions are filed, or in cases where the parties identify narrow summary judgment motions on issues that require little or no discovery early in the litigation. This approach is most effective where the first round of motions is focused on issues that have the potential to narrow significantly the issues in the case. Otherwise, the court may expend resources to address issues that would not have been raised later in the case. A drawback of this approach is that it may increase the total number of motions filed and encourage parties to file motions on minor issues.

6.1.5 The Summary Judgment Hearing

Hearings on motions for summary judgment in patent cases usually present the same issues as presented in other types of cases. But several issues—the length and division of time, live testimony, the use of graphics, and whether to hold a technology tutorial –raise distinctive concerns in patent cases.

Chart 6.2
Approaches to the Summary Judgment Hearing

Approach	Advantages	Disadvantages	Examples
Live testimony	• Affords the court to hear testimony focused on the issues on which the motion turns.	• Inconsistent with MSJ standard. • Time-consuming. • Invites cumulative testimony.	
Graphics	• May assist the court in understanding complex technical distinctions.	• Invites longer presentations. • Challenge to keeping precise record.	PowerPoint slides

6.1.5.1 Length and Division of Time

The length of time needed for a summary judgment motion varies widely depending on the court's preferences and the scope and nature of the issues at stake. As an example, a motion seeking summary judgment of infringement implicates a broad scope of issues and may require significantly more time than a motion for summary judgment of non-infringement, which might focus on the absence of a single claim limitation. Typically, whatever time the court allots to the hearing

should be divided equally between the parties, and each party should be free to elect how best to use it.

6.1.5.2 Live Testimony

The factual issues relevant to a motion for summary judgment are sufficiently settled before a motion is brought that live testimony during the hearing is rarely appropriate. It can be unduly time consuming and invite cumulative evidence. But it can be useful in limited circumstances where declarations submitted by the parties do not squarely address each other, creating the perception of a question of material fact when, in reality, one may not exist. In such circumstances, live testimony may allow the court to probe discrepancies in the testimony that may affect whether summary judgment is appropriate.

6.1.5.3 Graphics

Most courts permit the parties to use graphics, such as PowerPoint slides, during their presentations. This can be particularly helpful to the court in patent cases, where visual aids may assist the court in understanding nuanced technical issues. Such presentations tend to be most helpful when they present issues in a functional manner—i.e., through the use of graphical illustrations and charts. Where they merely repackage the arguments in briefs with bullet points, such presentations can be inefficient.

6.1.5.4 Technology Tutorial

Because the technology implicated by the patents-in-suit, accused products, and prior art is often complex and unfamiliar to the court, a technology tutorial may assist in clarifying the issues to be decided. Whether this should occur in conjunction with summary judgment will vary depending in part upon the timing of summary judgment relative to claim construction—where technology tutorials are most prevalent, *see* Chapter 5—and the court's needs. If the court held a tutorial in conjunction with a prior *Markman* hearing, it may not be necessary to hold a second one. But the court should consider carefully whether the scope of technical issues discussed at the *Markman* stage encompassed the technical information relevant to the summary judgment stage. It often does not because summary judgment frequently implicates a broader set of technical issues. If summary judgment is concurrent with, or precedes, claim construction, this counsels in favor of holding a tutorial in connection with the summary judgment hearing. The methodology of the tutorial can take various forms, including a neutral presentation by counsel, a presentation by each party's experts or by a technical advisor to

the court, and written submissions by the parties followed by a question-and-answer session. These options are discussed more fully in § 5.1.2.2.

6.1.6 Expert Declarations Filed in Connection with Summary Judgment Motions

Because summary judgment motions in patent cases will typically be both supported and opposed by expert declarations, a central issue in most patent summary judgment motions will be evaluating the extent to which expert declarations create (or fail to create) genuine issues of fact that preclude summary judgment.

6.1.6.1 Some Expert Testimony Cannot Defeat Summary Judgment

6.1.6.1.1 Testimony About Conclusions of Law

Expert opinions directed to a conclusion of law are insufficient to defeat summary judgment. *KSR Int'l Co. v. Teleflex, Inc.*, 127 S. Ct. 1727, 1745 (2007) ("To the extent the court understood the *Graham [v. John Deere]* approach to exclude the possibility of summary judgment when an expert provides a conclusory affidavit addressing the question of obviousness, it misunderstood the role expert testimony plays in the analysis.").

6.1.6.1.2 Conclusory Testimony

The conclusory testimony of an expert, at least when standing alone, is not sufficient to defeat summary judgment. *Telemac Cellular Corp. v. Topp Telecom, Inc.*, 247 F.3d 1316 (Fed. Cir. 2001) ("broad conclusory statements offered by Telemac's experts are not evidence and are not sufficient to establish a genuine issue of material fact"); *Arthur A. Collins, Inc. v. N. Telecom, Ltd.*, 216 F.3d 1042, 1046 (Fed. Cir. 2000); *In re Dembiczak*, 175 F.3d 994, 999 (Fed. Cir. 1999).

6.1.6.1.3 Testimony Contradicting Clear Disclosure of Prior Art

Expert testimony that purports to contradict the clear disclosure of a prior art reference is insufficient to defeat summary judgment. *Jamesbury Corp. v. Litton Indus. Prods. Inc.*, 756 F.2d 1556, 1563 (Fed. Cir. 1985) (overturning a jury verdict of anticipation), *overruled in part by A.C. Aukerman Co. v. R.L. Chaides Constr. Co.*, 960 F.2d 1020 (Fed. Cir. 1992).

6.1.6.1.4 Testimony Contradicting Admissions of a Party

In *PharmaStem Therapeutics, Inc. v. ViaCell, Inc.*, 491 F.3d 1342, 1362 (Fed. Cir. 2007), the Federal Circuit refused to give weight to expert testimony proffered by the patentee about the nature of the prior art that contradicted statements in the specification of the patent-in-suit about that art. As a result of these limitations, the mere existence of apparently conflicting expert testimony from both parties does not necessarily mean that questions of material fact preclude summary judgment. For additional limitations on expert testimony, see § 7.4.

6.1.6.2 Legal Insufficiency of Expert Testimony

Proffered expert testimony may also fail to navigate patent law's substantive requirements correctly, rendering it of little to no relevance. The most common failing in this regard concerns the timing of the substantive analysis. Whether a patent claim is obvious is measured at the time of invention. Thus, expert opinions about obviousness must focus on what would be known or obvious to a person of ordinary skill *at the time of invention*. But enablement is measured at the time the application was filed, *In re Wands*, 858 F.2d 731, 736-37 (Fed. Cir. 1988); infringement, including equivalency under the doctrine of equivalents, at the time of alleged infringement, *see*, *e.g.*, *Warner-Jenkinson Co., Inc. v. Hilton Davis Chem. Co.*, 520 U.S. 17, 37 (1997); and equivalency under § 112, ¶ 6, at the time the patent issued, *Al-Site Corp. v. VSI Int'l, Inc.*, 174 F.3d 1308, 1320 (Fed. Cir. 1999). An opinion based on an analysis that focuses on the wrong point in time does not address the substantive standard relevant to the motion. Likewise, an expert opinion about anticipation that does not address whether the asserted prior art reference is enabling may not satisfy the substantive standard. *See*, *e.g.*, *Forest Labs., Inc. v. Ivax Pharms., Inc.*, 501 F.3d 1263, 1268 (Fed. Cir. 2007). An opinion that fails to address the substantive standard may have little to no probative value. As a result, it may be appropriate to exclude the testimony under Fed. R. Evid. 402 and 702.

6.1.6.3 Expert Testimony Beyond the Scope of the Expert Report

In patent cases, parties commonly argue that expert testimony regarding summary judgment should be stricken or disallowed because it goes beyond the scope of the expert's reports. This arises in a number of contexts:

- A *Celotex* "failure of proof" argument for summary judgment, based on the absence of opinion or evidence in an expert report, *see*, *e.g.*, *Telemac Cellular Corp. v. Topp Telecom, Inc.*, 247 F.3d 1316 (Fed. Cir. 2001);

- An argument that a declaration opposing summary judgment should be stricken.
- Expert testimony through declaration that is contrary to deposition testimony.

The consequences of either allowing or disallowing expert testimony that is beyond the scope of the expert's report should be examined carefully. However, courts should keep in mind the Federal Circuit's clear support for allowing the district court discretion to make procedural rulings that are effectively case-dispositive. *See O2 Micro Int'l, Ltd. v. Monolithic Power Sys., Inc.*, 467 F.3d 1355, 1368-69 (Fed. Cir. 2006) (finding court did not abuse its discretion in excluding untimely expert reports). Less obviously, allowing an expert declaration to stand for a point that is outside the scope of the expert's report on the subject has the practical effect of granting a motion to serve a supplemental expert report. The scope of the trial will inevitably expand to include testimony on that new point. But, as discussed in § 7.5.2.3, allowing a supplemental expert report may also unfairly prejudice the party against whom it is offered by raising issues requiring a responsive expert supplementation. Because the substantive underpinnings of validity and infringement are intertwined, a supplemental expert report in the form of a declaration submitted in connection with a motion for summary judgment of non-infringement may justify a responsive supplementation not only on the issue of infringement but also on the issue of validity.

Unfortunately, courts often do not address this issue head-on. Faced with a request to strike an expert declaration filed in connection with summary judgment, courts commonly remain silent about the request to strike and simply decline to cite the declaration in the opinion. This practice should be avoided as it risks basing an important decision on an incomplete record and rewards a party that failed to proffer a proper, timely report with unfair advantage. This approach injects the additional opinions in the declaration into the case, but without any recognition by the court that this has occurred. The result is often that the party against whom they are offered has little or no opportunity to offer responsive expert opinions. Instead, courts should address the request to strike explicitly and either strike the new matter or recognize that the declaration is a supplemental expert report. If the court permits the supplementation, it should provide the receiving party with an opportunity to depose the expert on the supplemental opinions and to offer responsive expert testimony of its own. Section 7.5.2.3 explores this issue further.

6.1.7 Narrowing Trial Issues Through Fed. R. Civ. P. 56(d)

Even where summary judgment is not appropriate, summary judgment proceedings may nevertheless be helpful in simplifying a patent case for trial. Fed. R. Civ. P. 56(d) allows a court to issue an order "specifying the facts that appear without controversy" and therefore not requiring trial. This is particularly useful

for patent cases because many of the facts necessary to prove infringement or validity are often undisputed. For example, as discussed in § 11.4.1.4, infringement requires that each claim limitation be present in the accused device. Thus, a patentee must present evidence at trial corresponding to each claim limitation. But the accused infringer often disputes the presence of only a small subset of these claim elements. If the court can determine, based on the evidence presented at summary judgment, which limitations are undisputed, Fed. R. Civ. P. 56(d) permits it to narrow the infringement portion of the trial to only those elements in dispute. This can significantly simplify a trial.

Although a court should apply Fed. R. Civ. P. 56(d) wherever possible, it must do so carefully, considering the scope of the motion and the relative burdens of proof. The court should utilize this rule only where the issues have been joined fully in the summary judgment proceedings. For example, when an accused infringer cites the absence of only one claim limitation in its non-infringement summary judgment motion, it is not necessarily admitting that there are no disputes as to the other limitations. The accused infringer may simply be choosing to move for summary judgment on its strongest non-infringement argument. As another example, in some cases the party opposing the motion acknowledges in its briefing or oral argument that certain issues underlying the motion are not disputed. When this happens, a Fed. R. Civ. P. 56(d) order is appropriate.

6.2 Substantive Issues Commonly Raised During Summary Judgment

Some issues in patent cases are more amenable to summary judgment than others. In part, this is because some issues, such as infringement or anticipation, are factual and some, such as obviousness, are primarily legal in nature. There are also different standards of proof applied—infringement requires only a preponderance of the evidence, while invalidity requires clear and convincing proof. And some motions require a narrow scope of proof, while others require that the movant prove a much broader set of facts. For example, non-infringement is more likely to be amenable to summary judgment than infringement, because a patentee must show that each limitation of a claim is found in each accused device. Conversely, an accused infringer need only show the absence of a single limitation to avoid infringement. As a result, the accused infringer's burden on summary judgment is more likely to be satisfied, because a narrower scope of proof is required. Finally, some issues are more amenable to summary judgment because the underlying facts are not typically disputed; only the conclusions to be drawn from them are in dispute.

6.2.1 Issues More Amenable to Summary Judgment

This section explores the motions within validity, infringement, and damages that, in general, are more likely to be resolved at the summary judgment stage.

6.2.1.1 Validity

An accused infringer must prove invalidity by clear and convincing evidence. In general, this high burden makes summary judgment on validity issues more likely for patentees than accused infringers. But, as discussed below, the nature of several invalidity defenses often renders them amenable to summary judgment for either party.

6.2.1.1.1 Patentable Subject Matter

In *In re Bilski,* 545 F.3d 943 (Fed. Cir. 2008), the Federal Circuit re-adopted the "machine or transformation" test for patentable subject matter under 35 U.S.C. § 101. A claimed process is now patent-eligible only if: "(1) it is tied to a particular machine or apparatus, or (2) it transforms a particular article into a different state or thing." *Id.* at 954. The *Bilski* decision narrows the scope of patentable subject matter, meaning that there are now many patents that were issued by the PTO at a time when the standard for patentability was lower. Since the determination of whether the asserted claims are patentable is a question of law, *id.* at 951, this issue is relatively amenable to summary judgment. Several courts have taken notice and granted summary judgment of invalidity because the asserted claims are not drawn to patentable subject matter. *See CyberSource Corp. v. Retail Decisions, Inc.,* 04-CV-03268-MHP (C.D. Cal. 2009); *Classen Immunotherapies v. Biogen Idec*, 2008 WL 5273107 (Fed. Cir. 2008); *King Pharmaceuticals, Inc. v. Eon Labs, Inc.,* 593 F. Supp. 2d 501 (E.D.N.Y. 2009).

6.2.1.1.2 Obviousness

The Supreme Court's decision in *KSR Int'l Co. v. Teleflex, Inc.*, 550 U.S. 398, 27 S. Ct. 1727 (2007), suggests that the issue of obviousness may be appropriate for summary judgment in some circumstances. Obviousness is a question of law that is evaluated based on underlying factual questions about the level of skill in the art at the time the invention was made, the scope and content of the prior art, and the differences between the prior art and the asserted claim. *Id.* at 406 (*quoting Graham v. John Deere Co. of Kansas City*, 383 U.S. 1, 17-18 (1966)). These "*Graham* factors" also include secondary indicia, such as commercial success of the invention, a long-felt but unsolved need for the invention, and the failure of others, that may demonstrate that the claimed invention was non-obvious. *Graham*,

383 U.S. at 17-18. After the court has construed the claims, the parties typically dispute factual aspects of the *Graham* factors and the legal conclusion to be drawn from them. But such disputes, even if factual in nature, do not necessarily preclude summary judgment.

First, factual disputes about the *Graham* factors, even if heated, may not be material. To evaluate the materiality of these disputes, the court can simply assume that the non-movant's position about the factors is correct, draw inferences most favorable to that party in light of the assumed facts, and then evaluate the motion under that set of facts and inferences. For example, if an accused infringer moves for summary judgment of obviousness and it is apparent that there are factual disputes underlying the motion, the court can assume that the patentee's position on the *Graham* factors is correct and then evaluate obviousness. If the court concludes that the claim is obvious under the patentee's asserted facts, then the dispute about the underlying factors is not material and does not preclude summary judgment. Because obviousness is a question of law, the court does not have to conclude that "no reasonable juror" could find for the patentee, but only that there is clear and convincing evidence that the claimed invention was obvious under the patentee's asserted facts.

Second, *KSR* makes clear that conflicting expert testimony about the legal conclusions to be drawn from the underlying facts cannot defeat summary judgment. The court made this point explicitly: "To the extent the court understood the *Graham* approach to exclude the possibility of summary judgment when an expert provides a conclusory affidavit addressing the question of obviousness, it misunderstood the role expert testimony plays in the analysis." *Id.* at 426. As a question of law, the ultimate conclusion of obviousness or non-obviousness rests with the court. *Id.* Thus the court is *required* to ignore expert opinions about the ultimate legal issue, although it should consider opinions directed at the *Graham* factors themselves.

Procedurally, *KSR* makes summary judgment on the ultimate issue of obviousness easier for either party to obtain. In this regard, *KSR* is equally applicable to other questions of law, such as indefiniteness, and should be considered in those contexts as well. Substantively, *KSR* makes summary judgment of obviousness substantially more accessible for accused infringers than under the old rule, as discussed in § 11.3.5.2. As a result, courts can expect accused infringers to file—and win—more obviousness motions than they did before *KSR*.

6.2.1.1.3 Anticipation

To prove that a patent claim is anticipated, an accused infringer must show by clear and convincing evidence that a single prior art reference contains each limitation of that claim. Conversely, the patentee need show the absence of only one limitation from the prior art disclosure. The combination of this limited showing

and the high burden of proof on the accused infringer often combine to make this issue amenable to summary judgment.

6.2.1.1.3 Indefiniteness Under § 112, ¶ 6

Under § 112, ¶ 6, a patentee can draft its claims in "means-plus-function" form—e.g., claiming a "means for attaching" instead of claiming a nail—so long as it discloses in the specification structure that corresponds to the claimed function. If a patentee fails to disclose corresponding structure, the claim is indefinite. *Budde v. Harley-Davidson, Inc.*, 250 F.3d 1369, 1376 (Fed. Cir. 2001). Because the merits of this defense depend almost entirely on the disclosure of the specification of the patent-in-suit (though, in some cases, also upon expert testimony concerning the knowledge of one of ordinary skill in the art), the range of disputed facts is usually narrow. The significant dispute typically concerns the conclusions to be drawn from the underlying facts and is often expressed in competing expert declarations. Because indefiniteness is a question of law, such disputes between experts about the ultimate conclusion do not preclude summary judgment.

6.2.1.2 Infringement

As noted above, see § 6.2, infringement is generally more amenable to summary judgment than is invalidity because of its lower burden of proof (preponderance as opposed to "clear and convincing"). But because a patentee must show that every limitation of an asserted claim is present in the accused device, it is easier to demonstrate factual disputes to preclude summary judgment of infringement. And because the ultimate issue of infringement is one of fact, infringement issues that often require inferences to be drawn from the known facts, such as finding equivalency under § 112, ¶ 6 and the doctrine of equivalents, are typically not well-suited to summary judgment because all such inferences are drawn against the moving party. In contrast, *non*-infringement and various other issues are often amenable to summary judgment, as discussed below. Of course, in any given case these guidelines may not apply. For example, it is certainly possible that summary judgment of infringement could be appropriate if there are only a few issues in dispute and those issues are effectively resolved as part of claim construction.

6.2.1.2.1 Absence of Literal Infringement

An accused infringer need only show the absence of a single claim limitation from the accused device to avoid literal infringement. Because literal infringement can be defeated on such a narrow ground, motions for summary judgment of non-infringement are very common.

6.2.1.2.2 Whether Infringement Under the Doctrine of Equivalents Is Barred by *Festo*

Although infringement under the doctrine of equivalents is a factual question ill-suited to summary judgment, whether amendments of the patent during prosecution bar the patentee from asserting infringement under the doctrine of equivalents is a legal question well-suited to summary judgment. A patentee is barred from asserting infringement under the doctrine of equivalents as to a claim that was amended for reasons of patentability during prosecution unless the asserted equivalent was unforeseeable at the time of the amendment, the amendment bears no more than a tangential relation to the equivalent in question, or there is some other reason suggesting that the patentee could not reasonably have been expected to have described the equivalent. *Festo Corp. v. Shoketsu Kinzoku Kogyo Kabushiki Co., Ltd.*, 535 U.S. 722, 740-41 (2002); § 11.4.1.4.2.1.2. This inquiry depends largely on facts revealed by the prosecution history for the patent-in-suit. As a result, the court is often able to decide this issue at the summary judgment stage.

6.2.1.2.3 Whether Infringement Under the Doctrine of Equivalents Would Violate the *Wilson Sporting Goods* Doctrine

In *Wilson Sporting Goods Co. v. David Geoffrey & Associates*, the Federal Circuit held that there can be no infringement under the doctrine of equivalents if the asserted equivalents, combined with the remaining elements of the claim, encompass the prior art. 904 F.2d 677, 683 (Fed. Cir. 1990) (*overruled in part on other grounds* by *Cardinal Chem. Co. v. Morton Int'l*, 508 U.S. 83 (1993)); *see* § 11.4.1.4.2.1.3. For example, a patentee might assert that claim limitations 1-4 are met literally, and limitation 5 under the doctrine of equivalents. *Wilson Sporting Goods* precludes this argument if the prior art discloses literal limitations 1-4 combined with the element in the accused product that is asserted to be equivalent to claim limitation 5. Whether an asserted range of equivalents encompasses the prior art, thus barring the application of the doctrine as advanced by the patentee, is a question of law. *Id.* at 684. Because the court makes the ultimate decision on this issue, it is often amenable to resolution at the summary judgment stage.

6.2.1.2.4 The Actions Accused of Infringement Did/Did Not Occur Within the United States

Under § 271(a), making, using, selling, offering to sell, or importing an infringing product or method *within the United States* constitutes an act of infringement. A single transaction frequently implicates multiple jurisdictions. For example, a widget may be sold by a Tokyo company to an Indiana company pur-

suant to a contract negotiated in Oslo, with the widgets to be shipped to Indiana f.o.b. Taiwan. In these circumstances, parties often dispute whether the transaction occurred *within the United States* as required by section 271. Parties often style motions about this issue as motions in limine relating to damages. For example, the defendant may seek to exclude evidence supporting some of the alleged infringing sales because those sales allegedly occurred in a foreign country. But this issue is properly addressed as one of infringement. Because these motions are substantive, courts should treat them as motions for summary judgment, rather than as in limine motions, to ensure that the relevant issues are fully briefed and considered. *See* § 7.5.

Whether an allegedly infringing act occurred within, or outside of, the United States is a question of law. *See N. Am. Philips Corp. v. Lockheed Sanders, Inc.*, 35 F.3d 1576, 1579 (Fed. Cir. 1994). Whether acts occurring within the United States are sufficient to constitute a sale, offer to sell, use, manufacture, or importation is a question of fact. *See*, *e.g.*, *MEMC Elec. Materials v. Mitsubishi Materials Silicon Corp.*, 420 F.3d 1369, 1375 (Fed. Cir. 2005). Typically, the parties agree that a certain set of events took place in certain locations, but dispute the conclusions to be drawn from these events as they relate to infringement. As a result, both questions—locus of the acts and characterization of the acts—are often amenable to summary judgment.

6.2.1.2.5 The Absence of Evidence of Direct Infringement Bars Claims of Indirect Infringement

Under §§ 271(b) and (c), a party can be held liable for indirect infringement by contributing to a third party's infringement or by actively inducing a third party to infringe. To establish indirect infringement, the patentee must prove that specific acts of direct infringement by third parties occurred. *BMC Res., Inc. v. Paymentech, L.P.*, 498 F.3d 1373, 1380 (Fed. Cir. 2007). The analysis of direct infringement is the same for a third party as for a party and so is generally no more or less amenable to summary judgment. But, in some cases, the patentee does not focus its discovery efforts on gathering evidence of direct infringement by third parties. As a result, it is not uncommon for an accused infringer to bring a *Celotex* motion arguing that the patentee plaintiff can show no evidence of the direct infringement by third parties that is a predicate to a finding of indirect infringement against the defendant.

6.2.1.2.6 "Divided" (Joint) Infringement: The Actions Accused of Infringement Are Made by Multiple Parties, Not Just the Accused Infringer

The Federal Circuit has recently emphasized that where an accused infringer does not itself perform all the steps of an accused method, it cannot be liable for infringement unless it controls or directs performance of each step of the accused method. *Muniauction, Inc. v. Thomson Corp.*, 532 F.3d 1318 (Fed. Cir. 2008) (reversing a jury verdict of infringement); *BMC Resources, Inc*, 498 F.3d at 1380. Mere "arms-length cooperation" is not enough to show the necessary control or direction. *BMC Resources, Inc*, 498 F.3d at 1381.

When a party other than the accused infringer performs one or more of the steps in a method claim, the issue of whether that step is performed under the direction or control of the accused infringer may be amenable to summary judgment. The issue is so narrow in scope that the material facts may not be in dispute. Thus, summary judgment may be appropriate if those facts establish that a third party performed at least one step of the method outside the control or direction of the accused infringer.

6.2.1.3 Damages

Most substantive issues within the damages sphere require the factfinder to draw factual conclusions from disputed evidence and so are not particularly well-suited for resolution on summary judgment. But one issue—"marking"—is generally amenable to summary judgment.

Under § 287, damages against the infringer begin to accrue upon (a) actual notice of the patent or (b) upon constructive notice of the patent. When a patentee sells products embodying the invention, constructive notice can be established by marking those products with the patent number. But when method claims are asserted, the marking requirement may not apply and the patentee may be able to accrue damages from the time the patent issued. *See*, *e.g.*, *Hanson v. Alpine Ski Area, Inc.*, 718 F.2d 1075, 1082-83 (Fed. Cir. 1983). There is often little dispute about whether the patentee sells an embodying product, has marked that product with the patent number, or has provided actual notice of the patent to the accused infringer prior to suit. Thus, courts are not typically asked to address the factual question whether a patentee satisfied the marking requirement. Instead, the parties typically dispute whether, given the nature of the asserted and non-asserted claims in the patent-in-suit, marking was required at all. This is a narrow, legal issue that can often be decided at the summary judgment stage.

6.2.1.4 Willful Infringement

The Federal Circuit raised the standard for proving willful infringement to "objective recklessness" in *In re Seagate Technology, LLC*, 497 F.3d 1360 (Fed. Cir. 2007). Under this heightened standard, the absence of willful infringement may in many cases be amenable to summary adjudication, particularly where the accused infringer was not aware of the patent prior to the lawsuit being filed. Under *In re Seagate*, for there to be willful infringement the patentee must not only prove "an objectively high likelihood" of infringement, but "must also demonstrate that this objectively-defined risk . . . was either known or so obvious that it should have been known to the accused infringer." *Id.* at 1371. In many cases this standard will not be met even when all inferences are drawn in favor of the patentee, making summary adjudication of this issue appropriate.

6.2.2 Issues Less Amenable to Summary Judgment

The issues that are least amenable to summary judgment are typically those that have at least two of the following characteristics: (a) require a high burden of proof; (b) are questions of fact; (c) are broad issues requiring the movant to establish a wide range of facts; and (d) involve subjects about which the underlying facts are typically disputed.

For example, the contention that a patent claim is anticipated combines the high clear-and-convincing burden of proof with the requirement that the accused infringer establish that a single reference contains a disclosure of every limitation of the claim. This normally involves proving a wide range of facts in the face of vehement disagreement from the patentee, though of course in some cases anticipation may be an issue that is essentially resolved as a result of a broad claim construction. Infringement under the doctrine of equivalents has a different combination of characteristics: It is a factual question that requires the fact-finder to draw inferences from the underlying facts, and the parties typically rely heavily on conflicting expert opinions about whether the differences between the claim limitation and asserted equivalent are insubstantial. Again, however, in some cases the doctrine of equivalents may be an issue that is essentially resolved as a result of a broad claim construction.

The equitable issues of laches and estoppel typically involve heavily disputed underlying facts. The invalidity defenses of enablement and written description combine a high burden of proof with the fact that the parties typically rely heavily on conflicting expert testimony about what a person having ordinary skill in the art would have understood from the patent's disclosure. As a result of these characteristics, these issues are less amenable to summary judgment.

Another issue generally less amenable to summary judgment is a claim of inequitable conduct. The defense of inequitable conduct combines a high burden of

proof with two inquiries—"materiality" and "intent to deceive"—that normally involve factual disputes and depend significantly on inferences from those facts. On top of that, even after a threshold showing of both materiality and intent by clear and convincing evidence, "[t]he district court must still balance the equities to determine whether the applicant's conduct before the PTO was egregious enough to warrant holding the entire patent unenforceable." *Star Scientific, Inc. v. R.J. Reynolds Tobacco Co.*, 537 F.3d 1357, 1365 (Fed. Cir. 2008). Thus, it is rare that inequitable conduct can be affirmatively established on summary judgment.

Appendix 6.1
Sample Standing Order Setting a Schedule for First-Track Summary Judgment Motions

IN THE UNITED STATES DISTRICT COURT
FOR THE DISTRICT OF

COMPANY, INC,	§	
Plaintiff,	§	
vs.	§	**CASE NO. X**
ANOTHER COMPANY INC.,	§	
Defendant.	§	

STANDING ORDER RE: CLAIM CONSTRUCTION SCHEDULING

It is hereby **ORDERED** that the following deadlines are in effect for all patent infringement cases before the Court absent further order of this Court:

CC Hearing Date	**The Claim Construction Hearing set by the Court.** The Court will hear any Motion for Summary Judgment filed in compliance with the deadlines in this Order in conjunction with the Claim Construction Hearing or shortly thereafter. The Court will notify the parties if the hearing will be separate from the Claim Construction Hearing.
14 days prior to CC Hearing date	Parties to file a notice with the Court stating the estimated amount of time requested for the claim construction hearing. The Court will notify the parties if it is unable to accommodate this request. **[N.D.CA. Patent L.R. 4-5(c)]** - Reply brief regarding claim construction due from party claiming patent infringement. **Summary Judgment Reply due.** Reply brief due for any summary judgment motions to be heard with claim construction.
21 days prior to CC Hearing date	**[N.D.CA. Patent L.R. 4-5(b)]** Responsive brief regarding claim construction due from party defending against claim of patent infringement. **Discovery Deadline – Summary Judgment With Claim Construction.** The moving party shall complete all discovery relating to any summary judgment motion filed to be heard with claim construction, including any depositions of any witnesses, including experts, offering declarations in opposition to such summary judgment motions.

35 days prior to CC Hearing date	**[N.D.CA. Patent L.R. 4-5(a)]** Opening brief regarding claim construction due from party claiming patent infringement. **Summary Judgment Opposition Due**. Opposition brief due for any summary judgment motions to be heard with claim construction.
45 days prior to CC Hearing date	**Discovery Deadline – Opposition to Summary Judgment With Claim Construction.** The non-moving party shall complete all discovery relating to any summary judgment motion filed to be heard with claim construction, including any depositions of any witnesses, including experts, offering declarations in support of such summary judgment motions.
50 days prior to CC Hearing date	**[N.D.CA. Patent L.R. 4-4]** Discovery Deadline - Claim Construction Issues. The parties shall complete all discovery relating to claim construction, including any depositions with respect to claim construction of any witnesses, including experts.
75 days prior to CC Hearing date	**Motion For Summary Judgment Due.** Any summary judgment motions to be heard with claim construction must be filed.
90 days prior to CC Hearing date	**[N.D.CA. Patent L.R. 4-3(a)]** Joint Claim Construction Chart due. Parties shall jointly submit a claim construction chart that sets forth each party's proposed claim constructions in editable electronic format or in such other format as the Court may direct. The chart shall also contain an identification of all references from the specification or prosecution history that each party contends support its construction. **Notice of Intent To File Summary Judgment Motion Based On Claim Construction Due**. A party that believes summary judgment can be granted based in whole or in primary part on the resolution of a claim construction dispute, and that wishes to file a motion for summary judgment to be heard in conjunction with claim construction, shall file a notice with the Court. The notice shall be no longer than 3 pages and shall (1) identify the claim construction dispute on which the summary judgment motion depends and (2) provide a brief summary of the party's basis for believing that summary judgment can be granted based in whole or in primary part on resolution of that claim construction dispute. A party may not identify (or file) more than one summary judgment motion to be heard in conjunction with claim construction without leave of court. If a party wishes to obtain leave of court to file more than one motion, it must file a motion seeking leave no later than 35 days prior to this deadline.

Chapter 7
Pretrial Case Management

7.1 Pretrial Conference
- 7.1.1 Timing
- 7.1.2 Participation
- 7.1.3 The Pretrial Order
- 7.1.4 Motions at the Pretrial Conference

7.2 Trial and Disclosure Schedule

7.3 Jury Instructions
- 7.3.1 Preliminary Instructions
- 7.3.2 Final Instructions—Timing
- 7.3.3 Final Instructions—Substance
- 7.3.4 Final Instructions—Common Disputes
  - 7.3.4.1 Integration of Case-Specific Contentions
  - 7.3.4.2 Claim Construction Instruction
  - 7.3.4.3 The "Presumption" of Validity Instruction
  - 7.3.4.4 The Obviousness Instruction
    - 7.3.4.4.1 Background: Pre-*KSR* Obviousness Law and Jury Instructions
    - 7.3.4.4.2 Post-*KSR* Obviousness Law and Jury Instructions
  - 7.3.4.5 Willfulness
  - 7.3.4.6 Inducement of Infringement
  - 7.3.4.7 Damages

7.4 Substantive Limitations on Expert Testimony
- 7.4.1 The Role of Experts in Patent Cases
- 7.4.2 Timing and Procedure: When and How Should the Court Exercise Its Gatekeeping Role?
- 7.4.3 Specific Substantive Limitations on Expert Testimony
  - 7.4.3.1 Improper Subject Matter
    - 7.4.3.1.1 State of Mind of Another Person, Usually an Inventor, Prosecutor, or Examiner
    - 7.4.3.1.2 Matters of Law
  - 7.4.3.2 Inadequate Qualifications
  - 7.4.3.3 Unreliable Analysis
    - 7.4.3.3.1 Conclusory Expert Opinions
    - 7.4.3.3.2 Unreliability of the Methodology or Its Application
      - 7.4.3.3.2.1 Misapplication of the *Georgia-Pacific* Factors
        - 7.4.3.3.2.1.1 Consideration of Factors Not Specified in *Georgia-Pacific*
        - 7.4.3.3.2.1.2 Selective Use of the *GP* Factors
        - 7.4.3.3.2.1.3 Use of an Incorrect Date for the Hypothetical Negotiation
        - 7.4.3.3.2.1.4 Use of Facts that Post-Date the Hypothetical Negotiation
      - 7.4.3.3.2.2 Use of an Incorrect Base for Damages
- 7.4.4 Motions Seeking to Prevent Lay Witness Opinions and Expert Witness Fact Testimony

7.5 Managing Patent Trials through Motions In Limine
- 7.5.1 Maintaining the Integrity of the Infringement/Validity Framework
  - 7.5.1.1 Motion to Bar a Comparison Between the Accused Product and an Embodying Product (or Between Prior Art and an Embodying Product)
  - 7.5.1.2 Motion to Bar Presentation of Embodying Products as Physical Exhibits
  - 7.5.1.3 Motion to Bar Evidence that the Accused Infringer Has Patents of Its Own
  - 7.5.1.4 Motion to Bar Argument that Patent Is Not Infringed Because It Is Invalid
- 7.5.2 Untimely Disclosures
  - 7.5.2.1 Motion to Preclude Undisclosed Fact Witnesses
  - 7.5.2.2 Motion to Preclude Undisclosed Prior Art
  - 7.5.2.3 Motion to Preclude Untimely Expert Opinions
    - 7.5.2.3.1 Opinions Not Disclosed in Reports
    - 7.5.2.3.2 Affirmative Opinions Disclosed in Rebuttal Reports

7.5.2.3.3 Limit Experts to their Reports
7.5.3 Precluding Claims/Defenses
7.5.4 Miscellaneous Patent-Related Motions
7.5.4.1 Motion to Bar Evidence/Argument Inconsistent with Claim Construction
7.5.4.2 Motion to Preclude Reference to an Expert's Contrary Claim Construction Opinion
7.5.4.3 Motion to Bar Evidence/Argument About Dropped Claims/Patents
7.5.4.4 Motion to Bar Disclosure that the Patentee Seeks an Injunction
7.5.4.5 Motion to Preclude Reference to Related Proceedings in the Patent Office
7.5.4.6 Motion to Preclude Evidence Concerning Undisclosed Opinions of Counsel

Close judicial management of the preparations for trial is integral to ensuring smooth proceedings during trial. As discussed in previous chapters, early judicial management can help narrow the issues that require resolution by trial. There are many procedural and substantive trial issues that can be resolved in the weeks preceding trial to refine issues and avoid delay during trial. This chapter discusses the considerations that should be given to pretrial preparations to promote efficient proceedings during trial, with particular discussion of the patent case pretrial conference, jury instructions, limitations on expert testimony, and motions in limine. Note that in some cases, sound case management may require that some issues be addressed well *before* the pretrial conference.

7.1 Pretrial Conference

The complexity of patent cases creates a particular need for pretrial preparation to minimize jury down time and increase jury comprehension. The pretrial conference represents the final opportunity to anticipate and resolve problems that would otherwise interrupt and delay trial proceedings. Having an effective pretrial conference is best guaranteed by requiring counsel to confer on a series of issues and then identifying and briefing the areas of disagreement.

As will be apparent from the sample order that is provided as Appendix 7-1, most of these issues arise in any complex case. However, in patent litigation they can take on special dimensions. In this section, we explore the pretrial conference process.

7.1.1 Timing

The pretrial conference should be held sufficiently in advance of trial, but long enough after claim construction and dispositive motion practice so that the court and counsel have a good idea of the boundaries of the trial and the interplay of issues that may need to be tried. Usually the conference is set from 6 to 8 weeks before trial.

7.1.2 Participation

Because of the importance of the issues to be determined at the pretrial conference, the court should conduct this proceeding in person rather than telephonically. Lead trial counsel should be required to attend.

7.1.3 The Pretrial Order

The objective of the pretrial conference is to generate an order that will govern the issues for trial and establish the ground rules for the conduct of the trial. Because of the special issues that often arise in patent cases, it is helpful to provide counsel in advance with a draft form of order that leaves blanks where appropriate, effectively providing a checklist of issues to consider. The form should include provisions that reflect the court's typical view on many aspects of the trial. However, counsel should be allowed to suggest deviations from those typical procedures where circumstances warrant.

7.1.4 Motions at the Pretrial Conference

Patent cases are characterized by large numbers of motions directed at excluding or limiting the use of evidence, including *Daubert* motions attacking expert opinions. It is common practice, and very sensible, to resolve such issues substantially in advance of trial so that the parties return with their presentations appropriately honed in accordance with the court's limiting orders. The sample pretrial order includes instructions for identifying and briefing in limine motions. Of course, circumstances may justify additional such orders made during the trial; but frequently a great deal of delay and confusion can be avoided by making these determinations in advance. Doing so also can produce the collateral benefit of settlement, by giving the parties a clearer picture of what evidence will or will not be accepted. The sections that follow provide detailed advice on the most frequent pretrial motions directed at expert testimony and other evidence.

7.2 Trial and Disclosure Schedule

Before any trial can begin, the court and the parties must settle on the schedule governing trial proceedings. While the overall trial schedule can be determined at the pretrial conference, the exact process and order of witnesses typically evolves during trial as a result of adjustments to evidence admitted, refused, or withdrawn. Therefore, it is impractical to finalize and commit the parties to a complete witness schedule in advance. The court should, however, encourage the parties to stipulate to a protocol for disclosing witnesses and associated trial exhibits during trial.

As the parties are in a better position to determine how much time is needed to prepare cross-examinations and objections to exhibits, the court should allow the parties to stipulate to a mutually agreeable disclosure schedule. In a typical patent case, a one- or two-day advance disclosure of witnesses and exhibits usually suffices. For example, a party intending to call a witness on Monday would disclose the witness and the exhibits to be used with the witness by a specified time on Saturday. The non-disclosing party would identify any objections to the exhibits by the next day. Whether more or less time is appropriate depends upon the complexity of the particular case.

Any established protocol should also cover the disclosure of demonstrative exhibits that may be used with a particular witness. However, demonstratives should be disclosed with sufficient time to allow the opposing party to raise objections prior to the presentation to the jury.

7.3 Jury Instructions

7.3.1 Preliminary Instructions

Many jurors are called to service without much understanding of trial practice or the legal system. Their understanding of the patent system is usually particularly limited. The problem is exacerbated because unlike many other legal frameworks (such as negligence), principles of patent law often do not line up with jurors' moral or "common sense" reasoning, especially without explanation. For example, some find it illogical that a defendant can be liable even if it didn't know about a patent. Some wrongly assume that a defendant's product cannot infringe the plaintiff's patent if the defendant has its own patent. Some believe that a device that was not patented cannot be "prior art" to a patent.

It is therefore good practice to give the jury preliminary instructions regarding their duties and the trial process before the start of trial. Providing the jurors with a legal framework before the presentation of evidence will help them understand what information they should be considering once trial begins. Examples of useful preliminary instructions are included in many of the available model jury instructions. *See e.g.*, Federal Judiciary Center Benchbook for U.S. District Judges, Preliminary Jury Instructions in Civil Case; Fifth Circuit Pattern Jury Instructions—Civil (<http://www.lb5.uscourts.gov/juryinstructions/>); Eighth Circuit Manual of Model Jury Instructions (<http://www.juryinstructions.ca8.uscourts.gov/civil_instructions.htm>); Ninth Circuit Manual of Model Jury Instruction—Civil (<http://www.ce9.uscourts.gov/web/sdocuments.nsf/Civil%20Jury? OpenView>); Eleventh Circuit Pattern Jury Instructions—Civil (<http://www.ca11.uscourts.gov/documents/pdfs/civjury.pdf>). Preliminary instructions should, at a minimum, set forth the duty of the jury, explain what constitutes evidence, explain the varying burdens of proof in a civil trial, and outline trial proceedings. They should

also include a non-argumentative description of the technology involved, the accused products, and the patents.

Because jurors usually understand the patent system even less than they understand the general legal system, preliminary instructions should also include a short explanation of the patent system, the particular patents at issues, and an overview of the patent law applicable to the contentions of the case. *See* Model Patent Jury Instructions for the Northern District of California. The Federal Judicial Center has prepared a video that can take the place of preliminary patent jury instructions. The video, together with a sample mock patent, is designed to be shown to prospective jurors in patent trials and provides background information on what patents are, why they are needed, how inventors get them, the role of the PTO, and why disputes over patents arise. It should be displayed once at the beginning of the trial, and because it is intended only as an introduction, counsel should be admonished not to quote from it or display excerpts for the jury as part of their presentations. A more complete discussion of the use of the video is included in § 8.1.2.3.7.

In addition to the Federal Judicial Center video, preliminary instructions should include an instruction setting forth the court's construction of patent claim terms. The jurors should be instructed that they must accept the court's constructions and are not allowed to construe terms on their own. *See Structural Rubber Prods. Co. v. Park Rubber*, 749 F.2d 707, 723 (Fed. Cir. 1984).

7.3.2 Final Instructions—Timing

In addition to preliminary instructions, the court should also instruct the jurors before they begin deliberations. While the court has discretion to instruct the jury before or after closing arguments are given, it is usually preferred to give instructions before closing statements. Fed. R. Civ. P. 51, 1987 Advisory Committee Notes (delineating benefits of instructions before closing arguments). This is especially true in a patent case. Jurors are usually more focused and in a better position to listen to instructions before closing arguments. Jurors' understanding of the arguments advanced during closing statements is improved when they have been instructed on the law applicable to the case. Instructing the jury before closing argument can also lead to more effective argument by the parties. Closing arguments can be tailored to meet the specific language of the instructions, enabling the parties to highlight the significance of particular evidence. Thus, instructing the jury before closing argument is recommended.

If the jury will be instructed after closing argument, some of the benefits listed above can be retained if jury instructions are finalized before closing argument and provided to the parties. This allows the parties to tailor their closing arguments to the instructions that will be given, which is especially helpful to the jury. Thus, finalizing the instructions and providing them to the parties before closing is recommended if the court chooses to instruct the jury after closing arguments.

7.3.3 Final Instructions—Substance

The patent law is complex, and so, typically, are jury instructions in patent cases. Fortunately, several organizations and courts have prepared model patent jury instructions. They serve as useful resources on which the parties can base their proposed instructions. Model patent jury instructions are available at the websites of the American Intellectual Property Law Association, the Federal Circuit Bar Association, the District Court for the Northern District of California, and the District Court for the District of Delaware. See Appendix D for a list of links to patent jury instructions. The different model instructions do differ stylistically. Moreover, the patent law has changed considerably in important ways over time, and at any given time, some instructions may have been updated to reflect a recent Supreme Court or Federal Circuit decision when others have not. As of this writing, the most recently updated set of jury instructions is the set from the Northern District of California, which were revised effective November 29, 2007. This set is included in Appendix D.

Generally, it makes sense to start from one of these sets of model instructions and modify or add to it as needed to address the issue of a particular case. One approach is for the court to select the set of model jury instructions it prefers and require the parties to prepare proposed instructions based upon that set. This allows the court to become familiar with one set of instructions, while allowing the parties to propose changes based on changes in the law or the needs of the case. This approach has potential drawbacks, however, because some sets of model instructions do not address some issues, and as stated above, some sets of instructions will better reflect recent changes in the law. Another approach is to allow the parties to select which set of instructions makes the most sense to use as a model for a particular case. In general, wholesale mixing and matching of instructions from different sets should be avoided.

The parties also often amend instructions to highlight the law particularly relevant to the arguments they intend to advance during trial. Allowing them to revise the model instructions to the particulars of the case can lead to argumentative and objectionable instructions, however. It is usually helpful to require the parties to submit "redlines" showing how they have revised the model instructions and provide any authority justifying their revisions.

7.3.4 Final Instructions—Common Disputes

Experience has shown that many of the disputes over jury instructions arise frequently. This section discusses the most common disputes regarding jury instructions.

7.3.4.1 Integration of Case-Specific Contentions

Many disputes over jury instructions result from the integration of a party's particular contentions into model jury instructions. Such particularized jury instructions may or may not be helpful to the jury. Generally, the court should attempt to exclude argumentative statements proposed by either side from the jury instructions. The "redline" mentioned above—which will show where any alterations have been made—is particularly helpful in highlighting this issue.

7.3.4.2 Claim Construction Instruction

The instruction on claim construction is important and part of virtually every patent case. If the court has held a claim construction hearing and issued a claim construction order, those constructions should be restated as a jury instruction. The parties may not argue a contrary construction. One common problem is that in an effort to preserve their claim construction positions for appeal, parties will often re-argue rejected claim constructions during the process of drafting jury instructions. This is inefficient. The court should streamline this process by instructing the parties to put the claim construction order in the form of a jury instruction, and allowing them to reserve their objections to any constructions on the record. *See* § 5.1.6.

7.3.4.3 The "Presumption" of Validity Instruction

As most patent trials involve claims of invalidity, the patent owner will often try to incorporate into the instruction on invalidity a statement that patents are presumed to be valid. *See* § 282. The defendant usually objects.

There is now general agreement about how to resolve this dispute. The statutory presumption of validity underlies the requirement that invalidity be proven by clear and convincing evidence. *See, e.g.*, *Union Oil Co. of Cal. v. Atl. Richfield Co.*, 208 F.3d 989 (Fed. Cir. 2000), noting that the law requires proof by clear and convincing evidence because patents enjoy a presumption of validity); *Am. Hoist & Derrick Co. v. Sowa & Sons, Inc.*, 725 F.2d 1350, 1359 (Fed. Cir. 1984) (emphasizing that the burden of proof rests with the challenger).

Thus, it is now generally agreed that juries should be instructed as to the higher burden of proof required to prove invalidity, but should not be told that there is a presumption of validity, which would be redundant and likely confusing. As the Federal Circuit Bar Association Model Patent Jury Instructions explain, "instructing the jury on the presumption of validity in addition to informing it of the clear and convincing burden of proof may cause jury confusion as to its role in deciding invalidity." "NOTE" to Federal Circuit Bar Association Model Patent Jury Instructions, No. 10.1. The Northern District of California Model Patent Jury In-

structions and American Intellectual Property Law Association's Model Patent Jury Instructions also both omit any reference to the presumption of validity. *See also Chiron Corp. v. Genentech, Inc.*, 363 F.3d 1247, 1258-59 (Fed. Cir. 2004) (finding district court did not err in declining to instruct jury on the presumption of validity because the jury had applied the clear and convincing evidence standard); *Avia Group Int'l, Inc. v. L.A. Gear Cal., Inc.*, 853 F.2d 1557, 1562 (Fed. Cir. 1988) (the presumption of validity "does not constitute 'evidence' to be weighed against a challenger's evidence.").

7.3.4.4 The Obviousness Instruction

The Supreme Court's recent decision in *KSR International Co. v. Teleflex, Inc.*, 550 U.S. 398, 127 S. Ct. 1727 (2007) was a significant change in the law that has a significant direct effect on jury instructions. *KSR* reversed the Federal Circuit's requirement that the evidence contain a "teaching, motivation, or suggestion" to combine the prior art used to show obviousness. *KSR* emphasized the need for courts to apply an "expansive and flexible" common-sense approach in evaluating validity, rather than being constrained by the rigid requirement of a "motivation to combine." 127 S. Ct. at 1729.

KSR also re-emphasized the long-standing law that the question of obviousness is a legal question for the court. *Id.* at 1745-46. Prior to *KSR*, the obviousness inquiry under § 103 was generally treated as secondary to the anticipation analysis under § 102, and was generally submitted to the jury for resolution along with anticipation. Often, the verdict form did not even separate the questions of obviousness and anticipation, including instead a single yes/no box for the question of validity. *KSR*'s insistence that obviousness was a legal determination for the court—one that should be made by the court when the obviousness of the claim is "apparent" even despite disputes about underlying facts—calls that practice into doubt. *Cf. Agrizap, Inc. v. Woodstream Corp.*, 520 F.3d 1337, 1343 n.3 (Fed. Cir. 2008) ("While a special verdict that asks a jury whether a patent claim is obvious provides more insight than one which simply asks whether the patent is invalid, the former still does not provide any detail into the specific fact findings made by the jury"); *see also Richardson-Vicks Inc. v. Upjohn Co.*, 122 F.3d 1476, 1484-85 (Fed. Cir. 1997) (noting that the "preferred route [to make a jury verdict on obviousness more amenable to appellate review] would have been to submit the underlying factual issues to the jury in the form of a special verdict under rule 49(a)"); Paul J. Zegger et al., *The Paper Side of Jury Patent Trials: Jury Instructions, Special Verdict Forms, and Post-Trial Motions,* 910 PLI/PAT 701, 716 (2007) ("By compelling a jury to consider factual issues individually, special verdicts and interrogatories may improve the consistency of jury verdicts as well as the underlying decision-making processes that produce them.") This is reflected by the Northern District of California's model patent jury instructions, the only set of model patent

jury instructions that has been revised as of this writing to reflect the law established in *KSR*. The Northern District of California's model instructions provide two alternative model instructions on obviousness, one to be used when seeking an advisory verdict on the ultimate of question of obviousness, and one to be used when only seeking resolution of the relevant factual questions.

7.3.4.4.1 Background: Pre-*KSR* Obviousness Law and Jury Instructions

In 1966, in *Graham v. John Deere*, 383 U.S. 1, the Supreme Court laid out the basic test for obviousness that remains the law today. It held that:

> under § 103, the scope and content of the prior art are to be determined; differences between the prior art and the claims at issue are to be ascertained; and the level of ordinary skill in the pertinent art resolved. Against this background the obviousness or nonobviousness of the subject matter is determined. Such secondary considerations as commercial success, long felt but unsolved needs, failure of others, etc., might be utilized to give light to the circumstances surrounding the origin of the subject matter sought to be patented.

383 U.S. at 18. These three factual predicates, along with the "secondary considerations," are known as the *Graham* factors. Evaluation of each of the *Graham* factors is a question of fact.

Traditionally, the question of obviousness has been submitted to the jury with instructions to consider the Graham factors and reach a conclusion as to obviousness. An instruction on the "nexus" requirement for secondary considerations is also sometimes given. Secondary considerations only support nonobviousness if they are tied to the alleged invention (i.e., have a "nexus"). *See, e.g.*, *Ormco Corp. v. Align Tech., Inc.*, 463 F.3d 1299, 1311-1312 (Fed. Cir. 2006) (holding that if the feature responsible for a claimed invention's commercial success was in the prior art, that success is irrelevant for purposes of determining obviousness); *Dippin' Dots, Inc. v. Mosey*, 476 F.3d 1337, 1345 (Fed. Cir. 2007) (same). Because "nexus" is a legal question, an alternative to a "nexus" instruction is exclusion of "secondary considerations" evidence not shown to have the required "nexus."

7.3.4.4.2 Post-*KSR* Obviousness Law and Jury Instructions

Since *KSR* emphasized that obviousness is a legal determination for the court, the Federal Circuit has exhibited a much greater proclivity to find patents invalid under § 103. *See, e.g.*, *In re Trans Tex. Holdings Corp.*, 498 F.3d 1290 (Fed. Cir. 2007); *Pharmastem Therapeutics, Inc. v Viacell, Inc.*, 491 F.3d 1342 (Fed. Cir. 2007) (reversing denial of JMOL to find obviousness); *Leapfrog Enters., Inc. v.*

Fisher-Price, Inc., 485 F.3d 1157 (Fed. Cir. 2007) (affirming finding of obviousness after bench trial); *In re Icon Health & Fitness, Inc.*, 469 F.3d 1374 (Fed. Cir. 2007); *Frazier v. Layne Christensen Co.*, 239 F. Appx. 604 (Fed. Cir. 2007) (affirming JMOL of obviousness)(unpublished). The renewed emphasis on the role of the court casts doubt on the practice of submitting the ultimate question of obviousness to the jury. It may now be better practice to limit the jury's consideration of obviousness to the factual disputes as to the *Graham* factors. It is the court's responsibility to reach a conclusion on the ultimate issue of obviousness.

Of course, courts remain free to seek an advisory verdict from the jury. If the traditional advisory verdict approach is taken, however, courts should not rely on pre-*KSR* jury instructions. *KSR* was quite critical of pre-2007 Federal Circuit decisions in the area of obviousness and effected a substantial change in the law. Two sources of guidance for creating a post-*KSR* jury instruction for an advisory verdict on obviousness are recommended. The first is the Northern District of California's model instruction 4.3b, which is the only model instruction as of this writing that has been revised based on the *KSR* decision. It can be used as is. The second is the Patent Office's detailed set of guidelines describing how to evaluate obviousness under *KSR*. 72 Fed. Reg. 57526-57535 (Oct. 10, 2007). These guidelines explain the law in a more operational manner and provide seven different rationales that can be used to support a finding of obviousness as well as the factual elements needed to support each of the seven rationales. They also provide at least two examples of actual cases finding obviousness under each of the seven rationales. While the Patent Office's guidelines cannot be directly used as jury instructions, they are a useful resource for crafting instructions. Whatever instruction is adopted, it needs to reflect *KSR*'s mandate that an "expansive and flexible" approach be employed.

If the advisory verdict approach is taken, courts should carefully consider the structure of the verdict form. If the verdict form merely asks for the final conclusion of obviousness without specifying its underlying factual determinations, it can be difficult or impossible to understand what the advisory verdict implies. This can hinder the court's ability to perform its duty of reaching a conclusion regarding obviousness. Moreover, it can easily create a need for a new trial. While at the time of this writing it is still early in the post-*KSR* era, it seems that there is a substantial risk of a new trial if the jury's decisions on the *Graham* factors (the factual underpinnings of obviousness) cannot be discerned from the verdict. *See, e.g.*, *Agrizap, Inc. v. Woodstream Corp.*, 520 F.3d 1337, 1343 n.3 (Fed. Cir. 2008).

The question of obviousness is often essential to the judgment. Unless the evidence meets the judgment as a matter of law (JMOL) standard for finding obviousness or nonobviousness, resolution of the underlying factual disputes is necessary, and each party has a right to have a jury resolve such disputes if they are material. The losing party at trial will typically seek JMOL on the issue of obviousness, which joins the issue of how the jury resolved the material underlying factual dis-

putes. If the court then draws conclusions about how the underlying factual disputes were resolved, it runs the risk of having those conclusions challenged on Seventh Amendment grounds. Consider also the scenario where a jury finds that there is anticipation and obviousness, and either the district court or the Federal Circuit reverses the finding of anticipation because a specific limitation in one claim is not present in one of the references. At this point, with a single-question verdict form, it is not clear whether the jury's error on anticipation affects its conclusion as to obviousness. Avoiding these situations, in addition to simply helping the court perform its duty of drawing a legal conclusion as to obviousness, are good reasons for the recommendation in the Northern District of California's model verdict form that "the verdict form should require the jury's finding on each factual issue so that the trial judge may make the final determination on the obviousness question."

Requiring the jury to make specific findings on the *Graham* factors does, however, have drawbacks. The most serious is that it is likely to lead to a complex verdict form. This is apparent from the Northern District of California's model verdict form. Some courts may find that such a verdict form is simply too complex to be desirable, notwithstanding the risks discussed above.

Certainly, if a form like the Northern District of California's form is used, it needs to be available to the parties before closing to give the parties the opportunity to tell the jury how their arguments and positions connect to the verdict form. A possibility for simplifying the verdict form used to ask the jury to make specific findings as to the *Graham* factors is asking only about the factors where the court believes there is a *material* dispute. While this could simplify the form, it poses the same type of new trial risk described above. It may be better simply to urge the parties to reach agreement on what the material disputes are. This is the approach contemplated by the Northern District of California's model form.

7.3.4.5 Willfulness

In August 2007, the Federal Circuit's en banc decision in *In re Seagate Tech., LLC*, 497 F.3d 1360 (Fed. Cir. 2007), abolished the standard for willful infringement that had been established in 1983 in *Underwater Devices Inc. v. Morrison-Knudsen Co.*, 717 F.2d 1380 (Fed. Cir. 1983). *Seagate* established a new standard for willful infringement, based on the notion of "objective recklessness." *Seagate* also established a new two-part test for assessing whether willful infringement occurred. Obviously, any jury instruction on wilfulness must follow the new test set forth in *Seagate*. That test is as follows:

A "patentee must show by clear and convincing evidence that the infringer acted despite an objectively high likelihood that its actions constituted infringement of a valid patent." *In re Seagate*, 497 F.3d at 1371.

"If this threshold objective standard is satisfied, the patentee must also demonstrate that this objectively-defined risk . . . was either known or so obvious that it should have been known to the accused infringer." *Id.*

As of the time of this writing, the Northern District of California's model jury instructions are the only set of model instructions that have been updated to reflect the Federal Circuit's en banc ruling in *Seagate*. Accordingly, it is recommended that courts use that instruction, or a modified version of it, when charging the jury on willfulness.

One dispute that frequently arose in the past in the context of a willfulness jury instruction is whether the jury could be instructed to infer or presume anything from an accused infringer's failure to obtain an opinion of counsel, or relatedly, from an accused infringer's failure to waive privilege and present an opinion of counsel at trial. Those disputes should no longer arise. The idea that an adverse inference could be drawn from a failure to present an opinion of counsel at trial rested on the old "affirmative duty of due care" standard established in *Underwater Devices*. *See Knorr-Bremse Systeme Fuer Nutzfahrzeuge GmbH v. Dana Corp.*, 383 F.3d 1337, 1345 (Fed. Cir. 2004) (en banc). This standard was overruled in *Seagate*. Indeed, the *Seagate* court emphasized that "there is no affirmative obligation to obtain opinion of counsel." 497 F.3d at 1371. Furthermore, the first part of the new *Seagate* test is objective, and the accused infringer's state of mind is irrelevant. *Id*. Thus, it is not appropriate to instruct the jury to infer anything from an accused infringer's failure to present an opinion of counsel at trial.

7.3.4.6 Inducement of Infringement

In 2006, taking a cue from the Supreme Court's *Grokster* decision, the Federal Circuit resolved a long-standing ambiguity in its case law regarding indirect infringement and held en banc that proving inducement of infringement requires proving that the accused infringer "knew or should have known his actions would induce actual infringements." *DSU Med. Corp. v. JMS Co.*, 471 F.3d 1293, 1304-06 (Fed. Cir. 2006) (en banc) (referring to *Metro-Goldwyn-Mayer Studios Inc. v. Grokster, Ltd.*, 545 U.S. 913, 936 (2005)). This standard requires proving that the alleged infringer had a specific intent to induce acts it knew or should have known were infringing, as opposed to simply having the intent to induce acts a jury later concluded were infringing. The Federal Circuit also explained an important corollary principle: "the requirement that the alleged infringer knew or should have known his actions would induce actual infringement necessarily includes the requirement that he or she knew of the patent." *DSU Med. Corp.*, 471 F.3d at 1304.

As of the time of this writing, the Northern District of California's model jury instructions are the only set of model instructions that have been updated to reflect the Federal Circuit's en banc ruling in *DSU*. Accordingly, it is recommended

that courts use that instruction, or a modified version of it, when charging the jury on inducement of infringement.

7.3.4.7 Damages

One of the most vexing issues in patent law today relates to the proper measure of damages. Crafting an appropriate jury instruction on compensatory damages for patent infringement is difficult. The first paragraph of § 284 provides that "the court shall award the claimant damages *adequate to compensate* for the infringement but in no event less than a reasonable royalty for the use made of the invention by the infringer . . ." (emphasis added). Thus, this provision aims to put the patent holder in the financial position it would have enjoyed but for the infringement. It calls upon the court to determine the patent holder's lost profits. As the Supreme Court has stated, the question to be asked is: "Had the infringer not infringed, what would the patent holder . . . have made?" *Aro Mfg. Co. v. Convertible Top Replacement Co.*, 377 U.S. 476, 507 (1964); *see also Pall Corp. v. Micron Separations, Inc.*, 66 F.3d 1211, 1223 (Fed. Cir. 1995) ("the purpose of compensatory damages is not to punish the infringer, but to make the patentee whole");[1] *State Indus., Inc. v. Mor-Flo Indus., Inc.*, 883 F.2d 1573, 1577 (Fed. Cir. 1989) (damages shall compensate the patentee for its pecuniary loss because of the infringement).

In the context of manufacturing patentees, compensatory damages can include: lost direct sales; price erosion (lost profits due to the lower price resulting from competition from the infringer); increased costs; and lost "convoyed sales"—parts, accessories, and repair or maintenance services that are functionally related to the patented products. *See generally* § 11.4.3.2. The Federal Circuit has developed exacting standards of proof for lost profits. To establish lost sales, the patent holder must ordinarily prove demand for the patented product, absence of acceptable non-infringing substitutes, manufacturing and marketing capability to exploit the demand, and the amount of per-unit profit. *See Rite-Hite Corp. v. Kelley Co.*, 56 F.3d 1358, 1545 (Fed Cir. 1995) (en banc) (endorsing the test articulated in *Panduit Corp. v. Stahlin Bros. Fibre Works, Inc.*, 575 F.2d 1152 (6th Cir. 1978)). Under the "entire market value rule," the patent holder is entitled to recover "damages based on the value of the entire apparatus containing several features, where the patent related feature is the basis for customer demand." See *State In-*

1. Pecuniary damages are not meant to punish for infringement because treble damages are available for punishing willful infringement. The second paragraph of § 284 provides that "the court may increase the damages up to three times the amount found or assesses." Such increased damages are determined in the discretion of the court based upon a finding of willful infringement. *See* § 11.4.3.2.2.

dustries, 883 F.2d at 1580; *accord TWM Mfg. Co. v. Dura Corp.*, 789 F.2d 895, 901 (Fed. Cir. 1986); *King Instrument Corp. v. Otari Corp.*, 767 F.2d 853, 865 (Fed. Cir. 1985); *Kori Corp. v. Wilco Marsh Buggies & Draglines, Inc.*, 761 F.2d 649, 656 (Fed. Cir. 1985).

Due to relatively strict standards of proof, lost profits can be difficult to establish in practice. Moreover, non-manufacturing entities will not be able to prove lost sales. Their injury is better characterized as lost licensing revenue. Thus, as an alternative to determining lost profits, § 284 sets a floor for compensatory damages: "in no event [shall the compensatory award be] less than a reasonable royalty for the use made of the invention by the infringer."

In contrast to the exacting "lost profits" standards, the reasonable royalty jurisprudence is less well developed and more open-ended. In a typical case, the parties will put forward economic experts to opine on the payment that would have resulted from a hypothetical arms-length negotiation between the patent holder and the infringer prior to the infringing activity based upon the assumptions that the patent was valid (and would be infringed by the defendant's conduct) and the parties were truly willing and able to negotiate a license. Their testimony would examine the wide range of factors set forth in *Georgia-Pacific Corp. v. U.S. Plywood Corp.*, 318 F. Supp. 1116 (S.D.N.Y. 1970). In theory, reasonable royalty testimony should establish three items: (1) the date of the hypothetical negotiation and when the royalty obligation begins, (2) the reasonable royalty rate per unit (or lump sum amount, where appropriate), and (3) the "royalty base," or revenue to which the royalty rate must be applied.2

An increasingly critical factor in the reasonable royalty determination is the royalty base against which the royalty rate is applied. In cases in which the patented technology represents the primary basis for demand for the defendant's infringing product, such as a pharmaceutical case in which the patent claims a new drug, the reasonable royalty appropriately extends to the accused product's entire revenue. In cases where the patent covers only one component of a multi-component product, such as one feature of a complex microcomputer, the reasonable royalty determination requires much greater care to ensure that the damage award measures the harm to the patent holder attributable to the infringing activity and not the contribution from other components of the product, the defendant's good will in the marketplace, and other factors unrelated to the patent.

Even in cases in which the accused device incorporates many components beyond the patented technology, patent holders will typically advocate using the en-

2. Not all royalty agreements require a rate per unit sold. Some royalty agreements require a fixed payment per unit of time. Such agreements trade flexibility for a guaranteed income stream. They can also be easier to administer and audit. In some fields, such agreements are more common and may provide the basis for an alternative royalty rate calculation.

tire market value of the defendant's product as the baseline for the reasonable royalty determination. They will request a general instruction indicating that the patent holder is entitled to a reasonable royalty based upon the list of *Georgia-Pacific* factors, leaving the jury to resolve the battle of the economic experts. This approach, however, risks placing undue importance on the role of the patented technology in suit relative to alternatives to the patented technology available to the defendant at the time that the infringement occurred as well as the value of other components in the accused device (and market demand considerations) to the overall market value of the accused device. It can lead to results that defy the economic logic undergirding real-world licensing negotiations.

The Federal Circuit has recognized the relevance of non-infringing alternatives in the context of reasonable royalty determinations:

> Shell also urges that a reasonable royalty may not exceed the cost savings between its proposed non-infringing alternative installation . . . and the patented method. . . . Upon remand, the district court is free to entertain additional evidence by the parties on this fact issue in its re-determination of the damage award. The trial court may also consider any other evidence about non-infringing alternatives.

Riles v. Shell Exploration & Prod. Co., 298 F.3d 1302, 1313 (Fed. Cir. 2002). Furthermore, the *Georgia-Pacific* multi-factor test expressly includes consideration of the value of other components in the accused device to the overall market value of the accused device: "The portion of the realizable profit that should be credited to the invention as distinguished from non-patented elements, the manufacturing process, business risks, or significant features or improvements add by the infringer." *Georgia-Pacific Corp.*, 318 F. Supp. at 1120 (factor 13). Yet these critical considerations can be difficult for a jury to appreciate in the context of the long *Georgia-Pacific* list of factors.

The following instruction more appropriately characterizes the considerations bearing on the determination of a reasonable royalty in the context of multi-component product cases:

> [Patent holder] claims a reasonable royalty based on [alleged infringer's] sales of the [accused device/system] rather than sales of the [component] in the [accused device/system]. In these circumstances, a reasonable royalty should reflect the portion of the revenue from sales of the [accused device/system] that result from the improvement provided by the ['xxx] patent over alternatives to the patented technology available to the [alleged infringer] at the time that the infringement began. Furthermore, the reasonable royalty should distinguish between the portion of the revenue earned from the [accused device/system] that is attributable to the presence of the patented improvement and the portion of the revenue earned from the [accused device/system] attributable to its other patented or unpatented components or features.

Where the patentee has claimed both a component and the previously known apparatus or system in which it is used, the instruction should direct the jury to the patented improvement, as explained typically in the patent specification or prosecution history.

These more detailed instructions should augment the court's general instructions regarding reasonable royalty. *See, e.g.*, Model Patent Jury Instructions for the Northern District of California, Instruction 5.8 (Reasonable Royalty—Definition) (Nov. 29, 2007). We note that these more specific instructions for consideration in assessing damages for multi-component, multi-feature, and multi-"property" (as in multi-"characteristic") contexts have not been formally adopted in any model jury instructions. Nonetheless, they comport with general principles of damages apportionment law and the specific concerns emerging in patent cases involving accused devices incorporating multiple technologies and features. As the Supreme Court recognized long ago, it would be "very grave error to instruct a jury 'that as to the measure of damages the same rule is to govern, whether the patent covers an entire machine or an improvement on a machine.'" *Seymore v. McCormick*, 57 U.S. 480, 491 (1853); *see also Westinghouse Elec. & Mfg. Co. v. Wagner Co.*, 225 U.S. 604, 614-15 (1912) ("[The] invention may have been used in combination with valuable improvements made, or other patents appropriated by the infringer, and each may have jointly, but unequally contributed to the profits. In such case, if plaintiff's patent only created a part of the profits, he is only entitled to recover that part of the net gains."); *Garretson v. Clark*, 111 U.S. 120, 121 (1884) ("When a patent is for an improvement, and not for an entirely new machine or contrivance, the patentee must show in what particulars his improvement has added to the usefulness of the machine or contrivance. He must separate its results distinctly from those of the other parts, so that the benefits derived from it may be distinctly seen and appreciated. . . . 'the patentee . . . must in every case give evidence tending to separate or apportion the defendant's profits and the patentee's damages between the patented feature and the unpatented features, and such evidence must be reliable and tangible, and not conjectural or speculative; or he must show, by equally reliable and satisfactory evidence, that the profits and damages are to be calculated on the whole machine, for the reason that the entire value of the whole machine, as a marketable article, is properly and legally attributable to the patented feature.'" (quoting the lower court)).

Consistent with this standard, courts should afford defendants adequate leeway to offer evidence relating to prior judgments or to licenses covering attributes of the accused product not covered by the patent(s) in suit. Thus, if the defendant has licensed other technologies in order to bring the accused product to market, then such licenses have bearing on the relative value of the accused product attributable to the patent(s) in suit. Courts should also permit introduction of evidence relating to the value of different components of an accused device to consumers of the product. This can come in the form of direct testimony of customers, survey evi-

dence, and expert testimony from marketing professionals and economists. Such evidence directly addresses factor 13 of the *Georgia-Pacific* test and helps to determine whether the patented technology in suit or other components or factors are driving demand for the accused product.

7.4 Substantive Limitations on Expert Testimony

Critical to managing a patent trial is the court's ability to control expert testimony. Of course, expert testimony of various forms is used in a variety of cases, and hence judges are familiar with both the concerns and the safeguards reflected in Federal Rule of Evidence 702 and the Supreme Court's *Daubert* decision. But patent cases present special challenges for at least three reasons. First, because the factual evidence is often technically complex and difficult to understand, juries may place undue weight on expert testimony, especially when it simplifies (or purports to simplify) the issues that the jury has to decide. Second, many of the legal tests used to evaluate liability and damages incorporate—expressly or implicitly—concepts that largely, if not exclusively, depend upon expert testimony. Thus, experts are aggrandized in patent cases in ways not typical of other types of litigation. Finally, as discussed more fully below, the role that experts play in patent cases does not always fit squarely within the Fed. R. Evid. 702/*Daubert* framework. Consequently, managing the scope and content of the experts' testimony is a critical component of trial management. This section explores issues that courts are likely to confront when evaluating the proper substantive limits of expert testimony in patent cases.

7.4.1 The Role of Experts in Patent Cases

Expert testimony in patent cases may be categorized into at least two distinct types. One, common to most other types of litigation, involves applying an accepted technical or scientific methodology to facts established during the trial to reach conclusions about factual issues. An expert might testify, for example, about the results of her analysis to determine the chemical composition of the accused product. Because this type of testimony is directed to an analysis that the expert regularly performs outside of a litigation context, it falls squarely within the Fed. R. Evid. 702/*Daubert* framework. Consequently, it presents few distinctive or novel issues and should be familiar to the court.

A second type of testimony presents more challenges. In patent cases, an expert is often asked to use her scientific, technical, or specialized knowledge to evaluate a hypothetical legal construct. For example:

- Who is a "person having ordinary skill in the art"?

- Would a "person having ordinary skill in the art" believe at the time of alleged infringement that differences between the patent claim and the accused product are "insubstantial"?
- At the time the patent application was originally filed, would a "person having ordinary skill in the art" have had a motivation to combine known ideas to create the claimed invention? (Note that, although a patent challenger is not required to show that one of ordinary skill in the art would have had a specific motivation to combine prior art references, such a showing may be helpful to the obviousness analysis. *See KSR Int'l Co. v. Teleflex, Inc.*, 550 U.S. 398, 127 S. Ct. 1727, 1741 (2007); § 11.3.5.2.)
- What royalty rate would the patentee and the infringer have agreed upon had they participated in a negotiation at the time of first infringement knowing that the patent was valid and infringed?

Obviously, it is more difficult for a court to perform its gatekeeping function effectively when this type of testimony is at issue. Because it reflects a hypothetical legal construct, it necessarily departs from the type of peer-reviewed, generally accepted methodology contemplated by Fed. R. Evid. 702 and *Daubert*. Yet, this second type of expert testimony forms the bulk of expert testimony in patent cases. As a result, the majority of issues discussed in this section arise from this type of analysis.

7.4.2 Timing and Procedure: When and How Should the Court Exercise Its Gatekeeping Role?

The first step for the court to take in managing expert testimony in patent cases is to decide when to exercise its gatekeeping role and the process by which to do it. Although many courts permit parties to raise *Daubert* challenges in summary judgment or in limine motions, courts are most effective when they establish a separate mechanism for resolving *Daubert* challenges.

The problem with addressing *Daubert* issues as part of summary judgment or in limine briefing is that neither provides an adequate means for fleshing out the record on the factual and legal issues relevant to the sufficiency of expert testimony. Summary judgment briefing is inadequate for this purpose because there is little overlap between either the facts or the legal standards for deciding summary judgment and *Daubert* issues. And because both issues are substantial, there typically is not room in a summary judgment brief to do justice to both. The *Daubert* challenge usually gets short shrift: either as a conclusory statement, paragraph, or section tacked on to provide justification for the court to overlook what would otherwise be a question of fact created by expert testimony; or as a series of essentially thematic statements that seek to underscore the purported flaws in the opposing party's position, but nevertheless fail to assist the court because they do not squarely address the legal standard for excluding the expert's opinions.

Dealing with *Daubert* issues at the in limine stage presents different challenges, but usually reaches the same result: an insufficient record for thoughtful analysis. In limine motions reflect the harried environment in which they are prepared and decided. Briefing is typically sparse and argument short. Although this provides an efficient way to resolve simple evidentiary disputes, it is not an effective way to resolve the more complicated issues presented by a *Daubert* challenge. At a minimum, the court should have thorough, summary-judgment-length briefs from each party, but even this may not be enough in some cases. The court may also need to hear directly from the expert during an evidentiary hearing. And this is true whether the motion is styled as a *Daubert* motion or, as is often the case, as a motion in limine asking the court to preclude an expert from testifying for a purportedly simple, straightforward reason that, when considered carefully, implicates an issue related to reliability. *See, e.g.*, discussion of conclusory expert opinions in § 7.4.3.3.1.

A more effective way for courts to consider these issues is to include a specific briefing/hearing schedule for *Daubert* motions in its Case Management Order. *See* Chapter 2. The schedule should be timed such that motions are filed after experts are deposed on their reports, but well before the pretrial conference. Many courts hear *Daubert* challenges at the same time as, but separate from, summary judgment motions. Timing the briefing and hearing this way will ensure that a full record is available, but also give the court adequate time to consider the merits of each challenge.

In addition, early consideration of *Daubert* challenges prevents the risk of a party being denied any expert at trial, which in some circumstances can be a harsh sanction for a correctible error. For example, as we discuss below in § 7.4.3.3.2.1.3, a common *Daubert* challenge to a damages expert is based on an alleged incorrect date for the hypothetical negotiation for the determination of a reasonable royalty. Determining that date can be challenging, not only because it depends on technical information related to infringement that is usually beyond the purview of damages experts, but also because the trial court's summary judgment rulings can have a profound effect on that date. So it can happen that while a damages expert's *methodology* can be perfectly adequate, the *factual basis* for the analysis is incorrect as a matter of law. Of course, once informed by the court's summary judgment rulings, the expert can revise her analysis to include the correct information, so if the question is raised through an in limine motion on the eve of trial, it may seem unjust to grant the motion and strike the expert. Because of scenarios like this one, and because *Daubert* issues are usually known to the parties through expert reports and depositions well in advance of trial, resolving *Daubert* challenges well before the pretrial conference is good practice.

7.4.3 Specific Substantive Limitations on Expert Testimony

This section explores substantive limitations on expert testimony that either arise from the unique attributes of a patent case, or have a significant or unusual impact on patent cases. Motions invoking these limitations typically fall into one of three broad categories: (1) they allege that the expert opinions are directed to improper subject matter; (2) they allege that the expert is unqualified to render the opinion in question; or (3) they allege that the expert's analysis is insufficiently reliable to be admissible under Fed. R. Evid. 702.

7.4.3.1 Improper Subject Matter

Motions to preclude expert testimony directed at "improper" subject matter, which commonly arise when experts offer opinions about the research and development (R&D) leading to the patent or the prosecution of the application, usually make one of two allegations: (1) that the expert improperly speculates about what another person was thinking at a given time; or (2) that the expert is giving an opinion on a matter of law, which usurps the role of the judge. Each of these bases presents distinct issues for the court to consider.

7.4.3.1.1 State of Mind of Another Person, Usually an Inventor, Prosecutor, or Examiner

An objection that an expert improperly speculates about what another person thought, believed, or knew most frequently arises when an expert gives an opinion about why the inventor took a particular course of action during the R&D that led to the patent-in-suit. Perhaps the most common example is where an expert offers opinions that an inventor was motivated by a particular goal, or found some aspect of the research particularly challenging. A less common, but real-world, example is that an expert might review documents describing the inventor's field of study and then offer an opinion that the inventor would have known that a particular laboratory had expertise in that field. This issue also arises in expert testimony about patent prosecution, for example, when an expert offers opinions about why a prosecutor elected not to submit a reference or why an examiner cited or did not cite a piece of prior art when that information is not stated explicitly in the prosecution history.

The moving party generally argues that the expert is simply speculating about the state of mind of the inventor, prosecutor, or examiner. As a result, the opinion is not based on scientific, technical, or specialized knowledge and is not the proper basis for an opinion. Indeed, it is really an argument that should be made through a lawyer, not an expert. And if asserted as fact, it should be presented through a witness with personal knowledge, such as the prosecutor or inventor himself. In

response, the party offering the testimony typically argues that the expert does not seek to offer an opinion as to what the inventor, examiner, or prosecutor was actually thinking. Instead, the expert is opining, based on her expertise in the relevant field, what was typical or standard practice for someone in that situation to do.

The court should evaluate this type of motion on a case-by-case basis. Whether the testimony is appropriate will depend in part upon whether the expert stops short of testifying about what the inventor, examiner, or prosecutor actually believed. If so, the court should also evaluate whether knowledge about the standard practice among similarly situated people will be helpful to the jury in answering the question at hand, or distracting in a way that may affect the result for an inappropriate reason.

7.4.3.1.2 Matters of Law

This type of objection to expert testimony arises when the expert intends to testify about what legal requirements apply to a particular person or situation. Most commonly, this occurs when an expert is testifying about the prosecution of the patent-in-suit. For example, the expert might seek to inform the jury that the law requires a prosecutor to disclose all material prior art of which she is aware. Or the expert may wish to testify about the standard for materiality. Although most common in connection with testimony about patent prosecution, this issue may arise in other contexts as well. For example, an expert might attempt to offer testimony that a class of conduct is legally actionable by stating that offering a warranty on a product sold before the patent issued can constitute active inducement of infringement.

The moving party typically argues that an opinion about the state of the law inappropriately usurps the role of the judge, whose duty it is to instruct the jury about the law. Because the moving party is correct that an expert generally may not testify about the state of the law, *see*, *e.g.*, *Hygh v. Jacobs*, 961 F.2d 359, 363-64 (2d Cir. 1992); *United States v. Wilson*, 133 F.3d 251, 265 (4th Cir. 1997); *Aguilar v. Int'l Longshoremen's Union Local #10*, 996 F.2d 443, 447 (9th Cir. 1992); *United States v. Brodie*, 858 F.2d 492, 496 (9th Cir. 1988), the party offering the testimony typically argues that the expert is offering testimony about a permissible subject, such as Patent Office practice and procedure. *See*, *e.g.*, *Buckley v. Airshield Corp.*, 116 F. Supp. 2d 658, 662 (D. Md. 2000). If the court determines that the proffered opinion purports to set forth the governing law, it should exclude the testimony.

7.4.3.2 Inadequate Qualifications

In most cases, challenges to an expert's credentials present the same issues in a patent case that they do in any other case. As a result, most issues related to these motions do not merit special treatment with respect to patent litigation. But one patent-specific issue does arise with some frequency: whether a technical expert must have experience in the specific technology that is accused of infringement. For example, in a case in which a certain type of car door is the subject of the infringement claim, the expert may have a Ph.D. in mechanical engineering and computational and applied mathematics, but no experience in the automotive industry and no experience designing car doors. Should the expert be precluded from testifying on aspects of automotive door design?

The movant will typically argue that although the expert may have education, training, and experience that qualifies her as an expert in other fields, her lack of experience with the accused technology prevents her from having the specialized knowledge necessary to offer reliable opinions about the accused products. The party offering the expert will usually argue that experience with the accused technology is not a per se requirement, and that the witness's education and training—although not specific to the accused product—provide the requisite foundation for the opinion. This issue, the argument goes, should be directed to the weight that the jury gives to the testimony, not its admissibility.

Although experience with the technology at issue is not a per se requirement, it may in some cases be necessary to provide foundation for the opinions being proffered. *Compare Tormenia v. First Investors Realty Co., Inc.*, 251 F.3d 128, 136 (3d Cir. 2000), *with United States v. Marler*, 614 F.2d 47, 50 (5th Cir. 1980). Consequently, the outcome should be determined by the specific opinions that the expert intends to offer. For example, the expert with a Ph.D. in mechanical engineering mentioned above may be sufficiently qualified to compare the mechanical aspects of the accused door with the patent claims, but may not have the requisite knowledge to testify about manufacturing standards applicable in the automotive industry. Thus, the court will need to resolve this issue on a case-by-case basis, above all by applying its common sense to determine whether the expert has sufficient foundation to offer the opinions in question.

7.4.3.3 Unreliable Analysis

The third category of disputes about the substantive admissibility of expert opinions centers on whether the analysis leading to the opinions was reliable. Generally, the party challenging the expert's opinion makes one of two assertions: (1) that the expert's opinion is conclusory; or (2) that the expert misapplied an accepted methodology. The first type of motion most often arises with technical ex-

perts; the latter with damages experts and those testing or analyzing accused products.

7.4.3.3.1 Conclusory Expert Opinions

Most commonly, disputes about conclusory expert opinions take the form of motions in limine that seek to preclude a technical expert from offering an opinion about a general issue, because the expert provided only a conclusory opinion about that issue in the expert's report. Motions of this nature are most commonly filed to exclude opinions about obviousness and infringement under the doctrine of equivalents. The "conclusory" opinions sought to be excluded typically take one of two forms. One is a bald statement at the beginning or end of the expert's report offering the expert's conclusion about the ultimate issue, such as the following, after a discussion of literal infringement:

> Moreover, to the extent that there are any differences between the accused product and Claim 1, they are insubstantial and the accused products infringe under the doctrine of equivalents.

The other is an opinion that, although addressing a specific claim element and product, does no more than parrot an accepted test for determining the ultimate issue, such as the following:

> Although claim 1 requires "a layer" that performs both functions, the combination of two layers in the accused product achieves substantially the same functions in substantially the same way to achieve substantially the same result as would a single layer.

In both cases, the opinion sought to be excluded is usually preceded or followed by a discussion of the general technology of the patent-in-suit, a discussion of the accused product (or asserted prior art reference), and a detailed discussion of literal infringement (or of anticipation), but there is no other mention of equivalents (or obviousness).

The moving party typically argues that "the only" discussion in the expert report related to equivalents (or obviousness) is a single conclusory opinion such as the ones set forth above. As a result, it is impossible to determine the basis for and test the reliability of the expert's conclusions. Citing a wealth of case law, the party argues that the conclusory opinion is insufficient. *See*, *e.g.*, *Dynacore Holdings Corp. v. U.S. Philips Corp.*, 363 F.3d 1263, 1278 (Fed. Cir. 2004). Because conclusory opinions devoid of analysis are indeed inadmissible, the party offering the testimony usually counters that the statement is merely a summary of the conclusion, which is based on the detailed discussions found elsewhere in the report.

This type of motion generally requires more than a cursory review of the expert's report and provides a good example of why in limine motion practice is not

a good vehicle for deciding *Daubert* issues. Although seldom styled as a *Daubert* motion, this dispute implicates the court's gatekeeping role under Fed. R. Evid. 702. Indeed, the court must determine whether the other sections of the report reflect the reliable implementation of a reliable methodology that provides foundation for the challenged opinion. But instead of a thorough analysis of these sections under Fed. R. Evid. 702 and *Daubert*, the court is almost always presented with a bare excerpt from the report, a few stern quotations from the Federal Circuit, and no time to dig deeper before deciding the motion. An effective strategy for addressing this issue is for the court to set a separate briefing schedule for *Daubert* motions. In any event, the outcome should be determined on a case-by-case basis and will depend on whether the other sections of the report do, indeed, support the opinion alleged to be conclusory.

7.4.3.3.2 Unreliability of the Methodology or Its Application

Although disputes of this nature could arise with respect to any expert, they most commonly arise in patent cases in connection with the computation of damages. *See generally* § 11.4.3.2. Consequently, all of the examples discussed here relate to methods for calculating damages. The law requires that a patentee be awarded damages "adequate to compensate for infringement, but in no event less than a reasonable royalty for the use made of the invention by the infringer." § 284. In practice, this means damages based on a "reasonable royalty" will be an issue in almost every patent case, because a "reasonable royalty" is the "floor below which damage awards may not fall." *Rite-Hite Corp. v. Kelley Co.*, 56 F.3d 1538, 1544 (Fed. Cir. 1995). Expert testimony supporting a reasonable royalty analysis raises two clusters of issues. The first cluster concerns the methodology used to calculate the royalty; the second concerns the scope of the base to which the royalty rate is applied.

7.4.3.3.2.1 Misapplication of the *Georgia-Pacific* Factors

Courts have generally accepted the multifactor analysis set forth in *Georgia-Pacific Corp. v. U.S. Plywood Corp.*, 318 F. Supp. 1116, 1120 (S.D.N.Y. 1970), as the framework for calculating a reasonable royalty. *See, e.g.*, *Fromson v. W. Litho Plate & Supply Co.,* 853 F.2d 1568 (Fed. Cir. 1988), *overruled on other grounds by Knorr-Bremse Systeme Fuer Nutzfahrzeuge GmbH v. Dana Corp.*, 383 F.3d 1337, 1343 (Fed. Cir. 2004). Under this framework, the proffered expert attempts to determine what the royalty would have been had the parties conducted a negotiation at the time of first infringement, with both parties willing to enter into a license, having knowledge that the patent was valid and infringed. (The negotiation is, of

course, hypothetical and counterfactual, as shown by the existence of the suit.) *Georgia-Pacific* (*GP*) lays out 15 factors to be considered as part of this hypothetical negotiation. Because the framework is so widely used, most *Daubert* challenges to expert opinions on damages stem from the purported misapplication of the *GP* factors.

7.4.3.3.2.1.1 Consideration of Factors Not Specified in *Georgia-Pacific*

Although application of the 15 *GP* factors is nearly universal, some experts rely upon other factors in some cases. For example, an expert with years of licensing experience in a particular industry may elect to consider additional factors used in that industry when calculating a reasonable royalty for patents in that industry. As another example, if the patent-in-suit was purchased from the patentee by the plaintiff, an expert might consider the value attributed to that patent during the acquisition. Or, an expert might offer an opinion that takes into consideration the cost to design around the patent, the cost of removing the infringing feature from the accused product, the value attributed to the technology by respondents to marketing surveys, or myriad other factors.

When an expert does this, the opposing party often seeks to exclude the opinion on the basis that the expert departed from the accepted methodology by considering additional factors. The party offering the testimony usually counters that the specific factors outlined in *GP* are an accepted, *but not required*, tool for evaluating the outcome of a hypothetical negotiation. Indeed, the *GP* factors are not exclusive. *Georgia-Pacific*, 317 F. Supp at 1120. If the expert can provide information sufficient to show that the additional factor considered is generally accepted as relevant to valuation and was reliably applied in this instance, the court should allow the opinion.

7.4.3.3.2.1.2 Selective Use of the *GP* Factors

Similarly, experts often combine several of the *GP* factors or decline to apply one or more factors in a given case. The issue is essentially the same—*GP* provides the core framework and factors that may be used in evaluating a royalty within that framework, but there is no express requirement that every factor be applied in every case. In considering a motion brought on this ground, the court should evaluate the totality of the analysis to determine whether it reflects the overall framework, rather than evaluate the expert's consideration (or lack of consideration) of each factor in isolation.

7.4.3.3.2.1.3 Use of an Incorrect Date for the Hypothetical Negotiation

Another commonly brought motion seeks to exclude an expert opinion on the grounds that the expert used the wrong date for the hypothetical negotiation. This most often arises where multiple patents are asserted. For example, a common approach when multiple patents are at issue is to assume that the royalty for all patents is determined during a single negotiation that occurred at the time of first infringement of the earliest-infringed patent. This is especially true when the patents are part of the same patent family.

The movant usually argues either that the expert's use of an incorrect date conflicts with the legal standard or that it renders the analysis unreliable. Of course, the party offering the testimony disagrees, arguing that it is the jury's province to determine which of the factual scenarios upon which the experts' analyses are based is more accurate. Thus, the issue goes to weight, not admissibility. The nonmovant usually has the better argument. If the expert can identify a plausible explanation for the date selected that is consistent with the flexible hypothetical construct (e.g., the opinion covers a multiple-patent scenario, or reflects one party's contention about when infringement began), then the motion should be denied. *See*, *e.g.*, *Brunswick Corp. v. United States*, 46 U.S.P.Q.2d 1446 (Fed. Cir. 1998) (unpublished). But, in the case where the date used bears no logical relationship to the date of first infringement, the court should grant the motion. *See*, *e.g.*, *Unisplay S.A. v. Am. Elec. Sign Co., Inc.*, 69 F.3d 512, 518 (Fed. Cir. 1995); *Hanson v. Alpine Valley Ski Area, Inc.*, 718 F.2d 1075, 1079 (Fed. Cir. 1983) ("the key element in setting a reasonable royalty . . . is the necessity for return to the date when infringement began.").

7.4.3.3.2.1.4 Use of Facts that Post-Date the Hypothetical Negotiation

A fourth frequently filed motion concerns the extent to which experts can rely upon events that occurred after to the date of first infringement in their analysis of the *GP* factors. The movant typically contends that the analysis is legally deficient or unreliable because it relies exclusively, or partially, upon such facts. In response, the party offering the testimony typically argues that the post-infringement facts are helpful, and sometimes required, to be considered to ensure that the result of the hypothetical negotiation does not stray too far from actual events. Here, both parties can have legitimate points and the resolution depends on a subtle distinction: the expert must base her opinion on facts that predate the hypothetical negotiation, but may look to post-negotiation facts as a reality check.

In *Fromson v. Western Litho Plate & Supply Co.*, the Federal Circuit discussed the role that facts occurring after the date of the hypothetical negotiation can play in the analysis:

> The methodology encompasses fantasy and flexibility; fantasy because it requires a court to imagine what warring parties would have agreed to as willing negotiators; flexibility because it speaks of negotiations as of the time infringement began, yet permits and often requires a court to look to events and facts that occurred thereafter and that could not have been known to or predicted by the hypothesized negotiators.

853 F.2d 1568, 1575 (1988), *overruled on other grounds by Knorr-Bremse Systeme Fuer Nutzfahrzeuge GmbH v. Dana Corp.,* 383 F.3d 1337, 1343 (Fed. Cir. 2004). This language in *Fromson* flows from the Supreme Court's discussion of post-infringement facts in *Sinclair Ref. Co. v. Jenkins Petroleum Co.*:

> But a different situation is presented if years have gone by before the evidence is offered. Experience is then available to correct uncertain prophecy. Here is a book of wisdom that courts may not neglect. We find no rule of law that sets a clasp upon its pages, and forbids us to look within. . . . To correct uncertain prophecies in such circumstances is not to charge the offender with elements of value non-existent at the time of his offense. It is to bring out and expose to light the elements of value that were there from the beginning.

289 U.S. 689, 697 (1933). Nevertheless, an expert is not free to disregard entirely the date of first infringement and base her opinion entirely upon post-infringement facts:

> Burns was not discussing what royalty rate a hypothetical negotiation would have yielded *at the time infringement began.* Instead, Burns was testifying to what the parties might arrive *at the time of trial.* Such testimony was not directed to the proper reasonable royalty criteria and therefore cannot support the jury's verdict.

Unisplay, S.A. v. Am. Elec. Sign Co., Inc., 69 F.3d 512, 518 (Fed. Cir. 1995). *See also Hanson*, 718 F.2d at 1081 ("The issue of the infringer's profit is to be determined not on the basis of a hindsight evaluation of what actually happened, but on the basis of what parties to the hypothetical license negotiations would have considered at the time of the negotiations.").

From this medley of pronouncements about the relevance of post-negotiation facts, the conclusion emerges that an expert must ground her opinion in facts that would have been known on the date of the hypothetical negotiation, but may also consider post-negotiation facts to color her analysis such that it does not depart dramatically from actual events. Thus, if the court finds that the analysis is based primarily or exclusively upon post-negotiation facts, the opinion should be excluded. On the other hand, if the court finds that the expert is merely relying on

post-negotiation facts to supplement her analysis of pre-negotiation facts, the opinion should be admitted.

7.4.3.3.2.2 Use of an Incorrect Base for Damages

The last damages-related dispute that merits discussion here concerns the appropriate base from which damages are to be measured. Most commonly, this dispute arises in one of two situations: (1) where the patentee accuses a component of a larger system or product of infringement but seeks a royalty base that includes the entire system or product; or (2) where the patentee seeks to include products sold in connection with the infringing product (allegedly "convoyed sales") in the royalty base. Typically, this dispute takes the form of a motion in limine to preclude the patentee from presenting evidence or argument concerning damages based on the entire system or upon "convoyed sales." But, at times, parties elect to challenge the offending damages theory by launching a *Daubert* challenge against the expert through whom the theory will be presented. Properly conceived, these disputes are not directed at the reliability or helpfulness of the expert testimony, but rather focus on whether the patentee has a legal basis for seeking damages that extend beyond the infringing device. As such, the proper forum for this dispute to be resolved is through summary judgment (in cases where the theory has been developed through discovery) or motions in limine (in cases where the accused infringer seeks to prevent argument or testimony that has been hinted at, but not developed through discovery).

7.4.4 Motions Seeking to Prevent Lay Witness Opinions and Expert Witness Fact Testimony

Because of the multifaceted role that expert witnesses play in patent cases, it can be difficult to draw the appropriate distinction between a technical expert witness and a technically skilled fact witness, such as an inventor. In addition to her opinions, an expert witness may have personal knowledge of facts relevant to disputed issues. Further complicating trial management, fact witnesses may be just as credentialed as expert witnesses and be all too willing to offer their opinions about a multitude of subjects.

To manage this situation, the court should employ a simple guiding principle: the relationship between fact testimony and expert testimony does not change simply because a fact witness has a technology background or the expert witness has personal knowledge of relevant facts. To the extent that the witness has personal knowledge of relevant facts, she may testify about them whether or not they are technical in nature so long as the fact-witness disclosure requirements are met. She may also testify as to lay witness opinions, but may not offer opinions of an expert nature unless she is disclosed as an expert witness. If a witness is to offer

expert opinions at trial, she must satisfy both the disclosure and reliability requirements.

7.5 Managing Patent Trials through Motions In Limine

As is discussed throughout this guide, active management of patent cases is crucial at every stage of the litigation. But nowhere is such management more important than during a patent jury trial—just ask a befuddled juror required to apply an infringement analysis to a multiplicity of claims and accused products amid a bewildering set of technical facts. Motions in limine provide the court with an opportunity to establish procedures and substantive limitations that will streamline the evidence, shorten the trial, and reduce jury confusion. Indeed, effective resolution of patent-specific motions in limine can improve the jury's ability to understand the technology at issue and navigate the complex legal framework to reach sensible conclusions.

To maximize their ability to achieve these outcomes, courts should consider a number of questions with respect to each motion:

- Is this a motion that needs to be decided now, or should it wait for additional context and information to be elicited at trial?
- What is the relationship between the substantive issue to which the evidence sought to be excluded is related and other substantive issues in the case?
- Is the evidence sought to be excluded potentially relevant to multiple issues?
- Is the motion effectively dispositive?
- Should the motion have been brought at the summary judgment stage?

This section guides courts in answering these questions by discussing commonly filed motions in limine that are either patent-specific or have special import in patent cases, the challenges courts face in deciding them, and the potential impact on the course of the trial. The court should bear in mind that although substantive to some degree, these motions largely implicate procedural requirements and the balancing test of Fed. R. Evid. 403.

7.5.1 Maintaining the Integrity of the Infringement/Validity Framework

Patent cases incorporate a number of legal standards that can be difficult for an advocate to explain and even more difficult for a jury to apply. For example, as discussed in § 11.4.1.4, to determine whether an accused product infringes a particular claim, one must compare each limitation of that claim with the accused product to assess whether the limitation is satisfied, either literally or under the doctrine of equivalents. *See, e.g.*, *Aquatex Indus., Inc. v. Techniche Solutions*, 419 F.3d 1374, 1382 (Fed. Cir. 2005). This analysis must be applied for each accused

product and for each claim. Set in the context of a complex technology, this exercise is virtually guaranteed to confuse at least some members of a jury. No wonder, then, that parties undertake significant efforts to identify shortcuts to proving infringement and validity.

The first constellation of frequently filed, patent-specific motions arises as a response to these efforts. Typically styled, in whole or in part, as seeking to focus the evidence on the required legal standard, these motions ultimately seek to close down shortcuts to proving infringement and invalidity. Because these issues arise in nearly every patent case, a substantial portion of pretrial filings, including motions in limine, is often pitched to the court as attempting to require the opposing party to adhere to the proper legal standard. But, of course, not all motions pitched that way are actually directed at maintaining the integrity of the legal standards. Indeed, they often seek to preclude legitimate evidence relevant to a different issue by contending that it improperly alters the infringement or validity analysis. This section highlights four commonly brought motions implicating these issues.

7.5.1.1 Motion to Bar a Comparison Between the Accused Product and an Embodying Product (or Between Prior Art and an Embodying Product)

This motion is typically brought by the accused infringer to prevent the patentee from comparing the accused product to the patentee's product, but not exclusively so. The movant generally argues that the comparison should be barred under Fed. R. Evid. 403 because it has no probative value as to infringement and there is a substantial risk of jury confusion resulting in an improper infringement analysis.

From a substantive standpoint, a party clearly cannot be permitted to argue that a comparison between commercial products shows that the patent is or is not infringed. Of course, no sophisticated litigant would openly offer the comparison for this purpose. Instead, the respondent typically argues that the comparison has probative value for an issue other than infringement. For example, a patentee may argue that the comparison is probative of whether the infringement was willful because it shows that the accused infringer copied the patentee's product. Or, after putting on evidence concerning differences between the accused products and claim limitations, an accused infringer might argue that the comparison will help the jury understand the evidence that has already been presented. In either case, the party seeking to make the comparison should pledge that it will not argue that the comparison itself proves or bears on infringement. If it does not, it should be ordered not to make such an argument or inference. Even so, the danger of jury confusion remains.

As these examples illustrate, this motion is highly context-dependent and the court's ruling should be driven by the specific circumstances of the case. Because of

this, the court should consider deferring its ruling until it can fully appreciate the context in which the comparison will be shown to the jury. If the court elects to defer this or any other motion in limine, it should impose strict conditions on how the motion will be addressed during trial. For example, it should bar the parties from using the comparison in opening statements and instruct the parties that the dispute over this evidence absolutely will not be addressed in the presence of the jury. Instead, the party offering the evidence should be required to notify the court on the day preceding the trial day on which the evidence will be offered. In addition, the court should hear the motion before trial begins for that day. If the offering party or the court believes that testimony yet to be elicited will provide relevant context, the court should require the offering party to provide an offer of proof rather than hear the motion in the middle of the trial day. These measures, strictly enforced, will help prevent the disputed evidence from being "inadvertently" elicited in the jury's presence.

7.5.1.2 Motion to Bar Presentation of Embodying Products as Physical Exhibits

A more extreme version of the motion discussed above is to ask the court to bar introduction of the embodying product as a physical exhibit. The movant typically argues that the embodying product should be excluded under Fed. R. Evid. 403 because it has no probative value for infringement, but risks confusing the jury and resulting in an improper infringement analysis. The party seeking to offer the embodiment as a physical exhibit typically makes one of two arguments in response. One typical argument is that the sample is relevant to an issue other than infringement. For example, a patentee might argue that the physical sample is a prototype corroborating pre-filing development work and is thus highly relevant to the patent's priority date, which is in turn relevant to invalidity. Another typical argument is that a physical embodiment will help the jury understand the technology and thus understand the infringement and invalidity issues that it will have to decide.

Even if the embodying product has no legal relevance, this does not mean that it should be excluded, per se. The court should not discount the importance of providing the jury with a mechanism that will help it understand the technology and technical issues in dispute. It is entirely appropriate to admit a physical sample for this purpose. But whether the physical sample in question will help illuminate the relevant technical issues for the jury depends entirely on the context in which it is offered. In addition to evaluating the difficulty of the technology and the issues in dispute, the court may find it helpful to evaluate the quality of the other tools being offered to the jury and attempt to gauge the jury's response to them before admitting this evidence solely for that purpose. As a result, the court should

consider deferring resolution of the motion until it is in a position to evaluate these factors.

7.5.1.3 Motion to Bar Evidence that the Accused Infringer Has Patents of Its Own

This motion is brought by the patentee to prevent the accused infringer from introducing its own patents into evidence. The typical argument is that there is no legitimate purpose for introducing the patents because they are not relevant to any disputed issue. Thus, their introduction is a "frolic and detour" that will waste time. Moreover, the argument typically points to the risk that the jury will be confused by the introduction of the new patents and the technologies they claim. This risk is heightened dramatically, patentees typically argue, when the patents in question claim improvements over the patent being asserted (e.g., the asserted patent claims a car with round wheels and the improvement patents claim a car with round *rubber* wheels). In such a case, there is a risk that the jury will misinterpret the existence of an improvement patent as providing a basis for finding no infringement. This happens because juries can fail to grasp the fundamental concept that multiple patents can cover a single product, and thus fail to appreciate that the existence of an improvement patent does not shield its holder from liability for infringement of a more basic patent. *See*, *e.g.*, *Bio-Tech Gen. Corp. v. Genentech, Inc.*, 80 F.3d 1553, 1559 (Fed. Cir. 1996).

Of course, this argument founders if the accused infringer identifies a legitimate purpose for introducing its own patents. For example, a patent in which the accused infringer described its products as being different from the asserted patent may be relevant to the reverse doctrine of equivalents or to a lack of the intent required for inducement. In addition, the figures or description contained in an accused infringer's patent may help the jury understand aspects of the accused products better than any other piece of evidence available. This may be particularly important where the technology is complex or abstract.

Depending upon the argument for relevance advanced by the accused infringer, the court may benefit from deferring the motion until some evidence has been elicited so that it may better gauge whether the purpose advanced is legitimate or pretextual. If legitimate, the court can head off jury confusion by including in its instructions the admonition that a patent gives its holder the right to exclude others from making the invention, not the right to practice it, and illustrating this point with concrete examples.

7.5.1.4 Motion to Bar Argument that Patent Is Not Infringed Because It Is Invalid

In this motion, the patentee seeks to prevent the accused infringer from arguing that it does not infringe the patent because the patent is invalid or unenforceable. Infringement and validity are separate issues that should be decided separately. *See, e.g.*, *Cardinal Chem. Co. v. Morton Int'l*, 508 U.S. 83, 96 (1993); *Spectra-Physics, Inc. v. Coherent, Inc.*, 827 F.3d 1524, 1535 (Fed. Cir. 1987); *see also MedImmune, Inc. v. Genentech, Inc.*, 549 U.S. 118, 127 S. Ct. 76, 773 n.10 (2007). Likewise, infringement and enforceability are distinct issues. *Gardco Mfg, Inc. v. Herst Lighting Co.*, 820 F.2d 1209, 1213 (Fed. Cir. 1987). As a result, this motion should be granted.

7.5.2 Untimely Disclosures

The second constellation of frequently made motions in limine concerns evidence that is asserted to have been disclosed in an untimely fashion. Untimely disclosures, whether relating to documents, expert opinions, or fact witnesses, are certainly not unique to patent cases. Indeed, tardy disclosures in patent cases often result from the same root causes, and have the same effects, as tardy disclosures in other cases. But one characteristic sets patent cases apart—the relativity of the parties' basic contentions.

In patent cases, there is a fundamental tension between infringement and invalidity: the broader the claim, the more likely it is to be infringed, but the less likely it is to be valid, and vice versa. This tension causes parties to take positions that are relative to the other party's positions. For example, a defendant may argue that an asserted claim does not cover its products because claim limitation X is different from product element Y, but that if Y is within the scope of X as the patentee asserts, then the claim is invalidated by prior art that also contains element Y. Likewise, a patentee may argue that a claim element is missing from a prior art reference, but if present as the defendant asserts, additional products containing that element infringe. More subtly, the products and prior art at issue determine which disputes are joined at the claim construction, summary judgment, and trial stages. As a result, the discovery (or exclusion from evidence) of a single prior art reference, for example, may fundamentally affect the invalidity and infringement arguments of both parties. For this reason, several jurisdictions have established local rules that require infringement and invalidity contentions to be exchanged at certain points during discovery. *See* Appendix D (summary of districts with Patent Local Rules or standard practices that affect patent cases). Courts in jurisdictions that have not adopted such rules should consider implementing similar procedures through a standing or scheduling order.

The relativity of the parties' contentions affects the way that courts should evaluate and redress complaints of untimely disclosed evidence in several ways. First, it is important that the court resolve these motions as quickly as possible, and in any event before opening statements. Whether a belated disclosure is justifiable and/or excusable depends upon facts that should be available to the court before trial, and so trial evidence is not likely to shed light on the proper result. Moreover, because the admission or exclusion of the evidence could fundamentally alter both parties' trial strategies, it is important that the court resolve such disputes before the parties lay out their trial themes during opening statements.

Second, an apparent untimely disclosure may be justified in light of the circumstances. For example, the discovery and production of a prior art reference on the day before discovery closes may be timely, depending on the court's rules, but it also may warrant supplementation of interrogatory responses or disclosure of additional evidence by the opposing party after discovery closes. Or, in cases in which the court holds claim construction proceedings after discovery closes, an unexpected construction may justify a cascade of new contentions and evidence.

A third, related, point is that the court should treat each belated disclosure independently. Indeed, it is often inequitable to treat both parties' disclosures the same way. For example, one party's belated expert report may be justified in light of the circumstances, while the opposing party's belated report is unjustified. Not only would applying parity to this situation be unfair, the addition of new facts may itself create new inequities. Instead, the court should first determine which belated disclosures, if any, will be excused, and then evaluate what, if any, remedial disclosures are necessary to prevent prejudice to the receiving party. For example, the court may find that it is equitable to allow a party to rebut the other party's belated report, but not to allow it to supplement its existing reports on other issues.

With these principles in mind, we turn to three commonly filed motions in limine arising from belated disclosures.

7.5.2.1 Motion to Preclude Undisclosed Fact Witnesses

This motion seeks to exclude witnesses identified on a party's trial witness list who were not disclosed in that party's initial/supplemental disclosures or interrogatory responses. It largely implicates the same issues as do similar motions in other types of cases, and should typically be handled the same way. But the court should consider the above discussion in evaluating whether the witness disclosure was timely in light of the circumstances.

7.5.2.2 Motion to Preclude Undisclosed Prior Art

In evaluating a patentee's motion to exclude undisclosed or belatedly disclosed prior art, the court should be aware of at least two patent-specific issues. The first,

which derives from the Patent Act itself, is that an accused infringer must disclose the prior art that it intends to assert at trial at least 30 days prior to the first day of trial. § 282.3 The second is the substantial effect that admitting or excluding even one reference could have on the litigation. These issues are discussed in turn.

Accused infringers attempting to inject new prior art into evidence after the close of discovery typically invoke § 282 as justification for allowing the reference despite the late disclosure. Patentees typically respond that § 282 does not excuse compliance with federal rule, local rule, and court-imposed deadlines. Patentees have the better argument. "[A]lthough § 282 sets a minimum period for the identification of prior art to be introduced as evidence of anticipation, a specific judicial directive for the timing of discovery establishes the procedures to which the parties are bound." *ADT Corp. v. Lydall, Inc.*, 159 F.3d 534, 551 (Fed. Cir. 1998). Thus, the court should evaluate this failure to comply with its discovery schedule through the same lens as it would any other transgression to determine whether the belated disclosure was somehow justified in light of the circumstances.

Accused infringers attempting to excuse a failure to serve a § 282 disclosure complying with the statute typically argue that the prior art was disclosed sufficiently through earlier discovery responses. Patentees typically argue that this is insufficient because compliance with judicially established deadlines cannot excuse a failure to comply with a statutory requirement. The patentees typically have the better of this argument, too, although it can be a much closer case. A failure to comply with § 282 may be grounds for exclusion, even if the prior art was produced in discovery or identified in discovery responses. *Ferguson-Beauregard v. Mega Sys. LLC*, 350 F.3d 1327, 1347 (Fed. Cir. 2003). But exclusion is not required. *See, e.g.*, *Eaton Corp. v. Appliance Valves Corp.*, 792 F.2d 874, 879-80 (Fed. Cir. 1986); *but see Applera Corp. v. MJ Research, Inc.*, 389 F. Supp. 2d 344, 351 (D. Conn. 2005) (excluding prior art for failure to comply with § 282 and noting that the Federal Rules have tightened since *Eaton* was decided). In this situation, the court should measure whether the purpose of the rule—that the patentee be advised that the prior art will be *asserted at trial*—has been served. *Eaton*, 792 F.3d at 879 ("What counts is notice of intent to rely."). If the patentee knew of the accused

---

3. Section 282 provides in pertinent part that:

> In actions involving the validity or infringement of a patent the party asserting invalidity or noninfringement shall give notice in the pleadings or otherwise in writing to the adverse party at least thirty days before the trial, of the country, number, date, and name of the patentee of any patent, the title, date, and page numbers of any publication to be relied upon as anticipation of the patent in suit or, except in actions in the United States Claims Court [United States Court of Federal Claims], as showing the state of the art, and the name and address of any person who may be relied upon as the prior inventor or as having prior knowledge of or as having previously used or offered for sale the invention of the patent in suit. In the absence of such notice proof of the said matters may not be made at the trial except on such terms as the court requires.

infringer's intent to rely on the art at trial, then it *may be* equitable, depending upon the circumstances, to excuse the failure to comply with § 282. For example, in a jurisdiction that requires invalidity contentions by local rule, it does not seem equitable to require a later document specifically titled "Section 282 Notice" to admit a prior art reference that had been identified earlier in the case as part of those contentions. A court may well find that the invalidity contentions serve the purposes of the statute.

This motion implicates broader issues, as well: whether the belated disclosure is justifiable in light of some action on the part of the patentee or the court, and the extent to which allowing the reference will have downstream effects. A prior art reference, more than any other single document, has tremendous potential to drive the parties to refine or outright alter their positions concerning any issue, to add or drop claims, and to affect expert testimony presented at trial. As a result, allowing even one new prior art reference to be added after the close of discovery may trigger a cascade of new evidence or arguments. In light of this, the court may require substantial justification before excusing belated disclosure of prior art. On the other hand, allowing supplemental art may be an appropriate remedy to counterbalance discovery violations on the part of the patentee. The equities will vary with every fact pattern, so there is no "best" approach, other than to consider carefully that the decision on this motion is likely to resonate far beyond the specific documents at issue.

7.5.2.3 Motion to Preclude Untimely Expert Opinions

The third type of commonly filed motion centers around whether and to what extent experts are permitted to testify at trial beyond the expert reports prepared according to the schedule set forth in Fed. R. Civ. P. 26 or by the court's scheduling order. Typically, this motion comes in one of three forms.

7.5.2.3.1 Opinions Not Disclosed in Reports

The first variant seeks to preclude experts from testifying about issues that were not identified in any timely served report. Commonly, these opinions come to light through a declaration filed in support of a summary judgment motion or a supplemental report served after the close of expert discovery.

Although the court should address this type of motion as soon as possible, many courts do not address the untimeliness of opinions included in summary judgment declarations at the summary judgment stage, instead keeping silent on the issue or explicitly deferring a ruling until later in the case. The danger in this approach is that it effectively decides the issue in favor of admissibility: without guidance from the court, the receiving party deposes the expert, the prejudice argument is weakened, and the court ultimately allows the opinions, either alone or

in connection with a tradeoff that allows both parties to disclose opinions outside the normal schedule. But although a one-for-one exchange of reports may appear fair on its face, for the reasons discussed above, it may significantly handicap the receiving party. It also allows the disclosing party to circumvent the court's schedule and undermines the court's ability to manage its docket.

When belated opinions are styled as "supplemental reports," the danger is that the court will treat supplemental reports as interchangeable and adopt an "all-in or all-out" approach. While sometimes appropriate, this approach risks significant prejudice—the scope of opinions set forth in supplemental reports may differ significantly, one report may have downstream effects while the other does not, and one belated disclosure may be justified while the other is not.

7.5.2.3.2 Affirmative Opinions Disclosed in Rebuttal Reports

The second variant seeks to exclude affirmative opinions that were disclosed for the first time in "rebuttal" reports served pursuant to Fed. R. Civ. P. 26(a)(2)(C) or the court's scheduling order. As Fed. R. Civ. P. 26(a)(2)(C) states, these "rebuttal" disclosures are made "solely to contradict or rebut" expert opinions disclosed by the other side. Thus, it is clearly improper to label affirmative opinions as "rebuttal" in nature and to evaluate them under that standard. Instead, the court should treat such disclosures for what they are: "supplemental" opinions, which should be evaluated according to the principles set forth in § 0.

7.5.2.3.3 Limit Experts to their Reports

The third variant seeks to prevent experts from testifying on direct examination about opinions that go beyond their reports. In principle, this motion should be granted. But, in practice, it is often difficult to draw a clear line. On the one hand, experts should not be limited to a recitation of their reports. On the other hand, the more flexibility the expert has to restate her opinions, the more likely it is that the ultimate opinion will contain substantive differences that prejudice the other party. Furthermore, context can be very important in discerning which departures from the report are appropriate and which are not.

For these reasons, the court should attempt to resolve this motion early, but may need to defer decision concerning certain issues until trial. Rather than grant a blanket motion stating that experts are limited to reports, which will encourage objections during the expert's testimony, the court should address this general subject on an issue-by-issue basis. It can do so in several ways. First, if a party has concerns directed at certain issues—e.g., a function-way-result analysis of potential equivalents—before trial, the party should be required to brief these issues specifically in its motions in limine. If specific concerns arise during trial, but before the

expert is put on the stand (e.g., through exchange of graphics or witness binders), the party opposing the testimony should be required to raise the issue in advance, outside the presence of the jury, to allow the court to evaluate the issue before the expert is called to testify. Finally, parties calling an expert should be encouraged to resolve potential disputes in advance. One way to do so would be to require an expert to move on to a completely different subject when an objection about scope is made so that the objection can be resolved outside the presence of the jury. By implementing these procedures, the court can prevent surprise testimony and reduce the number of disputes that are joined in the jury's presence.

7.5.3 Precluding Claims/Defenses

A third constellation of motions seeks to preclude a party from presenting evidence concerning a particular claim or defense. Three examples illustrate common issues:

Doctrine of Equivalents: The accused infringer brings a motion to preclude the patentee from presenting any evidence concerning the doctrine of equivalents. The thrust of the argument is often that there is no expert testimony (or no expert testimony that is sufficiently detailed to be admissible, see § 7.4.3.3.1) explaining why the element of the accused product has "insubstantial differences" from the relevant claim limitation. Without such testimony, so the argument goes, there is no evidence to show that the differences are insubstantial, and therefore no way to prove infringement under the doctrine of equivalents. Therefore, evidence or argument directed at the doctrine should be precluded as prejudicial and likely to confuse the jury.

Obviousness: The patentee brings a motion to preclude the accused infringer from presenting evidence that a claim is obvious in light of one or more prior art references. Typically, the patentee makes one of two arguments:

- that the accused infringer identified no evidence that one of ordinary skill in the art had a motivation to combine the references (note that evidence of a specific motivation to combine reference for obviousness purposes is no longer required, although the Supreme Court has stated that it may be helpful to the analysis. *See KSR Int'l Co. v. Teleflex, Inc.*, 127 S. Ct. 1727, 1741 (2007); *see also* § 11.3.5.2); or
- that the accused infringer identified no adequate expert testimony to explain the elements of obviousness. Thus, evidence or argument directed at the specific obviousness combination—or obviousness generally—would be irrelevant, prejudicial, and likely to confuse the jury. But note that obviousness is a legal issue that does not always require expert testimony, although it may be helpful. *Moleculon Research Corp. v. CBS, Inc.*, 793 F.2d 1261, 1270 (Fed. Cir. 1986) (argument that expert testimony is required "borders on the frivolous").

Damages: The accused infringer brings a motion to preclude any evidence of damages prior to the filing of the lawsuit (or the date on which the patentee provided notice of the patent, if earlier). Typically, the accused infringer argues that § 287 bars pre-notice damages unless the patentee marks products covered by the patent with the patent number, and that the patentee has identified no evidence of the required "marking." Therefore, evidence concerning pre-notice damages would be irrelevant and prejudicial. The patentee may argue in response that a reasonable royalty analysis depends on the "time of first infringement," and pre-notice activities must be addressed as part of that analysis.

As these examples illustrate, there is often no clean line between a true motion in limine and a summary judgment motion in disguise. One way to resolve this question is to focus on the differences between the motion in limine and summary judgment processes. At the summary judgment stage, the briefs are longer, contain more factual detail, and present a fuller explication of the relevant legal standards than at the motion in limine stage. Likewise, summary judgment arguments tend to be longer and the court typically takes much more time to resolve a summary judgment motion than it does a motion in limine. When presented with a borderline motion in limine, the court should consider whether the issue would benefit from fuller examination. In most cases, it will and the court should deny the motion. *See Kimball ex rel. Kimball v. RJ Reynolds Tobacco Co.*, No. C03-664JLR, 2006 U.S. Dist. LEXIS 27138 (W.D. Wash. April 26, 2006) ("The court assumes that counsel is aware of the differences between dispositive motions and motions in limine. The court is thus surprised and disappointed to find numerous dispositive motions pending only days before trial.").

Merely denying the motion, though, deprives the court of an opportunity to weed out issues for which a party will not be able to carry its burden of proof. As a result, the court should advise parties during the initial Case Management Conference that it will treat certain exclusion/preclusion motions, such as those identified above, as summary judgment motions. *See* Chapter 2. With fair warning, parties may elect to bring these motions at the summary judgment stage, giving the court an opportunity to resolve these disputes with adequate time for evaluating the record.

7.5.4 Miscellaneous Patent-Related Motions

In addition to the three constellations of motions discussed above, several other motions in limine with patent-specific implications arise in many cases.

7.5.4.1 Motion to Bar Evidence/Argument Inconsistent with Claim Construction

This motion can be brought by either party and asserts that the opposing party seeks to re-argue, or present evidence that conflicts with, the court's construction of a particular claim term. Typically, the moving party argues that claim construction is an issue of law to be decided by the court and that arguing or presenting inconsistent evidence to the jury intrudes into the province of the court. Consequently, the argument goes, a party should not be permitted to ask the jury to construe a claim term or to present evidence that clearly implicates a contrary construction.

Taken at face value, the movant's argument is sensible—claim construction is a legal exercise that must be performed by the court. *See Markman v. Westview Instruments, Inc.*, 517 U.S. 370, 391 (1996); § 5.2. But this motion is often more complicated because parties also employ this reasoning to exclude legitimate arguments and evidence directed at issues that do not rely on claim construction. For example, a written description defense is premised on a comparison between the construed claim and the originally filed specification to determine whether the patentee was in possession of the claimed invention at the time the application was filed. *See*, *e.g.*, *Moba, B.V. v. Diamond Automation, Inc.*, 325 F.3d 1306, 1320-21 (Fed. Cir. 2003). If an accused infringer were to argue that the inventor was not in possession of the invention as claimed because the construed claim lacks a limitation corresponding to a feature of the embodiments discussed in the specification, this does not invite the jury to rewrite the court's claim construction, at least expressly. The argument is directed to a different issue. Likewise, a non-infringement defense based on the reverse doctrine of equivalents is premised on a comparison of the accused product to the originally filed application. *See*, *e.g.*, *Scripps Clinic & Research Found. v. Genentech*, 927 F.2d 1565, 1581 (Fed. Cir. 1991). Therefore, an accused infringer offering evidence of that comparison is not seeking to rewrite the court's claim construction, but rather to satisfy a different legal standard.

Because the argument that an alleged infringer is seeking to diverge from the court's claim construction is so easily used to thwart a genuine defense, it is important that the court evaluate carefully whether there is a legitimate purpose for introducing the evidence or making the argument, and not simply take the motion at face value. Moreover, because the decision may have far-reaching effects (especially if the court's ruling has the effect of precluding a defense), the court should rule on this motion before trial begins.

7.5.4.2 Motion to Preclude Reference to an Expert's Contrary Claim Construction Opinion

Experts in patent cases are often asked to provide opinions at multiple stages in the case. They will, for example, often be asked at the claim construction stage to offer an opinion directed to explaining how a person having ordinary skill in the art would have understood a term at the time the patent application was filed. Once the court has construed the claims, the experts will be asked at the "expert discovery" stage to offer opinions applying the court's construction to reach conclusions related to infringement and validity. When multiple experts offer conflicting opinions about claim construction, at least one expert's opinion is necessarily at odds with the court's ultimate construction.

This motion is brought to prevent one party from cross-examining the other party's expert based on statements made to support a losing claim construction position. Typically, the argument is that the opinion has no relevance to infringement or validity. Moreover, the jury is likely to misunderstand why the expert is "changing" positions—because she must apply the court's construction—and may unfairly discount the expert's credibility. One counterargument is that the substance of the claim construction reveals inconsistencies beyond the meaning applied to the claim term. For example, an expert might opine at the claim construction stage that a prior art technique was widely known, but opine later in the case that the technique was known only to a few artisans. In this example, the inconsistency—and the blow to credibility—has nothing to do with the ultimate conclusion that the expert reached about claim construction; the testimony is simply inconsistent. As a result, the court should consider allowing the use of such prior opinions based upon a case-by-case balancing of probative value and potential prejudice. In some instances, the court should consider deferring decision on the motion until the direct examination of the expert is complete so as to better appreciate the import of the alleged inconsistency.

7.5.4.3 Motion to Bar Evidence/Argument About Dropped Claims/Patents

This motion is brought by the patentee and seeks to preclude any reference to the fact that the patentee initially asserted more claims or patents than it is pursuing at trial. Typically, the patentee argues that the claims/patents were dropped for efficiency and that this change does not reflect the merits of the liability arguments concerning those claims/patents in any way. As a result, the argument goes, this fact has no probative value. Moreover, there is substantial risk of prejudice because the jury is likely to assume that the claims were dropped because the patentee believed them to be invalid or not infringed.

Accused infringers typically argue that the fact that the patentee dropped claims or patents does have probative value, at least when willful infringement or an antitrust counterclaim is asserted. In the former situation, the fact that the patentee initially asserted additional/different patents or claims before pursuing the patents/claims asserted at trial may affect the reasonableness of the accused infringer's response. Therefore, as the argument goes, this fact is relevant to whether the accused infringer reasonably believed that it had a right to continue its allegedly infringing conduct. In the antitrust counterclaim scenario, the counterclaim plaintiff may seek to show that the patentee has engaged in an unwarranted campaign to instill fear, uncertainty, and doubt into the marketplace by falsely asserting patent infringement.

There is no clear-cut way to resolve this motion. The outcome is highly fact-dependent. The accused infringer may in some case legitimately seek to use the information to rebut willfulness or for some other purpose. Even so, this motion should be decided before opening statements. In most cases, waiting for testimony to be elicited during trial will not provide additional clarity about which side has the better argument. In the case of antitrust counterclaims, this issue weighs in favor of bifurcating the trial (affirmative patent infringement claims tried first; antitrust counterclaims addressed in a second trial phase) so as to avoid confusing the jury.

7.5.4.4 Motion to Bar Disclosure that the Patentee Seeks an Injunction

This motion is brought by the patentee and seeks to preclude any evidence or argument to the jury disclosing that the patentee seeks an injunction. Because a request for an injunction seeks equitable relief, it is decided by the court, rather than by the jury. Typically, the patentee argues that disclosing the request for injunction has no probative value and would prejudice the plaintiff by potentially generating sympathy that could affect the jury's decision making on liability. The accused infringer often responds that mentioning the possibility of an injunction is no more prejudicial than disclosing the size of the damages award sought (which, of course, is disclosed, unless the case is bifurcated), and that the information may be relevant to other issues in the case, such as the accused infringer's state of mind for willfulness (e.g., that the accused infringer evaluated the patent seriously because it knew the plaintiff would be seeking an injunction). If relevance to an issue before the jury is shown, the motion should generally be denied. But the court should evaluate the motion carefully to discern whether, given the specific facts of the case, the risk of prejudice trumps the probative value of the argument or evidence.

7.5.4.5 Motion to Preclude Reference to Related Proceedings in the Patent Office

This motion is often, although not always, brought by the patentee, who seeks to preclude any reference to a pending re-examination or re-issue involving the patent-in-suit. Typically, the argument is that the parallel proceedings have no relevance until they are completed—when the claims are ultimately issued intact, modified, or rejected. Moreover, there is considerable risk that the jury will misunderstand the significance of the proceedings and will inappropriately weigh this evidence. In response, the opposing party typically counters that the parallel proceeding has substantial probative value concerning invalidity or inequitable conduct. For example, if the Patent Office decides to re-examine the patent-in-suit because of a particular prior art reference, that fact supports the argument that the reference is material, which is relevant to inequitable conduct. Conversely, if the Patent Office reissued a patent over a prior art reference, this supports the argument that the reference is not material. *See*, *e.g.*, *Bristol-Myers Squibb Co. v. Rhone-Poulenc Rorer, Inc.*, 326 F.3d 1226, 1237 (Fed. Cir. 2003).

Because the evidence will often have some probative value, but also some potential for prejudice, the court should consider carefully what, exactly, from the parallel proceedings can be used, and for what exact purpose. This judgment may be better informed once trial has begun, when the court can evaluate the precise context in which the evidence will be presented.

7.5.4.6 Motion to Preclude Evidence Concerning Undisclosed Opinions of Counsel

In many patent cases, the parties ask the court to decide whether, and to what extent, the fact that an opinion of counsel relating to the patent-in-suit was obtained or not obtained, or disclosed or not disclosed, can be presented to the jury. There is no duty for an accused infringer to obtain an opinion of counsel. *In re Seagate Tech. LLC*, 497 F.3d 1360, 1371 (Fed. Cir. 2007) (en banc). Moreover, the Federal Circuit has made clear that the jury can no longer be instructed that it may draw an adverse inference from the accused infringer's decision not to obtain an opinion of counsel, or not to rely upon one at trial. *Knorr-Bremse Systeme Fuer Nutzfahrzeuge v. Dana Corp.*, 383 F.3d 1337, 1345 (Fed. Cir. 2004) (en banc). But the en banc court in *Knorr* expressly reserved the question whether non-disclosure is one of the facts making up the totality of the circumstances that is considered in determining willfulness. *Id.* at 1346-47. Likewise, it left unresolved the extent to which a jury should consider a decision not to obtain an opinion. *Id.* A panel decision appeared to answer this question in the affirmative. *Golden Blount, Inc. v. Robert H. Peterson Co.*, 438 F.3d 1354, 1369 (Fed. Cir. 2006). The law in this area is still unsettled. In particular, the en banc Federal Circuit's decision in *In re Sea-*

gate, which abandoned the established "affirmative duty of due care" standard for willfulness in favor of an "objective recklessness" standard, will result in a great deal of activity as courts attempt to implement the new standard. As a result, the authors recommend that the court review the most current decisions concerning willfulness before ruling on a motion in limine that implicates advice of counsel.

Chapter 8
Trial

8.1 Procedural Issues
- 8.1.1 Separate Trials
  - 8.1.1.1 Bifurcating Legal and Equitable Issues
    - 8.1.1.1.1 When to Bifurcate
    - 8.1.1.1.2 Use of an Advisory Jury
  - 8.1.1.2 Separate Proceeding on Willfulness
  - 8.1.1.3 Bifurcating Damages
  - 8.1.1.4 Bifurcating Different Patents
  - 8.1.1.5 Bifurcating Non-Patent Causes of Action
  - 8.1.1.6 Bifurcating to Aid Juror Comprehension
- 8.1.2 Trial Logistics
  - 8.1.2.1 Time Limits
    - 8.1.2.1.1 Determining the Length of Trial
    - 8.1.2.1.2 Allocation of Trial Time
      - 8.1.2.1.2.1 Time Limits on Witness Examinations
      - 8.1.2.1.2.2 Time Limits on Opening and Closing Statements
    - 8.1.2.1.3 Modification of Time Limits
  - 8.1.2.2 Procedures for the Presentation of Evidence
    - 8.1.2.2.1 Trial Schedule
    - 8.1.2.2.2 Order of Trial Presentations
      - 8.1.2.2.2.1 Evidentiary and Witness Presentation
      - 8.1.2.2.2.2 Closing Statements
      - 8.1.2.2.2.3 Openness of Courtroom
  - 8.1.2.3 Procedures for Managing the Jury
    - 8.1.2.3.1 Jury Selection and Voir Dire
    - 8.1.2.3.2 Timing of Jury Instructions
      - 8.1.2.3.2.1 Jury Admonitions
    - 8.1.2.3.3 Juror Binders
    - 8.1.2.3.4 Jury Notetaking
    - 8.1.2.3.5 Allowing Juror Questions
    - 8.1.2.3.6 Transition Statements by Counsel to the Jury
    - 8.1.2.3.7 Jury Education and Tutorials
  - 8.1.2.4 Special Master, Court-Appointed Expert, or Confidential Advisors

8.2 General Evidentiary Issues
- 8.2.1 Witnesses
  - 8.2.1.1 Patent Law Experts
  - 8.2.1.2 Inventor and Other Technical Party Employee Testimony
- 8.2.2 Exhibits
- 8.2.3 Demonstratives
- 8.2.4 Limits on Attorney Argument

8.3 Specific Substantive Issues
- 8.3.1 Indirect Infringement
- 8.3.2 Invalidity
  - 8.3.2.1 Presumption of Validity
  - 8.3.2.2 Obviousness
- 8.3.3 Patent Damages

8.4 Motions for Judgment as a Matter of Law

8.5 Jury Deliberations
- 8.5.1 Schedule of Deliberations
- 8.5.2 Claim Construction Considerations
- 8.5.3 Jury Access to Evidence

8.5.3.1 Exhibits and Demonstratives
8.5.3.2 Testimony
8.5.3.3 Juror Questions During Deliberations
8.5.4 Verdict Forms
8.5.4.1 General Verdict Forms
8.5.4.2 Special Verdict Forms and Special Interrogatories
8.6 Bench Trials

In previous chapters, we discussed approaches for managing patent cases during the various stages of pretrial litigation. While case management during the pretrial phase goes a long way in ensuring smooth proceedings during trial, patent trials present their own distinctive issues.

In a patent case, the involvement of a lay jury, which typically lacks knowledge concerning the complex and highly technical issues in question, colors almost all aspects of trial. Inherent complexity and inappropriate argumentation can result in unsupportable or inconsistent findings of fact by a confused jury. An inordinate amount of time and resources after trial may be spent trying to unravel and remedy such findings. Thus trial, like all other phases of a patent case, benefits from early and close judicial management.

As the Federal Circuit has remarked, a court's "discretion is at its broadest on matters of trial management." *Mass. Inst. of Tech. v. Abacus Software*, 462 F.3d 1344, 1367 (Fed. Cir. 2006). This chapter reviews the procedural and substantive considerations that factor into the exercise of the court's discretion, and discusses approaches for structuring proceedings and narrowing issues to facilitate the jury's and the court's fact-finding role.

8.1 Procedural Issues

Before any trial can begin, the court must define the scope of trial and the ground rules governing its proceedings, including bifurcation and trial logistics. And when a jury is involved, the court should also establish procedures for assisting the jury's comprehension of the technologies involved. These issues must be addressed to some degree in all civil trials, but are of particular import in the patent litigation context, where cases often involve numerous complex and technical claims and defenses.

This section discusses the advantages and disadvantages of particular approaches to these process issues. Specifically, we explore when to hold separate trials for the different issues disputed in patent cases. We discuss under what circumstances a particular trial schedule and organization works best. We then consider what procedures a court can adopt to assist the jury in understanding a patent case's often highly technical trial presentations.

8.1.1 Separate Trials

The first question in any patent trial is whether all the issues involved should be resolved in a single proceeding. It is generally more efficient to have one trial and one appeal. *See Johns Hopkins Univ. v. CellPro*, 160 F.R.D. 30, 35 (D. Del. 1995). Thus, bifurcation in patent cases is the exception, not the rule, and appropriate only if it will promote judicial economy and not be inconvenient or prejudicial to the parties. *See F & G Scrolling Mouse L.L.C. v. IBM Corp.*, 190 F.R.D. 385 (M.D.N.C. 1999) (burden on moving party to show bifurcation will (1) promote greater convenience to parties, witnesses, jurors, and the court, (2) be conductive to expedition and economy, and (3) not result in undue prejudice to any party); *Spectra-Physics Lasers, Inc. v. Uniphase Corp.*, 144 F.R.D. 99, 101 (N.D. Cal. 1992) (denying motion to bifurcate trial into separate liability and damages phases where defendant failed to meet its burden).

Patent cases are often complex, however, sometimes involving different technologies, non-patent claims with overlapping facts, and various legal and equitable claims and defenses. Whether all these issues should be resolved in a single trial depends upon the facts and circumstances of the particular case. Factors to be considered when deciding whether to bifurcate include whether the issues, and the evidence required for each issue, are significantly different; whether they are triable by jury or the court; whether discovery has been directed to a single trial of all issues; whether a party would be prejudiced by a single or separate trials; and whether a single trial would create the potential for jury confusion. *McDaniel v. Anheuser-Busch, Inc.*, 987 F.2d 298, 305 n.22 (5th Cir. 1993); *Angelo v. Armstrong World Indus., Inc.*, 11 F.3d 957, 964 (10th Cir. 1993); *Hirst v. Gertzen*, 676 F.2d 1252, 1261 (9th Cir. 1982); *Kimberly-Clark Corp. v. James River Corp.*, 131 F.R.D. 607, 608-09 (N.D. Ga. 1989).

Ultimately, considerations regarding the manageability and comprehensibility (particularly for jurors) of the various issues presented in the case should govern the decision to bifurcate and hold separate trials. From a case management standpoint, bifurcation can assist the court in segregating from juror consideration evidence that may be integral for one issue, but irrelevant and prejudicial for another issue in the case. Bifurcation can also assist jurors by focusing jurors' attention on one issue at a time, helping to avoid confusion that can result from overwhelming jurors with multiple complex issues as once. At the same time, there are efficiencies that result from resolving all issues in one proceeding that should not be disregarded when deciding whether to bifurcate, or even trifurcate patent cases.

8.1.1.1 Bifurcating Legal and Equitable Issues

Many of the common defenses to a patent infringement action are equitable in nature. In addition to non-infringement and invalidity, many defendants as-

sert inequitable conduct, patent misuse, laches, or equitable estoppel that would render an asserted patent unenforceable. There are also affirmative patent claims, such as claims of joint inventorship, that are equitable in nature. While the facts underlying the merits of infringement and invalidity claims and defenses are within the province of a jury, equitable claims and defenses are exclusively within the court's purview.

8.1.1.1.1 When to Bifurcate

Because legal and equitable issues are decided by different factfinders, it is common and appropriate to hold separate jury and bench trials on the different issues. Separate trials are particularly appropriate where the equitable issues involve facts that are irrelevant or marginally relevant to the liability issues to be decided by the jury, or which may prejudice a party's case on infringement or validity. For example, claims of an inventor's misconduct before the PTO relevant to an inequitable conduct defense, while irrelevant to infringement, may influence a jury's decision on that issue by suggesting that the inventor is untrustworthy. Separating the equitable claims for the court will avoid jury confusion and ensure that the juries' decision is based on proper and relevant evidence.

Moreover, a separate and early trial on the equitable defenses can sometimes promote resolution of the case. *See Agfa Corp. v. Creo Prods. Inc.*, 451 F.3d 1366, 1371-75 (Fed. Cir. 2006) (affirming trial court's discretion to conduct a bench trial on the equitable issue of unenforceability before infringement or validity are tried to a jury (citing *Gardco Mfg., Inc. v. Herst Lighting Co.*, 820 F.2d 1209, 1213 (Fed. Cir. 1987)). Where the alleged infringer has a strong equitable defense, a trial on those issues may lead to an early unenforceability finding, obviating the need for the more expensive and technically involved jury trial phase on infringement and validity.

While holding two separate proceedings can be more burdensome, there are procedures for increasing the efficiency of multiple trials. Jury trials and bench trials can be conducted in parallel to reduce the burden on witnesses who may have relevant testimony for both phases. By trying the legal issues to the jury in the morning sessions, and then conducting the bench trial in the afternoon, the court can coordinate the availability of witnesses and conserve both judicial and party resources.

Bifurcating legal and equitable claims can, however, implicate Seventh Amendment concerns. Therefore, care must be taken not to impinge upon a party's right to a full jury trial on its legal claims when trying equitable claims separately. *Beacon Theatres, Inc. v. Westover*, 359 U.S. 500, 508 (1959). Facts relevant to a party's legal claims must be decided by a jury. To the extent there is significant factual overlap between the legal and equitable claims, it may be improper for the court to decide the equitable claims before a jury determines the legal

claims. For example, the Federal Circuit recently found it improper to hold a bench trial on an equitable claim for correction of inventorship before a jury could decide the fraud claim based upon the same inventorship issue. *Shum v. Intel*, 499 F.3d 1272, 1277-79 (Fed. Cir. 2007). The relationship between the equitable and legal claims is the determinative factor: Whether there is commonality between the factual issues underlying the equitable and legal claims such that determination of the equitable claim by the court effectively denies a party the right to a jury trial on the legal claims. Thus, bench trials on equitable claims can be held before a jury trial on legal claims without violating the Seventh Amendment if resolution of the respective claims turns on different factual findings. *See generally Ethicon v. U.S. Surgical Corp.*, 135 F.3d 1456 (Fed. Cir. 1998) (upholding district court's finding of improper inventorship and dismissal of infringement claim because issue of infringement does not share common factual issues with claim for inventorship); *Paragon Podiatry Lab., Inc. v. KLM Labs., Inc.*, 984 F.2d 1182, 1190 (Fed. Cir. 1993) ("The defense of inequitable conduct in a patent suit, being entirely equitable in nature, is not an issue for a jury to decide. . . . A patentee has no right to a jury trial respecting the factual element of culpable intent as part of the defense of inequitable conduct.").

Efficiency is another consideration in deciding whether to bifurcate legal and equitable claims. It may be more efficient to present all the evidence in one proceeding. For example, an alleged infringer may rely on an opinion that a patent is unenforceable in defending against a claim of willful infringement. Such evidence relating to claims of inequitable conduct may be relevant to determining whether an accused infringer was objectively reckless under the standard articulated in *In re Seagate Tech., LLC,* 497 F.3d 1360 (Fed. Cir. 2007) (en banc). Likewise, evidence of patent misuse is often the same evidence used to support antitrust claims. Courts should consider whether evidence that otherwise should be limited to a court hearing on equitable claims are now also relevant to an accused infringer's defense to willful infringement. While not dispositive on the question of bifurcation, it is appropriate to consider whether efficiencies can be achieved by having the same evidence presented simultaneously to the jury and the court. Courts should continue to consider and weigh the potential benefits of efficiency against the potential for prejudicial misuse of evidence by the jury.

8.1.1.1.2 Use of an Advisory Jury

Although reserved for the court, equitable issues need not be tried separately. All issues can go to the jury by consent of the parties. Fed. R. Civ. P. 39(c). Even without consent, the court may try the equitable issues with an advisory jury. *Id.* The jury's verdict on the equitable claims is merely advisory, and a court may consider it but is not bound by the decision. The advantage of an advisory jury is that it enables all issues to be presented within one proceeding; a major disadvantage is

that it risks contaminating the jury's consideration of the legal issues (for example, invalidity) with evidence relevant only to the equitable claim (for example, inequitable conduct). Moreover, a jury's fact finding can constrain the court's determination on equitable issues, and courts need to be conscientious not to disregard findings of fact that implicate legal claims.

In light of these considerations, it is often preferred to have equitable issues, such as inequitable conduct, tried separately to the court following the jury's consideration of the legal claims. A separate proceeding after the jury's fact finding provides the court the benefit of the jury's factual determinations (avoiding any Seventh Amendment issues), while eliminating the risk of juror confusion or prejudicial misuse of evidence relevant only to the equitable claims. Only the evidence relevant to the equitable claims and not presented to the jury need be presented during the separate court proceeding. As a result, a separate court trial on inequitable conduct, for instance, typically only requires an additional one or two days. The additional time needed for a separate court trial on inequitable conduct is often counterbalanced by not having to present this additional evidence to the jury or spend time during the jury phase discussing possible limiting instructions regarding evidence relevant only to equitable claims.

8.1.1.2 Separate Proceeding on Willfulness

In the past, the rationale for separating willfulness was that the inquiry raised many issues that may be confusing to the jury and improperly affect a finding on infringement. Under prior law, evidence of willfulness addressed the subjective intent of the alleged infringer, which usually is not relevant to infringement. Moreover, alleged infringers often relied on opinion of counsel to defend against claims of willful infringement. Evidence obtained as a result of the corresponding waiver of the attorney-client privilege could be used to establish intent, but not as evidence of infringement.

The Federal Circuit's decision in *In re Seagate Tech., LLC*, 497 F.3d 1360 (Fed. Cir. 2007) (en banc), changed the focus of a willfulness inquiry from subjective intent to one of objective recklessness. Evidence of state of mind, which previously dominated the willfulness inquiry, is not relevant to a determination of whether an alleged infringer acted despite an objectively high likelihood that its actions constituted infringement. *Id.* at 1371. Moreover, under *Seagate,* alleged infringers no longer have an affirmative duty to investigate whether they are infringing and have no duty to obtain opinion of counsel. Therefore, willfulness presentations are less likely to implicate privileged information or intent issues.

While the *Seagate* standard reduces the relevance of intent issues in determining willfulness, all of an accused infringer's defenses, including equitable defenses, may become relevant in determining whether the accused infringer's conduct was objectively reckless. Traditional considerations of whether the prejudicial impact of

evidence relating to claims of inequitable conduct will outweigh any probative value with respect to the claim of willful infringement should continue to control a court's decision to bifurcate claims of willfulness, inequitable conduct, or both.

8.1.1.3 Bifurcating Damages

Liability and damages issues frequently are susceptible to bifurcation. *F & G Scrolling Mouse L.L.C v. IBM Corp.*, 190 F.R.D. 385, 388 (M.D.N.C. 1999). The determination of damages presents its own set of issues separate and apart from the complexity of the liability aspects of most patent cases. Proof of lost profits or a reasonable royalty can involve voluminous data and complicated financial analyses by economic experts. This evidence can be difficult to understand and may have little relationship to patent liability issues. Separating these issues can sometimes reduce the complexity of the case while increasing the jury's ability to understand the evidence being presented.

For obvious reasons, bifurcation of damages can also expedite a trial, if liability is resolved for the alleged infringer. But if the patentee prevails, the entire effort is complicated and extended by the need for a separate trial. And patentees have a legitimate argument that bifurcating damages can skew the verdict against them, since the jury knows it can go home earlier if it rules for the accused infringer on liability. In practice, most courts decline to bifurcate damages.

8.1.1.4 Bifurcating Different Patents

Patent cases often involve counterclaims for patent infringement. While a plaintiff may assert one set of patents, a defendant may counterclaim for infringement of its own patents. Often the technologies between the plaintiff's asserted patents and the defendant's asserted patents are the same, such that trial on both sets of infringement claims would involve the same expert witnesses and the same fact witnesses. In those cases, it may be more efficient to have both the patent infringement claims and counterclaims go forward in one trial. *See Hilleby v. FMC Corp.*, 25 U.S.P.Q.2d 1413, 1416 (N.D. Cal. 1992).

Where the patents asserted in the counterclaim implicate different technology, different facts, different defenses, and different witnesses, trying all these issues together in one proceeding may be inappropriate. Sorting through different technologies and the different related claims and defenses can be unmanageable for both the court and the jury. In such cases, the court should consider bifurcating plaintiff's patent claims from defendant's patent claims and holding separate trials.

Typically, the plaintiff's case should proceed first, with trial on defendant's patents following. The second trial should proceed immediately after the first to

avoid any unfair advantage that may result from resolving one set of patent infringement claims before the other.

8.1.1.5 Bifurcating Non-Patent Causes of Action

In addition to patent claims, parties often assert related causes of action, such as antitrust, contract, and trade secret. To streamline the case and make issues more comprehensible, it can sometimes be helpful to separate trial on the non-patent causes. Whether bifurcation is appropriate depends on the interrelationships of the causes of action asserted and the specifics of the case.

Antitrust is a common counterclaim to a patent infringement action. Equitable defenses to patent infringement, such as patent misuse, can also implicate antitrust issues. Antitrust claims involve a different body of law and a different factual inquiry than infringement or invalidity. The Federal Circuit has recognized that bifurcating antitrust claims is a common and accepted practice. *In re Innotron Diagnostics*, 800 F.2d 1077, 1086 (Fed. Cir. 1986). When bifurcating antitrust claims, it is usually advisable to try the patent claims first. The outcome of the antitrust claims will often depend upon the resolution of the patent claims. Moreover, parties often assert antitrust claims in patent cases for the purpose of gaining leverage in the litigation. Resolution of the patent case will often lead the parties to resolve informally the antitrust claims, eliminating the need for the court to expend time and resources considering claims that are of collateral or secondary importance.

Non-patent causes of action based on contract and trade secret law are sometimes less amenable to bifurcation. When patents are the subject of a licensing agreement or some other contract, resolution of the patent claims is often dispositive or at least relevant to the contract cause of action. And where a trade secret claim involves arguments that either one of the parties misappropriated closely related technology, it will usually make sense to try the claims together. However, if the claim is that the patent itself resulted from a theft of secrets, it may be more sensible to try that claim first.

8.1.1.6 Bifurcating to Aid Juror Comprehension

As discussed in §§ 8.1.1.1 through 8.1.1.5, the decision to bifurcate any particular issue should balance the interests of the parties, the efficiencies in holding one proceeding, the court's ability to manage the case, and the practical ability of the jury to comprehend the complex issues in the case. Not only is the number of patent cases increasing in recent years, but so is the number of defendants being named as alleged infringers in each case. As this trend continues, concerns over the jury's ability to keep track of the patent technology and the technology of each of the many accused products will weigh more heavily in the bifurcation cal-

culus. Naturally, the more complex the case, the more bifurcation will become a necessity to ensure manageability and juror comprehension. In very complex cases (involving multiple defendants and multiple patents) courts are now considering bifurcating not only the issues discussed in §§ 8.1.1.1 through 8.1.1.5, above, but also the issue of infringement and validity, as well as holding separate trials for separate defendants.

In a one-patent, one-defendant case, the overall balance of interests usually will not favor bifurcating the jury's determination of infringement from its determination of patent validity. When multiple defendants and multiple patents are involved, however, a jury will be asked to evaluate the various patented inventions against numerous accused products. That undertaking combined with the introduction of numerous prior art references relevant to the validity inquiry can be overwhelming, particularly when the asserted patents implicate complicated technology. In such cases, any economic benefit to having only one proceeding is significantly outweighed by the likelihood of juror confusion. In the many complex cases, courts are now considering trying infringement separate from validity. The court can maintain some degree of consistency and efficiency by trying the issues to the same jury, while allowing the jury to focus on one issue at a time through separate proceedings. With the same jury impaneled, the parties need not duplicate presentation of evidence relevant to both infringement and validity. In addition, this process may encourage settlement, as it affords the parties an opportunity to evaluate their case at each stage.

Similarly, in cases in which a plaintiff has named multiple defendants, courts may elect to hold separate trials, especially on infringement issues for the separate defendants or separate groups of defendants as to whom the infringement issues are similar. This will assist the jury in keeping track of the various accused products and technologies implicated by the lawsuit. Moreover, co-defendants may often disagree on trial strategies, and separate proceedings will enable each defendant to control its defense. Thus, while bifurcating or trifurcating cases into more manageable units assists in juror comprehension, the associated costs to holding separate trials makes bifurcation a practice best reserved for the most complex cases.

8.1.2 Trial Logistics

Whatever the scope of the trial, it is the court's responsibility to set and enforce the guidelines that govern its proceedings. Effective management of patent trials includes establishing reasonable time limits, maintaining a daily trial schedule, and outlining the order of the parties' presentations. With an established protocol, the parties are better able to structure and streamline their presentations to fit the court's schedule, resulting in a more understandable and efficient dispute resolution process.

8.1.2.1 Time Limits

A trial court's inherent power to control cases includes the broad authority to impose reasonable time limits during trial to focus the parties' presentation of evidence and prevent undue delay, waste of time, or needless presentation of cumulative evidence. Fed. R. Civ. P. 16(c)(15); *see also Applera Corp. v. MJ Research Inc.*, 389 F. Supp. 2d 344, 348 (D. Conn. 2005); *Motorola v. Interdigital Tech. Corp.*, 930 F. Supp. 952, 983 (D. Del. 1990) ("The Court's inherent power to control cases before it includes the power to set time limits for a trial."). Time limits have been recognized as a trial technique that enhances the quality of justice and improves the administrative aspects of any civil trial. *Amgen, Inc. v. Hoescht Marion Roussel, Inc.*, 339 F. Supp. 2d 202, 298 (D. Mass. 2004) (*citing The Vanishing Trial*, Discussion at the ABA Section on Litigation Symposium (Dec. 12-14, 2003)). They force the parties to evaluate what is and is not important to their case. Time limits are particularly appropriate in patent cases, where the issues are complex and an unduly long trial would unnecessarily burden jurors and the court. *Applera*, 389 F. Supp. 2d at 348.

8.1.2.1.1 Determining the Length of Trial

What is a reasonable time for trial depends upon the particulars of a case. The number of patents at issue, the complexity of the technology, the nature and number of any associated non-patent claims, and whether issues are being bifurcated should all be taken into consideration when determining the length of trial.

To account for all these factors, a court's limits on the length of trial should be set after an informed analysis based on a review of the parties' proposed witness lists and proferred testimony, as well as their estimates of trial time. *See Duquesne Light Co. v. Westinghouse Elec. Corp.*, 66 F.3d 604, 610 (3d Cir. 1995). Time limits that are reasonable are (1) established in consultation with the parties; (2) allocated evenhandedly; (3) allotted to whatever evidence the parties deem appropriate; and (4) applied flexibly. *Id.*

Whatever the specifics of the case, a limit on the total amount of time for trial is advisable in almost every patent case. An open-ended case schedule quickly can become unmanageable in the face of so many complex issues, and imposes an unnecessary and unreasonable burden on the jury impaneled to hear the case. Therefore, the court should adopt an absolute limit on the length of trial based on input from the parties and the court's own evaluation of the case. Experience has shown that most patent cases can be fully tried within two weeks, allocating approximately twenty hours to each side, beginning with opening statements and continuing through closing arguments. (Procedures conducted by the court, mainly voir dire and instructions, typically are not clocked.)

8.1.2.1.2 Allocation of Trial Time

In general, trial time should be split evenly between the parties. The nature of patent cases is such that the burden of presenting evidence falls roughly equally on the parties. The presumed equal allocation can be adjusted for any demonstrable difference in the complexity of issues. Any time spent questioning witnesses, either on direct or cross-examination, should be counted against the questioning party, as would time spent reading that party's designated deposition transcripts into the record. *Duquesne Light Co.*, 66 F.3d at 610 (expressing concern over the district court's "puzzling" calculation of time by attributing the defendant's cross-examination of plaintiff's witnesses against plaintiff's trial time); *Applera*, 389 F. Supp. 2d at 347-48.

The key is to provide some temporal framework to motivate the parties to use trial time efficiently. How structured a framework is required depends upon the specifics of the case. In some cases, it is enough to simply inform the parties of their total time for trial and leave it to their discretion to determine how to utilize their time. In other cases, it may be appropriate for the court to allocate time for each phase of trial, placing time limits on opening and closing statements and each witness examination.

8.1.2.1.2.1 Time Limits on Witness Examinations

A highly managed approach with set time limits for each witness examination should be reserved for the most complex cases involving multiple patents and multiple different claims and defenses. These cases are often lengthy and have the greatest risk of jury confusion. Extending trial beyond the initial estimate can pose an undue hardship on jurors. Limiting the time for each phase of trial helps to regulate the parties' use of time, ensuring that they will stay within the time allotted for trial. Setting and requiring the parties to meet interim time limits also compels them to assess their case and the importance of each witness for each phase of the trial, which leads to clearer and more targeted presentations and examinations for the factfinder.

The difficulty with this approach, however, is that trial is a fluid process. Rigid time limits restrict the parties' ability to react to events and revelations that occur during the trial. During trial, the parties often drop witnesses or make changes to their examinations. It is harder to adapt to these changes in a case that has already divided the trial time for different witnesses. Indeed, imposition of time limits for individual witnesses often invites additional disputes and requests during trial for adjustment of time allotments. As a result, a tool intended to help trial proceed more orderly will, in fact, serve to stymie the smooth progression of trial.

In almost all cases, it is sufficient to allow the parties to determine how much time to spend examining particular witnesses from their general time allotment.

Permitting flexibility in witness examinations allows the parties to adjust their presentations to highlight witnesses that prove more critical, and to follow up on testimony elicited during trial. Counsel in patent cases are often litigators with enough experience to manage their time without the need for limits on individual witness examinations. Thus, this type of high-level management is far more likely to promote an efficient trial and avoid ongoing requests for time adjustments.

8.1.2.1.2.2 Time Limits on Opening and Closing Statements

Time limits on opening and closing statements are more common and more feasible than trying to predict how much time is necessary and appropriate for each witness. Many courts have established time limits for opening and closing statements.

Typical time limits are less applicable in the patent context, however. Due to the complexity and the number of issues involved, opening and closing statements in a patent case usually require more time than those in a typical civil case. It is not unusual for the parties in a patent case to spend from one to two hours on an opening or closing statement. More commonly, opening arguments in patent cases fall within the 30-45 minute range and closings from 40 to 60 minutes (including rebuttal).

Thus, the ten- to thirty-minute time limit sometimes imposed in civil cases is generally not appropriate in a patent trial. The amount of time needed for useful opening and closing statements in patent cases approaches the practical time limit dictated by a jury's attention span. Thus, a fair and appropriate time limit on opening and closing statements is often superfluous, as parties rarely extend statements beyond that.

8.1.2.1.3 Modification of Time Limits

Whatever approach is taken, time limits should not to be applied so rigidly as to "sacrifice justice in the name of efficiency." *Navellier v. Sletten*, 262 F.3d 923, 941 (9th Cir. 2001). Strict adherence to time limits that prejudice a party's case can lead to new trial motions and grounds for appeal.

To ensure that the time limits imposed are reasonable, the court should monitor how much time is charged to each party and provide periodic updates to the parties. Giving periodic updates allows the parties to reassess case strategy and their allocation of time, if necessary.

It is advisable to have court staff act as the official timekeeper to avoid disputes or uncertainty that can result if the parties are left to the task. Court oversight of the trial clock enables the court to evaluate the progress of the case and ensure that the parties are on schedule. Based on the continued reassessment of the case, the

court can determine if a party's request for additional time is warranted. Courts should exercise some flexibility in modifying time limits where the parties have been conscientious and expeditious in their use of time. Where, however, the lack of time available at the end of the case is the consequence of a party's mismanagement, it is not an abuse of discretion to refuse additional time. *See, e.g., Gen. Signal Corp. v. MCI Telecomms. Corp.*, 66 F.3d 1500, 1508-09 (9th Cir. 1995).

While the court need not grant additional time, it should not reduce a party's time without good cause. "[A]n allocation of trial time relied upon by the parties should not be taken away easily and without warning." *Duquesne*, 66 F.3d at 610. The parties plan trial strategy based upon their time allotment. Action taken to reduce the allotment during trial leaves little opportunity to reassess trial plans. Therefore, modifications of time limits that reduce the parties' allotment should rarely be made, and only when a party is abusing trial time. Even then, a party should be given clear warning and indication of the consequences of its trial behavior before action is taken.

As time estimates are subject to modification, the jury should not be informed of specific time limits. It is usually advisable to inform the jurors of how long the trial is expected to last to determine whether they will be able to serve and to allow them to make necessary arrangements. *See* Ninth Circuit Jury Trial Improvement Committee, Second Interim Report: Recommendations and Suggested Best Practices, Recommendation II (October 2006). Discussions regarding specific interim time limits, however, are not information jurors need to perform their duty.

While it can be a tactic used to motivate the parties to operate within time limits, making the jury conscious of time can draw attention away from the merits of the presentation. Clocks can become a distraction and interfere with the jury's role as a neutral factfinder. Furthermore, the jury may become biased against a party that uses or requests more time. Accordingly, discussions regarding time should also be conducted outside the presence of the jury.

8.1.2.2 Procedures for the Presentation of Evidence

In addition to time limits, the court must also determine how the presentation of evidence is going to proceed during trial. The court needs to set a schedule that will facilitate the timely completion of trial. It also needs to establish the order in which the parties will use their time to present the various issues. The court should consider what will assist the jury in understanding the evidence to ensure that presentations and arguments are helpful.

8.1.2.2.1 Trial Schedule

The trial schedule adopted by the court will affect how long trial will last, and should be taken into consideration when setting time limits for trial. The trial

schedule should also take into consideration the jury's attention span. Many factors go into determining an appropriate trial schedule: the potential burden on the jury, the court's availability, witness availability, holidays, and the issues being tried.

It may seem most efficient to complete trial by holding all-day proceedings five days a week. The court's obligation to other matters, however, may make it difficult to accommodate such a demanding schedule. Furthermore, many other practical considerations may make a full-time schedule infeasible, and in some cases less efficient.

Later in this chapter, we discuss the types of evidentiary issues that may arise during a patent trial. These issues must be resolved outside the presence of the jury. A full-day trial schedule leaves little time available for the court to consider disputes that arise during the course of trial. As a result, with full-day schedules, the jury may have to be kept waiting while the court resolves evidentiary or legal disputes. A half-day schedule allows the court to consider legal issues in the afternoon without wasting juror time. A court can also use the afternoon to try equitable issues without the jury. Equitable issues often involve overlapping facts and witnesses. Having the jury and bench trials proceed in parallel can help conserve resources as equitable issues often involve overlapping facts and witnesses. The advantages and disadvantages of holding parallel proceedings versus a separate bench trial following the jury trial are discussed more fully in the section on bifurcation. *See* § 8.1.1.1.

There are several additional benefits to adopting a half-day schedule that increase both the overall efficiency and quality of proceedings. The real advantage of a half-day schedule is that it allows jurors to arrange their schedules so that they can serve on the jury and still attend to their jobs or family responsibilities, reducing the hardship that would otherwise result from lengthy trials. The attention of the jury also wanes during long trial days. A half-day schedule also gives the parties more time to make their disclosures and prepare their presentations. In an abundance of caution, parties are often over-inclusive in their presentations. Having more time to refine their case can eliminate a lot of needless evidence and corresponding disputes, increasing the overall efficiency of proceedings. *See* Ninth Circuit Jury Trial Improvement Committee, Second Interim Report: Recommendations and Suggested Best Practices, Recommendation III (judges report that they accomplish as much, if not more, with a compressed scheduled as a regularly scheduled trial day, and that attorneys are usually better prepared).

Whether court is in session for four or five days a week, the goal of a trial schedule is to balance efficiency with quality. Holding full-day proceedings can certainly help to complete the trial faster. Such a rigorous schedule is best suited for shorter trials. Full-day schedules, however, can become overly demanding and burdensome for longer trials. In practice, it is rare for a typical patent trial to last for more than two weeks, particularly in light of the time limits that are becoming

more common. Even for a trial that lasts two weeks or less, it is often advisable to hold as least one or two half-days during the trial week so that the court and the parties have built-in time to address evidentiary and trial logistics issues outside the presence of the jury.

8.1.2.2.2 Order of Trial Presentations

Once the trial time and schedule are set, the court should establish guidelines on how the time is going to be used. The court has discretion to control the order in which the parties will present proof. In typical cases, the plaintiffs go first because they bear the burden of proof. In patent cases, however, the burden of proof is shared by the parties. While plaintiffs bear the burden of proof on infringement, for example, defendants bear the burden of proof on invalidity. Therefore, the order of trial presentation and closing statements should take into account the various issues being tried.

8.1.2.2.2.1 Evidentiary and Witness Presentation

The parties' presentations should begin with the patentee's case-in-chief. As some cases are declaratory judgment actions, the patentee may not always be the plaintiff in the action. It nonetheless makes sense to have the patent owner's infringement case presented first as it is the rights conferred to a patentee that form the basis of all patent suits. The patentee must present all of its evidence on matters on which it bears the burden of proof in its case-in-chief, including evidence of infringement and any other additional non-patent claims.

At the close of the patentee's case, the alleged infringer will put on its case. In addition to responding to the patentee's evidence on infringement and willfulness, the alleged infringer must also present evidence on the claims on which it bears the burden of proof, such as invalidity and inequitable conduct (if tried together). Where infringement is not disputed, the defendant should usually proceed first on its invalidity defenses.

After the alleged infringer rests its case, the patentee should be allowed to present evidence restricted to responding to the alleged infringer's affirmative case (i.e., invalidity and/or inequitable conduct).

8.1.2.2.2.2 Closing Statements

Closing arguments should be structured similarly to the order of trial presentation. It is customary for the party with the burden of proof to open and close the arguments. *See, e.g.*, *Moylan v. Meadow Club, Inc.*, 979 F.2d 1246, 1251 (7th Cir. 1992). With the burden of proof shifting for different claims, patent cases usually require four closing statements.

Again, the patentee usually begins, summarizing the evidence presented on its affirmative claims of infringement and damages, along with any other non-patent causes of action. The alleged infringer then presents its closing remarks, summarizing its response to the patentee's claims and presenting its arguments on invalidity. The patentee then rebuts on infringement and damages and responds on invalidity. The alleged infringer gets the final statement, restricted to rebuttal on invalidity.

8.1.2.2.2.3 Openness of Courtroom

8.1.2.2.2.3.1 Exclusion of Witnesses

The court's power to control and shape trial includes the power to sequester witnesses before, during, and after their testimony. *Geders v. United States*, 425 U.S. 80, 87 (1976). At the request of a party, the court must exclude witnesses so that they cannot hear the testimony of other witnesses. Fed. R. Evid. 615. The purpose is to prevent witnesses who have yet to testify from tailoring their testimony to that of earlier witnesses, and to increase the likelihood that testimony will be based on a witness's own recollection. *Id.*, Advisory Committee Notes.

The Federal Rules except from exclusion a party or party representative, however. *Id.* Therefore, a witness who has been designated as a company's corporate representative at trial is not excludable. The court should have the parties designate corporate representatives before the start of trial so that any issues regarding the designee's possible role as a witness can be resolved prior to trial.

The Federal Rules also provide that a person whose presence is shown to be essential to the presentation of the party's cause should not be excluded. *Id.* This exception is most often applied to expert witnesses, but a showing that the expert's presence is essential to the case is still required. *See, e.g., Malek v. Fed. Ins. Co.*, 994 F.2d 49, 53-54 (2d Cir. 1993); *Morvant v. Constr. Aggregates Corp.*, 570 F.2d 626, 629-30 (6th Cir. 1978). To avoid any disputes, the court should encourage the parties to reach agreement as to whether expert witnesses can remain in the courtroom during testimony of other witnesses.

8.1.2.2.2.3.2 Exclusion of Public

Separate from the issue of witness exclusion is the issue of whether the public will be excluded from the courtroom during trial. Patent cases often require presentation of confidential and proprietary technical information of a company, sometimes including third-parties' information. Protective orders governing the use of confidential competitive information are in place in almost all patent cases. Before trial begins, the court should decide what protective orders are necessary to protect trade secret evidence introduced at trial.

While the public has a limited interest in information produced by parties during discovery, it has a strong right of access to information and documents introduced at trial. *See In re Adobe Sys., Inc. Sec. Litig.*, 141 F.R.D. 155, 165 (N.D. Cal. 1992). In general, trials should remain open and accessible to the public.

A courtroom should not be closed simply because a company's proprietary technology is involved. The public should be excluded only where there is a showing of a compelling interest in maintaining the confidentiality of documents or revelation of proprietary information through testimony. To the extent confidential documents or information are extensively and genuinely part of the case, they should be part of the public record. *Id.* at 161. The court should, however, protect against the entry of confidential information into the trial record for the sole purpose of damaging an opponent's business.

In contrast to some other areas of law in which secrecy is sought, the kind of information that the parties may want to protect in patent litigation is much more likely to be legitimate technical data that should be protected. If the court makes clear that it will grant sealing requests only when the requesting party has made an effort to "cluster" the offered evidence (so that the courtroom has to be cleared a minimum number of times), the problem becomes self-enforcing and inappropriate closure is avoided.

8.1.2.3 Procedures for Managing the Jury

While the court's decisions regarding trial logistics should always take into consideration the role of the jury, there are specific procedural mechanisms by which the court can directly address the issues of ensuring jury comprehension and guiding the conduct of the jury.

8.1.2.3.1 Jury Selection and Voir Dire

Like any other civil trial, patent jury trials are governed by the Federal Rules of Civil Procedure, which require that a jury be impaneled with a minimum of six and a maximum of twelve jurors. *See* Fed. R. Civ. P. 48. The decision as to how many jurors will be impaneled should be finalized prior to the first day of trial and the start of the jury selection process.

As patent trials can take longer than other civil trials and are often more complex, it may prove difficult to find jurors able to commit the necessary time and attention. Such considerations weigh against impaneling a twelve-member jury. On the other hand, it is advisable to impanel more than the minimum six jurors to ensure a verdict can be taken even if one or two jurors become unable to serve during trial.

The voir dire process in a patent trial is largely similar to that in other civil cases. However, given the specialized nature of the case, it is appropriate to ques-

tion prospective jurors on their experience with the technology underlying the patents, experience with the patent system, and their feelings regarding patent protection.

Because both parties are likely to be interested in eliciting such information, the voir dire process can be streamlined by having the prospective jurors complete questionnaires ahead of time. The court should encourage the parties to settle upon a juror questionnaire covering the information both sides are interested in eliciting before the start of trial. The parties and the court can determine whether any jurors should be excused for cause based on the responses to the juror questionnaire.

Thereafter, the court should explain the voir dire process to the prospective jurors, and allow each side a reasonable amount of time to conduct focused voir dire.

8.1.2.3.2 Timing of Jury Instructions

In the previous chapter, we discussed the process of preparing jury instructions for patent trials. Jury instructions are designed to explain the trial process to the jury and educate jurors on the law governing the issues they will be deciding. The parties have a right to have the jury instructed on the general law applicable to the case. *See Williams v. Jader Fuel Co., Inc.*, 944 F.2d 1388, 1402 (7th Cir. 1992); *H.H. Robertson Co., Cupples Prods. Div. v. V.S. DiCarlo Gen. Contractors, Inc.*, 950 F.2d 572, 578 (8th Cir. 1991). Indeed, the court has an independent duty to instruct the jury. *Belotte v. Zayre Corp.*, 531 F.2d 1100, 1102 n.1 (1st Cir. 1976).

Jury instructions must be set before closing arguments begin. Fed. R. Civ. P. 51(b). The court must allow the parties to object to instructions before the jury is instructed and before closing arguments. *Id.* Indeed, a party must object to an instruction before it can later claim an instruction was given in error. *Id.* In the past, this general rule was applied to jury instructions pertaining to the court's claim constructions. *See, e.g.*, *Serio-US Indus., Inc. v. Plastic Recovery Techs. Corp.*, 459 F.3d 1311, 1317 (Fed. Cir. 2006) (holding that appellant failed to timely object to claim construction jury instruction); *NTP, Inc. v. Research in Motion, Ltd.*, 418 F.3d 1282, 1312 (Fed. Cir. 2005) (recognizing defendant made a timely objection to claim construction jury instruction (citing *Advanced Display Sys., Inc. v. Kent State Univ.,* 212 F.3d 1272, 1281 (Fed. Cir. 2000)). The Federal Circuit has since held that a party need not renew its objections to the court's claim construction when the claim construction jury instruction is given if the party's position was previously made clear to the court. *O2 Micro Int'l Ltd. v. Beyond Innovation Tech.*, 521 F.3d 1351, 1359 (Fed. Cir. 2008).

The court otherwise has discretion as to when it instructs the jury. Fed. R. Civ. P. 51. The timing of jury instructions can affect how useful the instructions are in educating the jury and assisting them in understanding the case.

Particular issues concerning preliminary and final jury instructions on substantive issues of law, including the requirement to instruct the jury on the court's

claim constructions, are discussed in the previous chapter. Here, we discuss jury management issues and techniques that can be employed during trial to assist the jury and improve their comprehension, including admonitions, jury binders and notetaking, and allowing juror questions and transitional statements by counsel.

8.1.2.3.2.1 Jury Admonitions

Besides preliminary and final jury instructions, there are limited instructions that the court should give to the jury during the presentation of evidence. Occasionally, evidence will be introduced for a limited purpose or through means other than witness testimony. During trial, the court should explain when the parties stipulate to testimony or facts or introduce evidence through discovery. In addition, instructions regarding the limited purpose of evidence should be given during trial at the time the evidence is introduced.

Other than that, the main instructions given during trial are admonitions to the jury. The court should inform the jurors that whenever they are allowed to separate (during breaks or at the end of each day), they should not discuss the case with anyone and should immediately inform the court if approached by anyone regarding the case. Typically, the admonition is given as part of the preliminary instructions. It is useful to remind the jury of this duty once trial begins, although it may not be necessary to admonish the jurors before each separation.

The prohibition against communications regarding the case typically extends to discussions between the jurors, as well, barring any discussions of evidence until formal deliberations. The concern is that jurors may form an opinion before consideration of all evidence. Adherence to early-formed beliefs are thought to prejudice defendants as plaintiffs put on their case first.

Recent studies, however, indicate that discussions before final deliberations do not lead to early verdicts. *See* Ninth Circuit Jury Trial Improvement Committee, Second Interim Report: Recommendations and Suggested Best Practices, Recommendation XV. Permitting jurors to discuss evidence during the course of trial can improve juror comprehension and reduce requests for read-back of testimony. Interim discussions also allow the jurors to clarify misunderstandings when they arise. Because private conversations between small groups of jurors can become divisive, interim discussions should only be allowed when all jurors are present.

Jury comprehension is of particular concern in patent matters. For that reason, interim jury deliberations can be a useful tool in maximizing jury comprehension. *See* Comments to Instruction 1.12, *Ninth Circuit Model Jury Instructions*. As the risk of prejudice falls more on one party than another, however, the court should consider the parties' positions on the matter before allowing interim jury discussions. In any event, the court should caution jurors to remain open-minded and not to make a decision until all the evidence is presented. *United States v. Klee*, 494 F.2d 394 (9th Cir. 1974).

8.1.2.3.3 Juror Binders

The court can also improve the jury's understanding of the case by providing written information for the individual jurors to take with them to the jury room. The information presented in a patent case can be difficult to digest and remember. Providing jurors with binders containing key information can enhance jurors' memory and their deliberations. *See* Ninth Circuit Jury Trial Improvement Committee, Second Interim Report: Recommendations and Suggested Best Practices, Recommendation X.

The information contained in the binders should include a copy of the preliminary jury instructions. Having a copy of the preliminary instructions enables the jurors to refer back to the rules that guide their conduct and outline their duties during trial. The binders can also be updated with the final jury instructions once they are given so that the jurors will have them as reference during deliberations. The binders can also be used as a tool to aid the jurors' memory. The parties may often refer back to the testimony of certain witnesses. Having photographs of the witnesses in the jury binders will help the jurors remember who the parties are talking about.

In a patent trial, it is also helpful to include copies of the patent at issue so that the jurors may review it during testimony or when otherwise necessary. The meaning of the terms in the patent claims are determined by the court and central to many of the issues the jury must resolve. Accordingly, a copy of the court's claim construction should also be included to assist the jurors' reading of the patent. The patent and the parties' presentations will likely include other technical terminology. It is therefore advisable for the parties to identify and prepare jointly a glossary of technical and legal terms to be included as reference.

Jury instructions, photographs, the patents, and a glossary are relatively nonpartisan items that the parties can agree to include in the jury binders. The inclusion of key trial exhibits can also be helpful to the jury. Reaching agreement on a reasonable set of exhibits to include, however, may be difficult. Individual exhibits can be voluminous, and narrowing down specific exhibits can become contentious as each side will want to ensure its preferred exhibits are included. Identification and inclusion of the principal prior art references can be similarly challenging. If the parties can agree to a reasonable set, then exhibits and prior art should also be included in the binders. Otherwise, it may be best to limit the juror binder items to less controversial information.

8.1.2.3.4 Jury Notetaking

The court should allow, even encourage the jurors to take notes by providing notepads and pencils. Given the length and technical nature of most patent trials, having notes to review will help the jurors understand and remember the case. *See,*

e.g., Ninth Circuit Jury Trial Improvement Committee, Second Interim Report: Recommendations and Suggested Best Practices, Recommendation X. It also helps to focus the jurors' attention during the proceedings.

Juror notes are confidential and should not leave the courtroom during trial. The court should instruct the jury to leave their notes in the jury room when court is not in session. The jurors should also be discouraged from sharing their notes with one another. *See United States v. Balsam*, 203 F.3d 72, 86 (1st Cir. 2000). Notes reflect individual impressions and jurors should not rely on other people's interpretation of the evidence. Indeed, jurors should be admonished not to put too much emphasis on even their own notes. *United States v. Rhodes*, 631 F.2d 43, 46 (5th Cir. 1980); Ninth Circuit Model Jury Instruction 1.11. With proper restrictions in place, however, juror note taking can be a useful and beneficial practice in a patent jury trial.

8.1.2.3.5 Allowing Juror Questions

Courts can also allow jurors to submit questions to improve the jury's level of attentiveness and comprehension during trial. *United States v. Huebner*, 48 F.3d 376, 382 (9th Cir. 1994), *cert. denied*, 516 U.S. 816 (1995). Some courts discourage juror questioning as it risks the jury's neutrality. *See, e.g.*, *United States v. Richardson*, 233 F.3d 1285, 1290 (11th Cir. 2000); *United States v. Ajmal*, 67 F.3d 12, 14 (2d Cir. 1995); *United States v. Sutton*, 970 F.2d 1001, 1005 (1st Cir. 1992); *DeBenedetto v. Goodyear Tire & Rubber Co.*, 754 F.2d 512, 516 (4th Cir. 1985). Allowing questions also risks the jurors' making premature decisions regarding the evidence.

If the court allows juror questioning, it should establish procedures to protect against these concerns. The court can ensure the propriety of juror questions by requiring any questions the jury may have for a witness to be submitted to the court in writing first. *See, e.g.,* Ninth Circuit Model Jury Instruction 1.15. The questions should then be submitted to counsel outside the presence of the jury so that the jury will not attribute any changes to, or rejection of, their questions to a particular party. The court should hear from counsel before deciding whether to ask the question, reject the question, or modify it as appropriate.

The procedures for juror questions, if permitted, should be included in the preliminary jury instructions. The court should make clear that questions should be reserved for extraordinary circumstances, and that numerous questions can slow down proceedings.

8.1.2.3.6 Transition Statements by Counsel to the Jury

The court can allow counsel to make interim statements to the jury to help explain the significance of the evidence and testimony presented. The presentation

of evidence in a jury trial cannot always be organized discretely by the issues the jurors must decide. It can therefore be difficult for jurors to synthesize information and identify the significance of evidence presented, particularly in lengthy and complex cases.

Interim attorney statements can serve as sign posts for the jury, explaining the purpose of testimony and how the evidence fits into a party's overall case. Allowing counsel before or after a witness examination to clarify the purpose of the testimony will help jurors understand the facts. This approach can be especially helpful when there is extensive expert testimony broken up into different infringement and invalidity issues.

To guard against misuse of attorney argument, the court should limit the amount of time the parties can use for such statements and should caution against argument. *See, e.g.,* Ninth Circuit Jury Trial Improvement Committee, Second Interim Report: Recommendations and Suggested Best Practices, Recommendation XV (recommending fifteen minutes per side to use as they wish during trial).

8.1.2.3.7 Jury Education and Tutorials

Because of the complexity of patent and technological issues at play, jury education is a serious concern in patent trials. Not only does the jury have to be educated on the applicable patent law, it must also learn about the technology of the patents involved. To the extent the parties can agree upon neutral tutorials, the court should encourage their use.

As noted in § 7.3.1, the Federal Judicial Center has published a video overview of the patent process, together with a mock sample patent for distribution to prospective jurors. The video is often used as part of the preliminary jury instructions to introduce patent procedure and patent law to the jury. The court should take care to ensure the video is used fairly. It should be shown once in its entirety at the beginning of the trial. In addition, because the video is designed as a non-comprehensive introduction to patent issues, the court should prohibit counsel from using excerpts from it during trial, particularly in argument.

Neutral technology tutorials are harder to come by. Parties are rarely able to prepare and agree upon non-argumentative technology tutorials. Even when the parties agree on a joint tutorial, there is risk that one party is being taken advantage of and the tutorial is not neutral. More often, the parties will insist upon presenting separate tutorials. Competing tutorials are not any more helpful to the jury than having the parties explain the technology through their witness examinations.

8.1.2.4 Special Master, Court-Appointed Expert, or Confidential Advisors

Often in patent litigation a judge needs help understanding the technology involved. The simplest solution is for the parties' attorneys or experts to provide a tutorial on the technology. If this is not sufficient, the court has several means of obtaining more direct expert assistance: appointing a special master, appointing a court expert, or appointing a technical advisor. We previously touched on this topic with regard to claim construction in § 5.1.2.2.2.

A special master renders initial decisions for the court on technical matters. The special master is appointed pursuant to Fed. R. Civ. P. 53 and can hear evidence and argument from the parties and render an initial decision on substantive matters, such as claim construction or summary judgment. The initial decision is made in the form of a report or recommendations, which are provided to the parties and the court. The parties then must be given an opportunity to make objections to the special master's report, and the report and any objections are reviewed by the court. In this process, the court may, but is not required to, receive additional evidence. The court finally adopts, rejects or modifies the special master's report, applying a de novo standard to factual and legal decisions and an abuse of discretion standard to procedural decisions.

A court expert, like party experts, ultimately provides the court with expert testimony to be taken into account along with other evidence in rendering a decision. The court expert is appointed pursuant to Fed. R. Evid. 706 and, as required by that rule, must be provided with initial written instructions by the court. *See generally Regents of the Univ. of Cal. v. Oncor Inc.*, 44 U.S.P.Q.2d 1321, 1335 (N.D. Cal. 1997). After completing an analysis, the expert provides findings to the parties and the court, much like any expert's report. Any party may then depose the expert. Finally, the expert provides the court and, if present, the jury with the results in the form of expert testimony, subject to the same cross-examination as party experts. The Federal Circuit recently affirmed a district court's use of a court-appointed expert pursuant to Fed. R. Evid. 706 in *Monolithic Power Sys., Inc. v. 02 Micro Int'l Ltd.,* 2009 WL 539910 (Fed. Cir. 2009). The district court had allowed the parties to show cause why an expert should not be appointed, allowed the parties to mutually agree on an expert, provided detailed written instructions to the expert, and ordered the expert to make himself available for depositions and examination at trial. In addition, the court allowed the parties to continue to have their own experts and specifically instructed the jury not to assign the court-appointed expert any greater weight. Because the district court properly administered the standards set by Fed. R. Evid. 706, the Federal Circuit held there was no abuse of discretion. The Federal Circuit noted, however, that the "predicament inherent in court appointment of an independent expert and revelations to the jury about the expert's neutral status trouble [the] court to some extent," and admon-

ished that use of court-appointed experts should be limited to the rare and exceptional cases.

A technical advisor functions as an advisor to the judge on technical matters in a manner often analogized to a law clerk, although case law views the analogy as imperfect. The advisor is appointed pursuant to the court's inherent power. It is a power to be used "sparingly," but appointment is proper in any highly technical case where the science or technology is well beyond the experience of the judge. Importantly, if the advisor provides no evidence to the court, Fed. R. Evid. 706 does not apply and as a result the parties have no right to a deposition or other disclosure of the advisor's opinions or communications with the court. Alternatively, a person can be appointed as both a court expert and an advisor, in which case Fed. R. Evid. 706 applies.

Best practices for use of technical advisors are set out in a quartet of appellate court cases: *FTC v. Enforma Natural Products, Inc.*, 362 F.3d 1204, 1213-15 (9th Cir. 2004), *TechSearch LLC v. Intel Corp.*, 286 F.3d 1360, 1378-79 (Fed. Cir. 2002) (applying Ninth Circuit law), *Association of Mexican American Educators v. California*, 231 F.3d 572, 611-14 (9th Cir. 2000) (en banc) (Tashima, J., dissenting), and *Reilly v. United States*, 863 F.2d 149 (1st Cir. 1988). *See generally* § 5.1.2.2.2.1. These cases focus on several procedural aspects of the technical advisor process to assure the technical advisor does not improperly introduce new evidence unknown to the parties or influence the court's resolution of factual disputes. First, the court should assure a fair and open procedure to appoint a neutral advisor. Second, the advisor explicitly should be given a clearly defined, proper role that assures there is no impingement on the court's role as factfinder. Third, the court should provide some assurance that the advisor remains within that proper role. Use of these procedures also facilitates appellate review of the propriety of the technical advisor's role.

To assure fairness in the appointment, the court should identify the proposed advisor to the parties in advance of the appointment. This process can involve inviting the parties to propose advisors, either separately or together after consultation. If the parties are asked to provide potential advisors, the court should establish, in advance, limits on the contact the parties may have with prospective advisors. Alternatively, the court can identify a proposed advisor to the parties—potentially, an advisor the judge worked with previously—without prior consultation. In either case, the parties should be allowed to challenge the advisor's bias, partiality, or lack of qualification. If any challenge is raised, the court should address it on the record.

The proper role of the advisor is to be a sounding board or tutor who aids the judge's understanding of the technology. This includes explanation of the jargon used in the field, the underlying theory or science of the invention, or other technical aspects of the evidence being presented by the parties. The advisor can also assist the judge's analysis by helping think through critical technical problems. In

this latter function, case law admonishes that the court must be careful to assure that the decision making is not delegated to the advisor. Although in form much like the interaction between a judge and law clerk, the situation is different in that, because of a judge's knowledge of law, a clerk cannot usurp the judicial role; in contrast, a technical advisor in an area of science unfamiliar to the judge potentially could.

Within these parameters, the advisor properly can aid the judge's understanding and analysis throughout a patent case. This can include helping the judge understand the patent specification and claims, expert affidavits and testimony provided by the parties, and scientific articles that may be offered as prior art. Proper subjects for consultation with the advisor include whether technical facts are in dispute in a summary judgment motion, claim interpretation, validity and infringement questions, the proper articulation of technical issues for jury instructions, and the admissibility of proffered scientific evidence under *Daubert*. The advisor, however, may not provide evidence, either documentary or testimony, without compliance with Fed. R. Evid. 706. The advisor's advice therefore cannot be based on extra-record information (except the use of technology-specific knowledge and background used to educate the judge) and the advisor cannot conduct any independent investigation. Particularly in situations in which the advisor assists the judge's efforts to resolve factual conflicts, the judge and advisor should be vigilant to avoid the advisor unduly influencing the judge's decision making. In no circumstance, of course, should the advisor become an advocate for any party or position.

The court or advisor should confirm that the advisor's work is done within proper parameters for the benefit of both the parties and appellate review. There is no fixed requirement how this should be accomplished. Proper means include supplying a transcript of the advisor's communications with the judge, providing a report by the advisor of the work performed and any communications had with the judge, or obtaining an affidavit from the advisor at the outset of the work committing to perform within a description of a proper scope of work and procedures (as outlined above) and a second affidavit at the conclusion attesting to compliance with the job description in the initial affidavit.

8.2 General Evidentiary Issues

In every trial, it is inevitable that the court will have to resolve evidentiary issues. The parties may dispute whether a witness's testimony is appropriate, whether certain exhibits should be admitted, and the proper use of demonstratives. In this section, we discuss the typical evidentiary issues that arise in a patent case and the considerations the court should keep in mind when deciding these issues.

8.2.1 Witnesses

8.2.1.1 Patent Law Experts

Parties sometimes propose presenting expert testimony through a patent attorney or former PTO employee regarding patent law, procedures of the PTO, patent terminology, and specific substantive (e.g., anticipation) and procedural (e.g., what a "reasonable patent examiner" would find material) issues. In support of this testimony, parties often point out that the evidence rules specifically permit opinions on ultimate issues (Fed. R. Evid. 704), and the presentation of testimony without first specifying underlying facts or data (Fed. R. Evid. 705).

Testimony on issues of law by a patent law expert—as contrasted with a general description of how the patent process works—is usually deemed inadmissible. Just as in any other field, it is exclusively for the court, not an expert, to instruct the jury regarding underlying law. *See, e.g.*, *Burkhart v. Wash. Metro. Area Transit Auth.*, 112 F.3d 1207, 1213 (D.C. Cir. 1997). Testimony regarding the procedures and terminology used in patents and file histories, on the other hand, often is allowed. *See, e.g.*, *Bausch & Lomb, Inc. v. Alcon Labs., Inc.*, 79 F. Supp. 2d 252, 255-58 (W.D.N.Y. 2000). In many cases, however, this testimony might be redundant in light of the Federal Judicial Center video on patent office procedures, described above, or in light of a preliminary jury instruction explaining those procedures.[1] Because the video or a jury instruction is likely to be more neutral, they usually will be preferable means of providing this information to the jury. The video or an instruction, however, may lack sufficient specificity to explain a PTO procedural event relevant in a particular case, and in that circumstance, expert testimony is more likely to be appropriate and helpful to the jury.

The admissibility of proffered patent expert testimony on ultimate issues will often depend on whether the expert is doing anything more than applying patent law to a presumed set of facts, essentially making the jury's determination. This particularly is true if the proffered patent expert has no relevant technical expertise. Thus, a patent expert's opinion regarding such matters as infringement, obviousness, and anticipation based upon technical conclusions that are assumed or provided by a different expert is usually improper. Similarly, testimony applying patent law to issues intertwined with patent procedure, but dependent upon technical conclusions supplied by others, such as the appropriate priority date of a claim in a continuation application, is usually inappropriate. On the other hand, if the patent expert also has relevant technical expertise, she should be equally able to provide expert testimony within that expertise as would be any non-legal expert with similar technical expertise.

---

1. The District of Delaware uses the video exclusively and prohibits testimony on PTO procedure.

In trials to the court, when there is no concern regarding jurors' over-reliance on expert testimony, courts more freely admit the testimony of patent law experts. This includes, for example, testimony regarding whether a reasonable patent examiner would deem particular prior art or statements important in an inequitable conduct determination. Courts have found such testimony helpful and allowed it. *See, e.g.*, *Bristol-Myers Squibb Co. v. Rhone-Poulenc Rorer, Inc.*, 326 F.3d 1226, 1238 (Fed. Cir. 2003); *PerSeptive BioSystems, Inc. v. Pharmacia Biotech, Inc.*, 12 F. Supp. 2d 69, 74 (D. Mass. 1998), *aff'd*, 225 F.3d 1315 (Fed. Cir. 2000).

Finally, testimony is sometimes offered regarding the abilities of patent examiners, their work loads, time spent on applications, or similar matters. This testimony, which is meant to bolster or undermine the statutory presumption of validity, is improper. § 282; *see also Applied Materials, Inc. v. Advanced Semiconductors Materials Am., Inc.*, No. 92-20643, 1995 U.S. Dist. LEXIS 22335 (N.D. Cal. Apr. 25, 1995). The deference the jury should give to the actions of the patent examiners is an issue of law like any other. *See A & L Tech. v. Resound Corp.*, Case No. C 93-00107 CW, 1995 U.S. Dist. LEXIS 22443, at * 11 (N.D. Cal. 1995) ("As a matter of law, a patent examiner is presumed to have conducted her own independent analysis of the prior art and drawn her own conclusions."); *see also Al-Site Corp. v. VSI Int'l Inc.*, 174 F.3d 1308, 1323 (Fed. Cir. 1999); *Am. Hoist & Derrick Co. v. Sowa & Sons, Inc.*, 725 F.2d 1350, 1359 (Fed. Cir. 1984). The appropriateness of that deference is not an issue for jury resolution.

8.2.1.2 Inventor and Other Technical Party Employee Testimony

Inventors and other technical employee witnesses often testify at trial regarding the invention and other technical matters. These witnesses frequently qualify as experts, and if properly disclosed as testifying experts, appropriately may provide expert testimony. Because their duties likely do not "regularly involve giving expert testimony," no expert report is required by such employees absent special order; however, ordering such a report usually is appropriate. *See* Fed. R. Civ. P. 26(a)(2)(B).

If inventors and other technical employees are not disclosed as experts, difficult line-drawing can arise regarding their testimony. For example, when an inventor or co-employee testifies regarding the invention to a jury, it usually is necessary to accompany the testimony regarding historical acts with explanation of the technology involved. These explanations are sometimes challenged as undisclosed expert testimony. Other testimony that often draws a challenge is inventor or employee testimony regarding the nature of the prior art at the time the invention was made. While testimony about the invention and about the prior art may be highly technical, it may involve the description of historical facts without the expression of opinion. In that event, the testimony is proper without expert disclosure. Such testimony, however, is sometimes employed to attempt to introduce

undisclosed opinion testimony. A similar issue is presented by testimony aimed at teaching the relevant science to a jury; this, too, may be appropriate testimony without expert disclosure, but also is an opportunity sometimes used to attempt to introduce undisclosed expert testimony.

8.2.2 Exhibits

Due to the technical nature of patent cases, the number of potential exhibits can be substantial. Parties tend to be over-inclusive with their exhibit lists to minimize the risk that they will later be precluded from using a particular document during trial. A final decision on whether an exhibit will be used is often not made until the middle of trial. The sheer volume of exhibits makes it difficult for the parties and the court to arrive at any meaningful refinement of exhibits prior to trial.

In general, resolving all evidentiary issues and pre-admitting exhibits prior to trial saves trial time and reduces the burden on the jurors who would otherwise have to wait while the court resolves exhibit disputes with the parties. One way the court can achieve this end is by placing the burden of agreeing upon exhibits on the parties. The court can deem all exhibits admitted, unless a party raises specific objections with the court in advance of trial. The burden of having to articulate specific and defensible objections to the court often compels parties to act reasonably when conferring with the opposing side, leaving only genuine disputes for the court.

This approach, however, requires the parties and the court to expend a significant amount of time deciding the admissibility of an exhibit that the parties may ultimately never use at trial. Another approach is to defer decision on exhibits until a party intends to introduce them. The court should have the parties adopt an exhibit disclosure schedule that provides enough time for the parties to confer over objections and raise issues with the court in advance. Typically, a party should identify the exhibits it intends to use two days in advance, giving the court a day to consider the issue if the parties cannot resolve it on their own.

A copy of any exhibits admitted into evidence should be provided to the jurors during deliberations. The court should keep a record of exhibits admitted into evidence and order the parties to prepare a set for the jury room.

8.2.3 Demonstratives

Demonstratives can be especially useful tools in patent cases. They help the parties explain background technology to the court and the jury. Because demonstratives are not evidence, however, they are not admitted into the record and do not need to meet admissibility requirements. There must, nonetheless, be a foundation for the use of demonstratives. Specifically, demonstratives can be used if

they are fair representations and assist the jury in understanding a witness's testimony.

A court has broad discretion in managing the use of demonstratives. A court can preclude the use of a demonstrative if its utility in illustrating concepts to the jury is outweighed by the risk of unfair prejudice, confusion to the jury, or undue delay of time. Fed. R. Evid. 403. As with exhibits, the court should require the parties to exchange demonstratives in advance of their intended use in court. If the parties cannot resolve any objections, the court can then decide whether any proposed demonstratives advance inappropriate arguments or are unduly prejudicial before they are presented to the jury.

Because demonstratives are not evidence, they are excluded from the jury room during deliberations. A party may, on occasion, ask that a demonstrative be admitted into evidence. Courts have discretion to admit into evidence demonstratives that summarize admissible evidence. Fed. R. Evid. 1006. The court should encourage the parties to confer about what demonstratives can be admitted into evidence.

8.2.4 Limits on Attorney Argument

Because patent trials typically are longer and more complex than most other cases, the court should take proactive measures to discourage the parties from prolonging trial with unnecessary and contentious arguments. Due to the massive amounts of evidence involved in patent cases, disputes over arguments and objections to evidence during trial is unavoidable. The court can, however, make efforts to minimize side bars and improper attorney argument.

To discourage extended attorney argument while the jury is present, the court should charge any time spent in sidebars and arguing objections to the party that loses the argument. The court should also remind the parties to refrain from extended argument when making objections. Giving the parties an outlet to make interim attorney arguments can reduce the likelihood that they will make improper or protracted arguments at other times during the trial.

During the course of a witness's testimony, a party may object to a particular subject of examination. The court should encourage the examining party to focus on another topic, if possible, until the jury is released. The court can then resolve the issue with the parties without wasting the jury's time.

8.3 Specific Substantive Issues

In addition to general evidentiary issues, patent trials present the court with substantive issues unique to patent law. The court must be familiar with considerations that arise in the context of proving infringement or invalidity. The patent law also provides a patent owner with remedies other than compensatory damages

that are within the court's discretion to award. This section will discuss substantive proof issues that the court should be aware of when presiding over a patent trial.

8.3.1 Indirect Infringement

Patent infringement must be proven by a preponderance of evidence. The Federal Circuit requires proof of infringement to include an element-by-element analysis for each asserted claim in the patent and the accused product. In many patent cases, patent owners not only allege direct infringement, but that a defendant contributes to or induces another's infringement. The direct infringement underlying a contributory infringement or inducement claim is usually committed by a nonparty to the action. Disputes can arise during trial as to whether the evidence of the underlying direct infringement is sufficient to submit the issue to the jury.

While there must be evidence of underlying direct infringement, a nonparty's direct infringement can be proven through direct or circumstantial evidence. *Moleculon Research Corp. v. CBS, Inc.*, 793 F.2d 1261, 1271 (Fed. Cir. 1986). Circumstantial evidence of the indirect infringer's sales and dissemination of instructions for operation in an infringing manner can support a finding of direct infringement by customers. *Id.* Furthermore, there need not be evidence showing that every customer infringes; it is sufficient that the patentee present evidence from which the jury can infer that at least one customer directly infringes.

Inducement of infringement also requires proof that the alleged infringer intended to induce infringement by others. Proof of intent can be inferred from the conduct of the alleged infringer. As a result, evidence that may otherwise be prejudicial for purposes of proving infringement may be admissible to show intent. The court should take care to give limiting instructions explaining the purpose of certain evidence.

8.3.2 Invalidity

8.3.2.1 Presumption of Validity

Like infringement, proof of invalidity must include an element-by-element analysis. Invalidity, however, must be shown by clear and convincing evidence as the law provides that patents are presumed valid. § 282. This is often phrased as requiring evidence that convinces the trier of fact that it is "highly probable" that the patent is invalid. *See, e.g.*, *Buildex, Inc. v. Kason Indus., Inc.*, 849 F.2d 1451, 1463 (Fed. Cir. 1988).

The jury does not have the discretion to disregard the presumption of validity. During trial, it is the alleged infringer's burden to present evidence and argue that the presumption is rebutted. A party cannot argue that the presumption

should not apply. *See Am. Hoist*, 725 F.2d at 1360 (stating that the statutory presumption of validity imposes a burden that "is constant and never changes and is to convince the court of invalidity by clear evidence."); *cf. KSR Int'l Co. v. Teleflex, Inc.*, 127 S. Ct. 1727, 1745 (2007) (noting in dicta that the rationale underlying the presumption of validity seems diminished where the prior art in question was not disclosed to the PTO during prosecution).

Where the prior art in question was before the PTO during prosecution, the patent holder will argue that the presumption of validity is "especially difficult" to rebut. *See Glaxo Group Ltd. v. Apotex, Inc.*, 376 F.3d 1339, 1348 (Fed. Cir. 2004). Where the prior art in question was not considered by the PTO during prosecution, the alleged infringer will argue that the presumption carries little weight. The burden of proof remains the same regardless of whether the prior art reference was before the PTO during prosecution. Therefore, in both circumstances, the court should instruct the jury that an alleged infringer has the burden of presenting clear and convincing evidence before a patent can be found invalid.

8.3.2.2 Obviousness

Claims of invalidity based on obviousness, in particular, often raise unique issues that require court resolution during trial. The ultimate conclusion of obviousness is a question of law, but it is premised upon underlying findings of fact. *KSR Int'l, Co. v. Teleflex, Inc.*, 127 S. Ct. 1727, 1745 (2007) ("The ultimate judgment of obviousness is a legal determination."). Thus, while the ultimate conclusion rests with the court, resolution of the factual inquiries rests with the jury. The most common factual questions, known as the *Graham* factors, are: (1) the scope and content of the prior art; (2) the differences between the prior art and the claims at issue; (3) the level of ordinary skill in the art; and (4) objective evidence of nonobviousness. *Graham v. John Deere Co.*, 383 U.S. 1, 17-18 (1966). Establishing trial procedures that will assist the court in rendering a decision on obviousness will help to resolve later disputes regarding the propriety of the jury's verdict on obviousness.

The Federal Circuit has held that submission to the jury of a question of law that is based on underlying facts, like obviousness, is proper when accompanied by appropriate instructions. *White v. Jeffrey Mining Co.*, 723 F.2d 1553, 1558 (Fed. Cir. 1983). Many courts follow this course in determining obviousness. When the jury is asked to determine obviousness, it is preferred that the jury be provided with special interrogatories regarding the *Graham* factors relevant to the case so that the jury's underlying factual findings are known. *See Agriazp, Inc. v. Woodstream Corp.*, 520 F.3d 1337, 1343 n.3 (Fed. Cir. 2008). With the benefit of the answers to the special interrogatories, the district court on a renewed motion for judgment as a matter of law and the Federal Circuit on appeal can then review the

jury's ultimate conclusion on obviousness in light of its underlying factual determination.

Formulating special interrogatories regarding all the relevant *Graham* factors sometimes can be difficult, for example, if multiple prior art references are asserted in multiple combinations. Because the alleged infringer usually will greatly prefer submitting special interrogatories to the jury, however, it generally is possible to negotiate with the parties a manageable number of special interrogatories for submission.

Alternatively, the court can submit only the relevant *Graham* factors to the jury for its determination through special interrogatories, with or without an advisory verdict on the legal question of obviousness, and then determine the ultimate question of obviousness itself based on the jury's factual determinations. The model instructions of the Northern District of California (*see* Instruction No. 4.3b),[2] for example, adopt this approach.

8.3.3 Patent Damages

The patent statute provides for a range of remedies for a patent's infringement. A patent owner is entitled to monetary damages to compensate for the infringement, as well as to the court's consideration of equitable remedies to prevent further infringement. In cases of willful infringement, the court has further discretion to increase damages to punish the infringer. Each of these remedies presents unique issues for the court.

The jury has wide discretion in awarding monetary damages. The patent statute provides that a patent owner is entitled to damages no less than a reasonable royalty. § 284. The court may be called upon during trial to resolve disputes as to whether a patent owner's proof of damages is sufficient.

A patent owner can recover lost profits or a reasonable royalty, or some combination of both. Proof of lost profits requires evidence of the extent of any non-infringing alternatives that may exist in the market. The Federal Circuit has warned against allowing damages analyses to turn into separate full-blown infringement analyses on numerous other collateral products. *See Micro Motion, Inc. v. Kane Steel Co.*, 894 F.2d 1318, 1324 (Fed. Cir. 1990). Thus, while there needs to be at least some circumstantial evidence of the absence of non-infringing alternatives, such evidence need not include testimony by technical experts. *Dow Chem. Co. v. Mee Indus.*, 341 F.3d 1370, 1372 (Fed. Cir. 2003); *Northlake Mktg. & Supply, Inc. v. Glaverbel, S.A.*, 72 F. Supp. 2d 893, 898-99 (N.D. Ill. 1999). The question for the court is whether there is some evidence from which a jury can rea-

2. The Northern District of California's Model Patent Jury Instructions are available on line at <http://www.cand.uscourts.gov/cand/ForAttys.nsf/d07d1927bb07c86c88256d6e005ce658/4ed41e5a5972b27a88256d6e005cee5d/$FILE/NDmodel.101007.pdf>.

sonably infer that there are no non-infringing alternatives, and that lost profits are appropriate. Inventor testimony and claim charts, evidence that the alleged infringer failed to switch to non-infringing alternatives, and customer motivation to purchase the patented features have all been held sufficient. *Standard Havens Prods., Inc. v. Gencor Indus., Inc.*, 953 F.2d 1360, 1373 (Fed. Cir. 1991); *Kaufman Co. v. Lantech, Inc.,* 926 F.2d 1136, 1141-42 (Fed. Cir. 1991); *Datascope Corp. v. SMEC, Inc.*, 879 F. Supp. 820, 825 (Fed. Cir. 1989) (inventor testimony and claim charts sufficient for jury to infer that substitutes were infringing).

There are further complications when a patentee's damages are based on indirect infringement, that is the use of the patented invention by the alleged infringer's customers, particularly when the accused product is capable of non-infringing modes of operation. To recover damages based on use by customers, there need not be a one-to-one correspondence between the number of accused products sold and direct infringement by customers. *Hilgraeve, Inc. v. Symantec Corp.*, 272 F. Supp. 2d 613, 621 (E.D. Mich. 2003); *Imagexpo, L.L.C. v. Microsoft Corp.* 284 F. Supp. 2d 365, 370 (E.D. Va. 2003); *Black & Decker v. Bosch,* 2006 U.S. Dist. LEXIS 94556, *6 (N.D. Ill. 2006). The patent owner, however, must present evidence sufficient for a jury to extrapolate or infer the extent of the customers' direct infringement. *Imagexpo*, 284 F. Supp. 2d at 370.

8.4 Motions for Judgment as a Matter of Law

As in any jury trial, once a party has completed its case-in-chief as to an issue, the party's opponent can move for judgment as a matter of law as to the issue. Fed. R. Civ. P. 50. Judgment will be denied if, "viewing the evidence in the light most favorable to the non-moving party, and giving the non-movant the benefit of all reasonable inferences, there is sufficient evidence of record to support a jury verdict in favor of the non-movant." *Honeywell Int'l Inc. v. Hamilton Sundstrand Corp.*, 370 F.3d 1131, 1139 (Fed. Cir. 2004) (en banc). These motions and their appellate implications, however, take on special significance in patent cases where each side has important claims and defenses as to which it bears the burden of proof, and where claim construction issues often play a pivotal role.

The Federal Circuit applies the usual rule that, absent a Rule 50 motion before the case is submitted to the jury specifically addressed to an issue, no argument can be made in post-trial motions or on appeal that the evidence is insufficient to support the jury's verdict as to that issue. *Duro-Last, Inc. v. Custom Seal, Inc.*, 321 F.3d 1098, 1105-09 (Fed. Cir. 2003). The specificity of the pre-deliberations motion must be sufficient to alert the opponent as to the evidence that is omitted so that, if necessary, it may seek to reopen and provide that evidence. In the patent law context, this means, for example, that a Rule 50 motion by a patent owner must specify the particular claim or claims as to which it asserts no infringement has been proven, and a patent owner must specify the particular invalidity bases it

asserts have not been proven. *Duro-Last*, 321 F.3d at 1105-09; *Union Carbide Chems. & Plastics Tech. Corp. v. Shell Oil Co.*, 308 F.3d 1167, 1187 (Fed. Cir. 2002); *Sw. Software, Inc. v. Harlequin Inc.*, 226 F.3d 1280, 1290 (Fed. Cir. 2000).

For example, a motion made before the jury retires addressed to the defenses of inequitable conduct and the on-sale bar will not preserve a post-trial Rule 50 motion or appeal argument that the evidence failed to support the alleged infringer's obviousness defense. Similarly, a motion made before the jury retires as to one claim of a patent does not preserve a post-trial motion or appeal argument that the evidence failed to support infringement of another claim.

8.5 Jury Deliberations

Once the case is submitted to the jury for deliberations, there is little for the court or the parties to do except to reduce the hardship on the jury and make sure it has all the information it needs to make its decision.

8.5.1 Schedule of Deliberations

While the jury is deliberating, court is not in session. Therefore, the court should be open to modifying the daily schedule for deliberations to meet the needs of the jurors. There is no longer the need to maintain time outside the jury's presence to resolve legal issues. Therefore, if the jurors agree, the court can allow full-day deliberations even when trial proceeded on a half-day schedule. The jurors, however, should be informed that they are under a continuing duty to serve and the court should not adopt irregular schedules.

In multi-phase trials, issues are usually phased to separate presentation of issues to prevent jury confusion. If the jury did not deliberate until all phases were conducted, that would defeat much of the purpose of separating the proceedings. The jury should deliberate immediately after each phase of the trial.

8.5.2 Claim Construction Considerations

Jury deliberations are restricted to issues of fact. Therefore, the court should make clear that the jury is not to make any determination regarding claim construction. *Markman v. Westview Instr., Inc.*, 52 F.3d 967, 976 (Fed. Cir. 1995), *aff'd*, 517 U.S. 370 (1996). Indeed, the parties cannot even argue claim construction disputes to the jury. *Cytologix Corp. v. Ventana Med. Sys., Inc.*, 424 F.3d 1168, 1172 (Fed. Cir. 2005). Claim construction arguments may confuse jurors and lead them to believe they should be making claim construction determinations. The court should instruct the jury on the proper construction of claims and emphasize that it is bound by the court's construction. *Structural Rubber Prods. Co. v. Park Rubber*, 749 F.2d 707, 723 (Fed. Cir. 1984).

8.5.3 Jury Access to Evidence

During deliberations the jurors may need additional information to arrive at a decision, whether it be access to exhibits, testimony, or further instructions on the law. All juror communications should be conducted through the courtroom deputy in writing, with requests passed on to the judge. Before acting on any request, the court should inform the parties and allow them to be present.

8.5.3.1 Exhibits and Demonstratives

As noted above, access to evidence admitted during trial can assist the jurors in their deliberations. A copy of the exhibits introduced at trial should be provided to the jurors in the jury room. Demonstratives, however, are not evidence. Therefore, the jurors should not be given access to them. Only demonstratives admitted into evidence as an exhibit during trial should be considered by the jurors during deliberations.

8.5.3.2 Testimony

As memories fade and disagreement may arise between jurors regarding a witness's testimony, jurors may sometimes request to have testimony read during deliberations. While allowing testimony to be read to the jury is in the court's discretion, the practice can be problematic and should not be exercised routinely. *See Dabney v. Montgomery Ward & Co., Inc.*, 761 F.2d 494, 499 (8th Cir. 1985); *Mayeaux v. Am. Mut. Liberty Ins. Corp.*, 409 F.2d 508, 509 (5th Cir. 1969).

Unlike exhibits, which are complete and available in their entirety for review, reading portions of testimony is incomplete and may give a skewed presentation of evidence. It becomes difficult to draw the line as to what testimony should be read to the jury. Jurors are often unable to articulate clearly what specific testimony they are interested in, which can lead to requests for testimony on broad subject matters. Catering to such requests is neither practical nor helpful.

Testimony should be read to jurors only in circumstances when the jurors can identify the specific testimony in which they are interested to resolve a disagreement between the jurors. In such cases, the parties should be informed of the request and the court should consider counsels' request to have other portions of testimony read for fairness.

8.5.3.3 Juror Questions During Deliberations

Questions may arise during jury deliberations. The court should be wary of providing answers to requests for factual information, and should only do so in

the presence of and after consultation with the parties. Fact finding is reserved for the jury, and neither the court nor the parties should usurp that role.

Courts are duty bound to provide jurors with further legal instructions when requested to do so. The court should inform the parties of the question and give the parties an opportunity to jointly propose an appropriate instruction. It may be appropriate to give additional instructions or clarifying instructions to provide a full and fair response. Care should be taken, however, to avoid over-instructing and confusing the jury.

8.5.4 Verdict Forms

8.5.4.1 General Verdict Forms

Use of general verdict forms in patent cases is discouraged. The jury is charged with deciding several interrelated and complex issues. General verdict forms do not assist the jury in understanding the applicable law and maintaining consistency in its findings. A general verdict is inseparable; a single error completely destroys it. *Richardson-Vicks v. Upjohn Co.*, 122 F.3d 1476, 1485 (Fed. Cir. 1997). As a result, a significant amount of resources is spent reviewing decisions made by general verdict.

8.5.4.2 Special Verdict Forms and Special Interrogatories

The court can help guide the jury in proper application of the law and ensure consistency in its findings by using special verdict forms. Fed. R. Civ. P. 49(a). Special verdicts require a jury to make specific findings of fact from which the court applies the applicable law. Patent cases are particularly well suited for special verdicts. *Richardson-Vicks*, 122 F.3d at 1485, *citing Warner-Jenkinson Co. v. Hilton Davis Chem. Co.*, 520 U.S. 17, 39 (1997). For example, if the jury finds that an independent claim of a patent is not infringed, then it cannot find the dependent claims infringed. Use of a special verdict form allows the court to ensure consistency between findings on independent and dependent claims. A model sample verdict form for patent cases is now available as Appendix C.3 to the Model Patent Jury Instructions for the Northern District of California.

A court can also use a general verdict form with special interrogatories. Fed. R. Civ. P. 49(b). Use of special interrogatories differs from special verdicts only in that the jury, rather than the court, makes the ultimate decision when general verdicts with special interrogatories are used. There is still risk that the jury will make a decision inconsistent with its findings. In such cases, the Federal Rules permit the court to enter judgment consistent with the jury's findings notwithstanding the verdict. *Id.* Where the findings are inconsistent and do not support the verdict, the court can recall the jury for further consideration or order a new trial.

8.6 Bench Trials

A court may try a patent case without a jury where the parties have waived the right to a jury trial or when equitable issues have been bifurcated for the court's consideration. Waiver is rare. Most often bench trials are held to try equitable defenses such as inequitable conduct, laches, and estoppel.

As the court is the factfinder in bench trials, there is less of a need for extensive judicial management. The court must make specific findings of facts and conclusions of law when rendering its decision. Fed. R. Civ. P. 52. It can, however, be less stringent with issues of admissibility and evidentiary objections as it is both the arbiter of those issues and the ultimate factfinder. There is less of a concern that the court will be prejudiced by certain evidence.

Chapter 9
Post-Trial

9.1 Entry of Judgment
9.2 Post-Trial Motions
9.2.1 Permanent Injunctions
9.2.1.1 Issuing a Permanent Injunction
9.2.1.2 Ongoing Royalty After Denial of a Permanent Injunction
9.2.2 Enhanced Damages
9.2.2.1 Timing
9.2.2.2 Standard
9.2.3 Attorney Fees
9.2.3.1 Timing
9.2.3.2 Standard
9.2.4 Motion for a New Trial
9.3 Appeal
9.3.1 Stay of Injunction Pending Appeal
9.3.2 Remands
9.3.3 Renewed Motion for Judgment as a Matter of Law

The court's duties do not cease after a verdict is rendered. Even following entry of judgment, the court is responsible for resolving post-trial motions and issues relating to appeal. This chapter examines the post-trial considerations that courts face in patent trials.

9.1 Entry of Judgment

In patent cases, as in every case, after a jury renders its verdict or after the court makes its decision, judgment must be entered. The Federal Rules require that every judgment be entered in a separate document to make clear when the time to file post-trial motions and appeal begins to run. Fed. R. Civ. P. 58. The clerk may enter judgment when a jury returns a general verdict. Where special verdicts are used, the court, not the clerk, must enter the judgment.

The court has some flexibility in the timing for entry of judgment. One option is to enter judgment in accordance with the jury's verdict soon after the verdict is rendered. While the verdict may be altered by resolution of post-trial motions, the court's ruling on the post-trial motions need not be entered in a separate document. Fed. R. Civ. P. 58(a)(1). Therefore, early entry of judgment leads to quicker resolution of post-trial motions, without the need for additional administrative duties by the court.

In cases of willful infringement, however, the patent owner will likely move for enhanced damages. Judgment entered on the verdict will need to be amended in a separate document should the court decide to increase damages. In such cases, it may be more efficient to set a briefing schedule with the parties for post-trial motions, as well as motions for enhanced damages, prejudgment interest, and attorney fees. Once all motions are resolved, the court can then enter one judgment that reflects the verdict and the rulings on post-trial motions. *Larez v.*

that reflects the verdict and the rulings on post-trial motions. *Larez v. City of Los Angeles*, 946 F.2d 630, 636 (9th Cir. 1991) (noting that the Federal Rules prohibit filing post-trial motions before entry of judgment); *Dunn v. Truck World, Inc.*, 929 F.2d 311, 313 (7th Cir. 1991) (same).

9.2 Post-Trial Motions

In patent cases, as in most cases, trial is usually followed by a series of post-trial motions. Where there is a finding of infringement, patent owners almost always seek a permanent injunction. In cases of willful infringement the patent owner will also typically move for enhanced damages. Because the patent statute authorizes the award of attorneys' fees in exceptional cases, motions for attorneys' fees are also often the subject of post-trial motions. In addition, parties will likely bring motions for judgment as a matter of law and/or new trial motions on the liability issues. In this section, we discuss the particular considerations that arise in conjunction with these post-trial motions in patent cases.

9.2.1 Permanent Injunctions

In addition to monetary relief, many patentees seek entry of a permanent injunction after a finding of infringement. *See* § 283 ("[A court] may grant injunctions in accordance with the principles of equity to prevent the violation of any right secured by patent, on such terms as the court deems reasonable."). Historically, courts have entered injunctions automatically following an infringement finding. Following the Supreme Court's decision in *eBay Inc. v. MercExchange, L.L.C.*, 547 U.S. 388, 391-92 (2006), however, a court must make explicit findings before issuing a permanent injunction.

9.2.1.1 Issuing a Permanent Injunction

Specifically, an injunction should issue only when (1) the plaintiff has suffered an irreparable injury; (2) remedies at law, such as monetary damages, are inadequate to compensate for that injury; (3) a remedy in equity is warranted considering the balance of the hardships between the plaintiff and defendant; and (4) the public interest would not be disserved by a permanent injunction. *Id.* at 391.

Courts will usually have little trouble making these findings and issuing an injunction in cases between direct competitors. *See, e.g., Smith & Nephew, Inc. v. Synthes (U.S.A.)*, 466 F. Supp. 2d 978, 983 (W.D. Tenn. 2006); *TiVo v. EchoStar Commc'ns Corp.*, 446 F. Supp. 2d. 664, 669 (E.D. Tex. 2006); *Black & Decker Inc. v. Robert Bosch Tool Corp.*, No. 04 C 7955, 2006 U.S. Dist. LEXIS 86990, *11 (N.D. Ill. Nov. 26, 2006); *Wald v. Mudhopper Oilfield Servs., Inc.*, No. CIV-04-1693-C, 2006 U.S. Dist. LEXIS 51669, *15 (W.D. Okla. 2006). A permanent in-

junction is an appropriate way to recognize the high value of intellectual property when it is asserted against a direct competitor in the patentee's market. *See, e.g., O2 Micro Int'l v. Beyond Innovation Tech. Co.*, 2007 U.S. Dist. LEXIS 25948, *6-10 (E.D. Tex. Mar. 21, 2007), *vacated*, 521 F.3d 1351 (Fed. Cir. 2008). Following the *eBay* decision, permanent injunctions have been denied only in cases where the patentee merely licensed its technology and did not offer its own commercial embodiment, or where the scope of the requested injunction was overly broad. *See, e.g.*, *Praxair, Inc. v. ATMI, Inc.*, 479 F. Supp. 2d 440, 442-44 (D. Del. 2007) (proposed injunction required defendant to recall products already sold to third parties); *Sundance, Inc. v. DeMonte Fabricating Ltd.*, 2007 U.S. Dist. LEXIS 158 (E.D. Mich. Jan. 4, 2007); *z4 Techs., Inc. v. Microsoft Corp.*, 434 F. Supp. 2d 437, 440-41 (E.D. Tex. 2006); *Voda v. Cordis Corp.*, 2006 U.S. Dist. LEXIS 63623 (W.D. Okla Sept. 5, 2006). Where the jury's damages award includes monetary compensation for future infringing sales, however, a patent holder cannot show irreparable harm. *Innogenetics, N.V. v. Abbott Labs.*, 512 F.3d 1363, 1380 (Fed. Cir. 2008).

Table 9.1 summarizes how courts have applied the facts presented in cases since the *eBay* decision to the four-factor test for issuing permanent injunctions:

Table 9.1
Permanent Injunction Considerations

***eBay* Factor**	**Facts Tending to Establish *eBay* Factor**	**Facts Insufficient to Establish or Weighing Against *eBay* Factor**

Irreparable Harm	• Infringer is direct competitor
	  ○ Loss of market share due to infringement by direct competitor
	  ○ Price erosion due to direct competition by infringer
	  ○ Harm to goodwill or reputation as innovator due to presence of infringer in the market
	• Patent holder's decision not to license or attempt to license patent to the infringer
	• Economic harm suffered by licensees of research institutes and universities; adverse effect on institution's ability to license intellectual property to finance further research and development
		• Loss of licensing revenue by a patent holder that does not practice the invention
		• Award of money damages to patent holder that includes compensation based on future sales of infringing product

Table 9.1
Permanent Injunction Considerations, *continued*

***eBay* Factor**	**Facts Tending to Establish *eBay* Factor**	**Facts Insufficient to Establish or Weighing Against *eBay* Factor**
Inadequate Remedy at Law	• Loss of market share, harm to reputation, price erosion • Infringer's lack of U.S. assets with which to satisfy judgment for money damages • Patent holder's refusal to grant license and its engagement in lengthy litigation to protect that business decision	• Right to exclude granted by the patent • Loss of bargaining leverage by patent holder that does not practice the invention • Patent holder's willingness to license the patent to the infringer
Balance of Hardships Favors Injunction	• Infringing product is but one of many products offered by infringer • Infringer's ability to offer a design around • Where infringer is direct competitor, loss of right to exclude is a greater hardship than loss to infringer from interruption of its business	• Patented feature is but a small component of the infringing product • Harm to infringer that practices invention is greater than harm to licensing business of non-practicing patent holder
Public Interest Favors Injunction	• Public interest served by enforcement of patents	• Lower prices for public access to pharmaceuticals not sufficient • Harm failing to rise to level of adverse public health consequences

9.2.1.2 Ongoing Royalty After Denial of a Permanent Injunction

Consideration of the four permanent injunction factors articulated in *eBay* does not always end the inquiry. Where a court determines that a permanent injunction is not warranted, it must also determine an appropriate ongoing royalty for the infringer's continued use of the patented invention (unless the jury explicitly awarded damages under a fully paid-up lump sum}.

In setting an ongoing royalty in lieu of a permanent injunction, "the district court may wish to allow the parties to negotiate a license amongst themselves regarding future use of a patented invention." *Paice LLC v. Toyota Motor Corp.*, 504 F.3d 1293, 1315 (Fed. Cir. 2007). In the event the parties are unable to reach an agreement, the court may impose an ongoing royalty. There is no Seventh

Amendment right to have a jury determine the issue of an ongoing royalty. *Id.* at 1316. Indeed, a court is not even bound by the jury's determination of a reasonable royalty in setting an ongoing royalty. *Amado v. Microsoft Corp.*, 517 F.3d 1353, 1361-62 (Fed. Cir. 2008). This is because, as the Federal Circuit has recognized, there is a difference between a reasonable royalty for pre-verdict infringement and damages for post-verdict infringement, given the change in the parties' legal relationship and other economic factors. *Id.* Where the jury's royalty damages award includes a running royalty for future sales, however, a court should base the ongoing royalty on the jury's determination. *Innogenetics, N.V. v. Abbott Labs.*, 512 F.3d 1363, 1380-81 (Fed. Cir. 2008). In any event, the court should provide a reasoned explanation for any ongoing royalty it imposes. In particular, the court may take additional evidence to account for any additional economic factors relevant to establishing a royalty for ongoing use of the patented invention post-verdict. *Paice*, 504 F.3d at 1315.

9.2.2 Enhanced Damages

The patent statute authorizes a court to increase a damages award up to three times. 35 U.S.C. § 284. Increased damages may be awarded only in cases of willful infringement or bad faith. *Beatrice Foods Co. v. New England Printing & Lithographing Co.*, 923 F.2d 1576, 1578 (Fed. Cir. 1991) (citing *Yarway Corp. v. Eur-Control USA, Inc.*, 775 F.2d 268, 277 (Fed. Cir. 1985)). A court is not required, however, to enhance damages even if the jury finds willfulness by clear and convincing evidence. *Electro Scientific. Indus. v. Gen. Scanning, Inc.*, 247 F.3d 1341, 1353 (Fed. Cir. 2001). Thus, an award of enhanced damages remains in the sound discretion of the court. *Id.*

9.2.2.1 Timing

Naturally, damages can be increased only after damages and willfulness have been determined, and after the court has had the opportunity at trial to determine whether litigation has been conducted in bad faith. Courts can be inundated with various motions after a verdict is returned. Therefore, the court should set a briefing schedule for a motion for enhanced damages, as well as post-trial motions, following the jury's verdict.

A motion for enhanced damages can be brought before or after entry of judgment. If brought after entry of judgment, the court should amend the judgment to reflect any increased damages. It is often more manageable to consider an enhanced damages motion at the same time as post-trial motions. The court's ruling on post-trial motions can affect the amount of enhancement. In addition, ruling on all the motions together allows the court to enter a single judgment reflecting all its rulings.

9.2.2.2 Standard

The decision of whether to enhance damages is based on the egregiousness of the infringer's conduct in light of the totality of the circumstances. *Jurgens v. CBK, Ltd.*, 80 F.3d 1566, 1570 (Fed. Cir. 1996); *Read Corp. v. Portec, Inc.*, 970 F.2d 816, 826 (Fed. Cir. 1992). Prior to its decision in *In re Seagate Tech., L.L.C.*, 497 F.3d 1380 (Fed. Cir. 2007) (en banc), the Federal Circuit articulated nine factors to consider when evaluating the degree of the infringer's culpability and deciding whether to increase damages:

(1) whether the infringer deliberately copied the ideas or design of another;
(2) whether the infringer, when he knew of the other's patent protection investigated the scope of the patent and formed a good-faith belief that it was invalid or that it was not infringed;
(3) the infringer's behavior as a party to the litigation;
(4) the defendant's size and financial condition;
(5) the closeness of the case;
(6) the duration of defendant's misconduct;
(7) remedial action by the defendant;
(8) the defendant's motivation for harm;
(9) whether the defendant attempted to conceal its misconduct.

Read Corp., 970 F.2d at 827. The import of each particular factor to the inquiry is yet to be determined in light of *Seagate*'s elimination of an alleged infringer's affirmative duty of due care in investigating possible infringement. For example, consideration of whether the infringer investigated the scope of the patent and formed a good-faith belief that it was invalid or not infringed may carry less weight in the analysis. In determining enhanced damages, increased emphasis will likely be placed on whether the infringer copied designs and the closeness of the case, factors that relate to whether the infringer acted despite an objectively high risk of infringement.

The court may consider the size of the damages award in ruling on enhancement. *Riles v. Shell Exploration and Prod. Co.*, 298 F.3d 1302, 1314 (Fed. Cir. 2002). While the court is not required to enhance damages, it must state reasons for not doing so. *Tate Access Floors, Inc. v. Maxcess Techs., Inc.*, 222 F.3d 958, 972 (Fed. Cir. 2000); *Jurgens*, 80 F.3d at 1572.

Not only does the court have discretion in determining whether to enhance damages, it has discretion with respect to the amount of enhancement. *SRI Int'l v. Advanced Tech. Labs., Inc.*, 127 F.3d 1462, 1468-69 (Fed. Cir. 1997) (citing *National Presto Indus. Inc. v. W. Bend Co.*, 76 F.3d 1185, 1193-94 (Fed. Cir. 1996)); *Amsted Indus., Inc. v. Buckeye Steel Castings Co.*, 24 F.3d 178, 183 (Fed. Cir. 1994). While it is common to double or triple the damages amount, courts can use a wide range of multipliers in setting the amount of enhancement, including using a non-integer or percentage calculation. *Advanced Cardiovascular Sys., Inc. v.*

Medtronic, Inc., 265 F.3d 1294, 1310-11 (Fed. Cir. 2001) (affirming 30% enhancement); *Va. Panel Corp. v. MAC Panel Co.*, 133 F.3d 860, 866-67 (Fed. Cir. 1997) (affirming 10% enhancement).

9.2.3 Attorney Fees

The patent statute also authorizes the award of reasonable attorney fees in exceptional cases. 35 U.S.C. § 285. The purpose is to give the court the power to shift the burden of unnecessary and vexatious litigation on the party responsible for it. Even in exceptional cases, however, an award of attorney fees is not automatic. *National Presto Indus., Inc. v. W. Bend Co.*, 76 F.3d 1185, 1197 (Fed. Cir. 1996). Like enhanced damages, the award of attorney fees lies in the trial court's discretion. *Modine Mfg. Co. v. Allen Group, Inc.*, 917 F.2d 538, 543 (Fed. Cir. 1990).

9.2.3.1 Timing

Attorney fees motions can be brought before or after entry of judgment, but no later than fourteen days after entry of judgment. Fed. R. Civ. P. 54(d)(2)(B). Unlike enhanced damages, separate judgment does not have to be entered upon post-judgment disposition of a motion for attorney fees. Fed. R. Civ. P. 58(a)(1)(C). A motion for attorney fees, however, is usually brought together with a request for enhanced damages as the same facts usually support both motions. The court should set a briefing schedule for these motions as well as post-trial motion. Again, it is advisable where issues overlap to consider an attorney fees and enhanced damages motion at the same time as post-trial motions.

9.2.3.2 Standard

An award of attorney fees should be reserved for extraordinary cases where there is a finding of unfairness or bad faith in the conduct of the losing party, or some other equitable consideration of equal force, which makes it grossly unjust that the prevailing party be left to bear the burden of his own counsel fees. *Purer & Co. v. Aktiebolaget Addo*, 410 F.2d 871, 880 (9th Cir. 1969); *Knorr-Bremse Systeme Fuer Nutzfahrzeuge GmbH v. Dana Corp.*, 372 F. Supp. 2d 833, 848-49 (E.D. Va. 2005). The court should weigh considerations such as the closeness of the case, tactics of counsel, and the conduct of the parties. *J.P. Stevens Co. v. Lex Tex Ltd.*, 822 F.2d 1047, 1051 (Fed. Cir. 1987). In doing so, the court may reweigh evidence, so long as the court's findings do not conflict with the jury's findings. *Door-Master Corp. v. Yorktowne, Inc.*, 256 F.3d 1308, 1314 (Fed. Cir. 2001).

A party's misconduct during litigation, frivolous, vexatious, or unjustified litigation, concealment or fraud before the PTO, and willful infringement are all circumstances that support a finding that a case is exceptional. *Beckman Instruments,*

Inc. v. LKB Produkter AB, 892 F.2d 1547, 1552 (Fed. Cir. 1989). In that sense, the exceptional case standard has broader application than enhanced damages, which is restricted to cases of willfulness. *See Universal Athletic Sales Co. v. Am. Gym*, 480 F. Supp. 408, 415 (W.D. Pa. 1979) (questions involving award of counsel fees are not necessarily identical to questions involving treble damages). The standard for awarding attorney fees, however, is higher than the standard for enhanced damages. *TWM Mfg. Co. v. Dura Corp.*, 213 U.S.P.Q. 423, 428 (E.D. Mich. 1981) ("[The] standard for enhanced damages up to treble damages is not as stringent a standard as the standard which is set forth for the granting of the actual attorney fees."). A finding of willfulness, while sufficient to find a case exceptional, does not mandate such a finding. *S.C. Johnson & Sons v. Carter-Wallace, Inc.*, 781 F.2d 198, 201 (Fed. Cir. 1986); *Advanced Cardiovascular Sys., Inc. v. Medtronic, Inc.*, 2000 WL 34334583, *17 (N.D. Cal. 2000). Where there has been a finding of willfulness, however, it would be an abuse of discretion for the trial court not to discuss its reasons for declining to award attorney fees. *Modine Mfg. Co. v. Allen Group, Inc.*, 917 F.2d 538, 543 (Fed. Cir. 1990).

Furthermore, an attorney fees award under the patent statute is restricted to the patent portion of the case. *Monolith Portland Midwest Co. v. Kaiser Aluminum & Chem. Corp.*, 407 F.2d 288, 297 (9th Cir. 1969). To the extent a case involves patent and non-patent causes of action, no award of fees can be allowed for the non-patent theories. *Id.* Therefore, in considering attorney fees, the court should require the moving party to separate out fees attributable to other causes of action in the case.

9.2.4 Motion for a New Trial

Within ten days after entry of judgment in a jury or court trial, with or without a motion for judgment as a matter of law, a party can move for a new trial. Fed. R. Civ. P. 59(a). As with Rule 50(b) motions, the time limit is jurisdictional and may not be extended. *Tillman v. Association of Apartment Owners of Ewa Apartments*, 234 F.3d 1087, 1089 (9th Cir. 2000) (holding district court was without jurisdiction to consider Rule 59(a) new trial motion filed more than ten days after entry of judgment); *Carter v. United States*, 973 F.2d 1479, 1488 (9th Cir. 1992) (stating that the district court has no discretion to consider a late Rule 59(e) motion). The motion is judged under the law of the regional circuit court of appeals, and in a patent case can be based on the same grounds as any trial. *See, e.g.*, *Minton v. National Ass'n of Sec. Dealers, Inc.*, 336 F.3d 1373, 1378-79 (Fed. Cir. 2003). These include that the judgment is contrary to the weight of the evidence; misconduct by an attorney or witness that denies an opponent fair consideration; jury misconduct; erroneous rulings regarding evidence, jury instructions or trial conduct issues; excessive (with or without a remittitur) or inadequate (with or without an additur) damages; and new evidence that could not have been discov-

ered during trial. To merit granting a new trial, the subject of the motion must have caused substantial prejudice and, in virtually all cases, have been the subject of a timely objection. *See generally* 12 Moore's Federal Practice § 59.13 (3d ed. 2007).

In patent cases, a motion for new trial is often used to challenge the claim construction provided in jury instructions. Typically, the jury instruction will simply adopt the claim construction set forth in the court's *Markman* order. Although it is usually clear from the *Markman* proceeding when a party disagrees with the court's construction, a party may still need to object to the jury instruction embodying the construction, depending on the circuit in which the trial court sits. Because regional circuit law governs Fed. R. Civ. P. 51 and the propriety of jury instructions, in some circuits claim construction briefing may not satisfy a party's obligation to object. *Serio-US Indus., Inc. v. Plastic Recovery Techs. Corp.*, 459 F.3d 1311, 1317 (Fed. Cir. 2006) (holding that appellant failed to timely object to claim construction under Fourth Circuit law even though the subject had been briefed); *Ecolab, Inc. v. Paraclipse, Inc.*, 285 F.3d 1362, 1369-70 (Fed. Cir. 2002) (deciding issue on lack of error after stating it would be "uncomfortable" to conclude that the Eighth Circuit would allow a futility exception in this case).

9.3 Appeal

After resolution of post-trial motions and entry of final judgment, a party may choose to appeal the judgment. While a notice of appeal to the Federal Circuit removes a patent matter from the district court's jurisdiction, there are a few issues a court must take up in conjunction with an appeal.

9.3.1 Stay of Injunction Pending Appeal

Injunctions are an often-requested remedy in patent cases. When an injunction has been issued, and an appeal taken, the defendant will often request that the injunction be stayed pending appeal. Fed. R. Civ. P. 62(c) authorizes a district court, in its discretion, to stay an injunction when an appeal is taken. Moving for a stay of injunction in the district court pursuant to the Federal Rules is a prerequisite to requesting a stay in the Federal Circuit. Fed. R. App. P. 8.

While the literal reading of Rule 62(c) contemplates a request for a stay of injunction to be made following the filing of a notice of appeal, a court can, as a matter of judicial economy, consider a stay at the same time as the motion for permanent injunction. *See, e.g. A&L Tech. v. Resound Corp.*, No. C 93-00107 CW, 1995 U.S. Dist. LEXIS 22442, *9 (N.D. Cal. March 15, 1995), *citing Moxness Prods., Inc. v. Xomed Inc.*, 7 U.S.P.Q.2d 1877, n.1 (N.D. Fla. 1988); *Polaroid Corp. v. Eastman Kodak Co.*, 641 F. Supp. 828 (D. Mass 1985), *aff'd*, 833 F.2d 930 (Fed. Cir. 1986).

In considering whether to grant a stay, the court must apply four factors:

(1) whether the stay applicant has made a strong showing that he is likely to succeed on the merits;

(2) whether the applicant will be irreparably injured absent a stay;

(3) whether issuance of the stay will substantially injure the other parties interested in the proceeding; and

(4) where the public interest lies.

Standard Haven Prods., Inc. v. Gencor Indus., 897 F.2d 511, 512 (Fed. Cir. 1990); *E.I. DuPont deNemours & Co. v. Phillips Petroleum Co.*, 835 F.2d 277, 278 (Fed. Cir. 1987). The four factors should be weighed using a flexible balancing approach. *Standard Haven*, 897 F.2d at 512; *Arthrocare Corp. v. Smith & Nephew, Inc.*, 315 F. Supp. 2d 615, 619 (D. Del. 2004).

The requirement of irreparable injury is applied more stringently as the court has already conducted an analysis finding an injunction appropriate. *See Malarkey v. Texaco, Inc.*, 794 F. Supp. 1248, 1250 (S.D.N.Y. 1992); *Crucible, Inc. v. Stora Kopparbergs Bergslags AB,* 594 F. Supp. 1249, 1264 (W.D. Pa. 1985), *aff'd in relevant part*, 793 F.2d 1565 (Fed. Cir. 1986) ("[The] plaintiff now is entitled to its injunction and [the defendant], therefore, should not be heard to complain of that which it had every reason to anticipate would be the result if it lost its gamble."). Thus, irreparable harm for the purposes of a stay of injunction usually is not found unless the injunction will put the defendant out of business in the period pending appeal. A stay of injunction may be more appropriate if the defendant has a design-around, particularly if the patented feature is but one component in a multi-component product. Under those circumstances a court may stay the injunction and impose an ongoing royalty for the interim period to allow defendant to continue its business while transitioning to the release of its design around. The ongoing royalty amount should expressly take into account the fact that any ongoing use of the patented invention takes place following the grant of an injunction. *Amado v. Microsoft Corp.*, 517 F.3d 1353, 1362 (Fed. Cir. 2008).

9.3.2 Remands

Following review by the Federal Circuit, cases are often returned to a district court with more to be done than simply enter an affirmed or other specified judgment. Rather, explicitly or implicitly, matters often are remanded to the district court for further unspecified proceedings consistent with the appellate court's mandate and opinion.

A remand not setting forth any specified action has the effect of broadly returning jurisdiction of the case to the district court. While anything encompassed explicitly or implicitly by the Federal Circuit's mandate must be followed, any action by the district court beyond the scope of the mandate is largely unfettered. In those proceedings the district court can decide any issue not decided by the Federal

Circuit. Even as to explicit direction given by the appellate court in the mandate, compliance is subject to a general rule of flexibility under the general law of the courts of appeal. A district court's action generally will not be reversed if the result is within that contemplated by the general terms of the mandate and not contrary to its explicit terms. *See, e.g.*, *United States v. Kellington*, 217 F.3d 1084, 1095 n.12 (9th Cir. 2000).

Many remands from the Federal Circuit are essentially directions to the district court to reconsider its decision in light of the law as set out in the Federal Circuit's opinion. No outcome is implied by such a remand. It is entirely appropriate that further district court proceedings following a remand lead to an ultimate outcome other than that which would result from solely complying with the appellate mandate, or even a result reversed by an explicit mandate. For example, following reversal of a finding of patent invalidity based upon specified prior art, it is entirely proper for the district court to consider and find the patent invalid based upon other prior art, or otherwise in further proceedings to reach the result that the patent is invalid and enter judgment for the defendant. Similarly, for example, it is proper following reversal of a verdict of infringement for the district court in further proceedings to allow the addition of another patent to the suit and enter a judgment of infringement based upon it. Even as to the claims specifically considered by the Federal Circuit, further proceedings sometimes may result in entry of a judgment the same as that reversed: for example, an appellate reversal of a summary judgment does not preclude the district court's granting a second summary judgment motion based upon an altered claim construction or additional evidence; an appellate ruling that a claim or defense lacks sufficient evidence does not preclude hearing further evidence and finding the missing element is met.

In addition to the appellate mandate, an important limit on further district court proceedings following a remand is the "law of the case" rule. This rule provides that, once a case has been decided on appeal, the decision explicitly or implicitly adopted by the appellate court (excluding dicta) is to be applied, right or wrong, absent exceptional circumstances, in all subsequent proceedings of the lawsuit. *See, e.g.*, *Gindes v. United States*, 740 F.2d 947, 949 (Fed. Cir. 1984). One important example of application of this rule are claim constructions adopted by the Federal Circuit, including those of the district court affirmed by the Federal Circuit, which govern further proceedings whether within or outside the appellate court's mandate. *See, e.g.*, *Ethicon Endo-Surgery, Inc. v. U.S. Surgical Corp.,* 149 F.3d 1309, 1315 (Fed. Cir. 1998). Even here, however, while the district court may not alter the Federal Circuit's claim constructions, it properly may elaborate on the meaning intended by the Federal Circuit in further proceedings. *See, e.g.*, *E-Pass Techs., Inc. v. 3Com Corp.*, 473 F.3d 1213, 1217-20 (Fed. Cir. 2007).

The limiting law of the case rule does not apply when one of three exceptional circumstances exist: (1) the evidence in a subsequent trial is substantially different; (2) controlling authority has since made a contrary decision of the law applicable

to the issues; or (3) the earlier ruling was clearly erroneous and would work a manifest injustice. *Ormco Corp. v. Align Tech., Inc.,* 498 F.3d 1307, 1319 (Fed Cir 2007). These departures from the law of the case properly are rare. *Toro Co. v. White Consol. Indus.*, 383 F.3d 1326, 1336-37 (Fed. Cir. 2004). For new evidence to justify a departure, it must be substantial and previously unavailable, a test the Federal Circuit has equated with that required for new evidence to justify a new trial pursuant to Fed. R. Civ. P. 60(b). *See Smith Int'l v. Hughes Tool Co.*, 759 F.2d 1572, 1579 (Fed. Cir. 1985). The law of the case rule also does not apply to Federal Circuit opinions regarding preliminary injunctions; claim constructions, along with all other findings of fact and conclusions of law made or affirmed at the preliminary injunction stage, are subject to change by the district court as the case progresses. *See, e.g.*, *Guttman, Inc. v. Kopykake Enters.*, 302 F.3d 1352, 1361 (Fed. Cir. 2002).

9.3.3 Renewed Motion for Judgment as a Matter of Law

Provided that a motion for judgment as a matter of law was made at the close of all the evidence, a party may renew that motion within ten days after entry of judgment. *Jurgens v. McKasy*, 927 F.2d 1552, 1557 (Fed. Cir. 1991); *see also Wilson Sporting Goods Co. v. David Geoffrey & Assocs.*, 904 F.2d 677, 681 (Fed. Cir. 1990) (the law of the regional court of appeals determines whether the motion must be filed with the court within the ten days or only served during that period); Fed. R. Civ. P. 50(b). The rule's ten-day time limit for making the motion is jurisdictional and cannot be extended. Fed. R. Civ. P. 6(b); *see also U.S. Leather, Inc. v. H&W P'ship*, 60 F.3d 222, 224 (5th Cir. 1995). A renewed motion must be based on the same claimed failure of proof as the initial motion, and in judging it the court should apply the same standard (*see* § 8.5). *Honeywell Int'l Inc. v. Hamilton Sundstrand Corp.*, 370 F.3d 1131, 1139 (Fed. Cir. 2004) (en banc); *Duro-Last, Inc. v. Custom Seal, Inc.*, 321 F.3d 1098, 1105-09 (Fed. Cir. 2003). The motion may be, and often is, joined with a motion for a new trial. Fed. R. Civ. P. 50(b). A joint motion permits the court to grant the new trial motion as an alternative should the order granting judgment be reversed on appeal. Fed. R. Civ. P. 50(c)(1).

A renewed motion for judgment as a matter of law is the preferred mechanism by which the court can review the jury's decision on questions of law. For example, obviousness is a question of law, but is often submitted to the jury because the ultimate conclusion is based on findings of fact (the *Graham* factors). If the jury was given special interrogatories addressing each of the *Graham* factors, the court can assess the propriety of the jury's findings based on the evidence presented at trial through a renewed motion for judgment as a matter of law. *See* § 8.3.1.2.2 for discussion regarding submission of the issue of obviousness to the jury.

Chapter 10
ANDA Cases: Patent Infringement Actions Involving FDA-Approved Drugs Under the Hatch-Waxman Act

10.1 Hatch-Waxman Act Statutory Scheme
10.1.1 Abbreviated New Drug Applications (ANDA)
10.1.2 180-Day Exclusivity Period
10.2 The Hatch-Waxman Act's Impact on Patent Litigation
10.2.1 Subject-Matter Jurisdiction in ANDA Cases
10.2.1.1 Jurisdiction Over Patent Infringement Actions Pursuant to 35 U.S.C. § 271(e)(2)
10.2.1.2 Declaratory Judgment Jurisdiction
10.2.1.2.1 Declaratory Judgment Actions by First ANDA Filers
10.2.1.2.2 Declaratory Judgment Actions by Subsequent ANDA Filers
10.2.2 Case Management Scheduling and Timing of Judgment
10.2.2.1 District of New Jersey Local Patent Rules
10.2.3 Settlement of Hatch-Waxman Patent Infringement Lawsuits
10.2.3.1 Reverse Payments
10.2.3.1.1 Antitrust Issues and Reverse Payments

The interplay of FDA regulation of pharmaceutical products and the Patent Act introduces several distinctive challenges for patent case management. Prior to the passage of the Drug Price Competition and Patent Term Restoration Act of 1984 (more commonly known as the Hatch-Waxman Act), a generic drug manufacturer wishing to challenge a patent encompassing a marketed drug typically needed first to obtain marketing approval from the FDA to create the basis for federal jurisdiction to adjudicate a pharmaceutical patent's validity, enforceability, and scope. The cost of obtaining such approval as well as the uncertainty regarding a patent's validity and scope discouraged entry by generic manufacturers until after a patent expired. The FDA approval process had the effect of extending the patent's effective term. The Hatch-Waxman Act established a unified framework for addressing drug approval and resolution of patent rights relating to generic versions of patented drugs. *See* 21 U.S.C. § 355. Understanding this statutory and policy scheme and the effects it can have on the economic motivations of players in the industry can greatly assist the management of cases involving pharmaceutical patents.

10.1 Hatch-Waxman Act Statutory Scheme

Congress passed the Hatch-Waxman Act to strike "a balance between two competing policy interests: (1) inducing pioneering research and development of new drugs and (2) enabling competitors to bring low-cost, generic copies of those drugs to market." *Andrx Pharms., Inc. v. Biovail Corp.*, 276 F.3d 1368, 1371 (Fed. Cir. 2002). To harmonize these two policy interests, the basic Hatch-Waxman framework seeks to reward pioneering drug companies with publication and pro-

tection of their patent rights while encouraging generic drug companies to enter the market at the earliest possible time.

10.1.1 Abbreviated New Drug Applications (ANDA)

The Hatch-Waxman Act provides for a much-shortened and far cheaper regulatory approval process for generic versions of patented drugs. A pioneering drug company seeking FDA approval of a new drug must submit a New Drug Application (NDA) that includes extensive test data, usually from a series of clinical trials, proving the safety and efficacy of the drug. 21 U.S.C. § 355(a)-(b). Generic competitors instead are permitted to submit an Abbreviated New Drug Application (ANDA) that shortcuts this process. The ANDA is permitted to prove the safety and efficacy of the generic drug through evidence that it is the equivalent of the pioneering drug and therefore would have the same safety and efficacy, rather than through independent human trials or other test results. 21 U.S.C. § 355(j).

The ANDA, however, also must establish that the generic drug will not infringe patents governing the equivalent pioneering drug. To accomplish this, the Hatch-Waxman Act provides that a pioneering drug company's NDA must disclose all patents that cover the drug. 21 U.S.C. § 355(b)(1), (c)(2). The statute provides a mechanism for extending the term of the relevant patents for the period of FDA approval of the drug. Additionally, the FDA lists all such patents in a publication commonly referred to as the "Orange Book," providing notice of the pioneering drug company's patents to the public. The pioneering drugs approved by the FDA are known as "listed drugs." 21 U.S.C. § 355(j)(2)(A)(i). As part of an ANDA filing, a generic drug manufacturer must submit one of four certifications addressing each of the patents listed in the Orange Book that cover the relevant listed drug. 21 U.S.C. § 355(j)(2)(A)(vii); *see Eli Lilly & Co. v. Medtronic, Inc.*, 496 U.S. 661, 677 (1990). Specifically, the ANDA filer must certify:

> (I) that the [NDA-required] patent information has not been filed;
> (II) that such patent has expired;
> (III) the date on which such patent will expire; or
> (IV) that such patent is invalid or will not be infringed by the manufacture, use, or sale of the new drug for which the ANDA application is submitted.

21 U.S.C. § 355(j)(2)(A)(vii).

A certification that an Orange-Book-listed patent is invalid or not infringed is commonly known as a Paragraph IV certification. An ANDA filer that makes a Paragraph IV certification must provide "a detailed statement of the factual and legal basis for the opinion of the applicant that the patent is invalid or will not be infringed" to both the patent owner and the NDA holder. 21 U.S.C. § 355(j)(2)(B)(iv)(II). It is only by filing such a Paragraph IV certification that an

ANDA filer can obtain FDA approval to market a generic version of a listed drug before the expiration of an Orange-Book-listed patent. *Eli Lilly*, 496 U.S. at 677.

The Patent Act recognizes that the mere filing of a Paragraph IV certification constitutes an act of patent infringement entitling the Orange-Book-listed patent holder to initiate an infringement suit. 35 U.S.C. § 271(e)(2). If the Orange-Book-listed patent holder files an infringement action within 45 days after receiving notice of the Paragraph IV certification, then the ANDA application is automatically stayed for up to 30 months. The FDA cannot approve the ANDA during this 30 month period unless prior to that time the suit is resolved or the patent expires. 21 U.S.C. § 355(j)(5)(B)(iii). A district court has discretion to shorten or extend the 30-month stay if "either party to the action failed to reasonably cooperate in expediting the action." *Id.* If no infringement action is filed during this 45-day period, the FDA may approve the ANDA. *Id.*

10.1.2 180-Day Exclusivity Period

To encourage a generic drug company to take on the potential burden and expense of challenging an Orange-Book-listed patent—helping to open the door for other generic drug companies to enter the market—the Hatch-Waxman Act grants the first ANDA applicant that files a Paragraph IV certification a 180-day period of market exclusivity. 21 U.S.C. § 355(j)(5)(B)(iv). The period of exclusivity is effected by prohibiting the FDA from approving any other generic drug based on the same NDA until the expiration of the first ANDA filer's period of exclusivity. *Id.* § 355(j)(5)(B)(iv)(II)(bb).

For ANDA applications filed before December 8, 2003, the period of exclusivity begins either on the date the first Paragraph IV ANDA filer begins marketing its generic or on the date of a final court decision finding the relevant Orange Book-listed patents invalid or not infringed, whichever is first. 21 U.S.C. § 355(j)(5)(B)(iv) (2000). This exclusivity period applies regardless of whether the first ANDA filer is successful in establishing the Orange Book-listed patents as invalid or not infringed.

For ANDA applications filed after December 8, 2003, the first Paragraph IV ANDA filer's marketing of the generic is now the only trigger for the exclusivity period. 21 U.S.C. § 355(j)(5)(B)(iv) (2003). The exclusivity can, however, be forfeited under certain circumstances, including the first ANDA filer's failure to market within a certain time period, withdrawal of the ANDA application, or expiration of all relevant-Orange Book-listed patents. *See* 21 U.S.C. § 355(j)(5)(D).

10.2 The Hatch-Waxman Act's Impact on Patent Litigation

The substantive rights granted under the Hatch-Waxman Act greatly influence the litigation and marketing strategies of the players in the pharmaceutical

market. The statutory provisions have significant impact not only on the litigation and market relationship between the pioneering drug NDA filer and the first generic drug ANDA filer, but also on subsequent ANDA filers (i.e., later generic drug companies seeking entry into the market after the 180-day period of exclusivity). Drug companies have developed litigation strategies, discussed below, that attempt to take advantage of the benefits granted by the Hatch-Waxman Act while circumventing the countervailing interests of the statute. Management of ANDA cases should take these issues into consideration.

10.2.1 Subject-Matter Jurisdiction in ANDA Cases

10.2.1.1 Jurisdiction Over Patent Infringement Actions Pursuant to 35 U.S.C. § 271(e)(2)

The Hatch-Waxman Act, in conjunction with the Patent Act, grants federal courts jurisdiction over a patent infringement action once a Paragraph IV ANDA filer provides notice to a patent holder that the ANDA applicant believes the relevant Orange-Book-listed patents are invalid or not infringed. 35 U.S.C. § 271(e)(2). If the patent holder files an infringement suit within 45 days of the ANDA filing, the Hatch-Waxman Act imposes an automatic stay of 30 months or until the end of the litigation that delays FDA approval of the ANDA application. Not surprisingly, holders of Orange-Book-listed patents often initiate patent infringement suits upon the filing of ANDA applications and they have strong incentives to delay the resolution of such litigation to prolong the stay of FDA approval for generic versions of patented drugs. *See* Federal Trade Commission, Generic Drug Entry Prior to Patent Expiration: An FTC Study 49 (July 2002).

10.2.1.2 Declaratory Judgment Jurisdiction

While it is clear that suit can be filed as to patents listed in a Paragraph IV certification, disputes over jurisdiction have arisen when the Paragraph IV certification implicates more than one Orange-Book-listed patent and the NDA patent holder brings suit on fewer than all of them. While NDA patent holders have a strong incentive to file suit to trigger the 30-month stay, they also have a strong incentive to avoid a litigation result that may allow the first ANDA filer to enter the market and start the 180-day period for subsequent ANDA filers to flood the market with generics.

Consequently, in cases where multiple Orange-Book-listed patents are implicated, NDA patent holders sometimes initiate suit on only one of the patents, typically the patent with the earliest expiration date. By initiating suit, the NDA holder is automatically entitled to a 30-month stay before FDA approval of the

generic. And even if the one patent is found invalid or not infringed in litigation, the first ANDA filer still runs the risk of infringing the other patents if it goes to market. This may discourage the first ANDA filer from beginning to market, and the 180-day period before other subsequent ANDA filers can enter the market will not be triggered by market entry. Nor is a finding of invalidity or non-infringement as to one of several Orange Book patents enough to trigger the start of the 180-day exclusivity period; all the relevant Orange-Book-listed patents must be found invalid or not infringed. *Caraco Pharm. Labs., Ltd. v. Forest Labs. Inc.*, 527 F.3d 1278, 1287 (Fed. Cir. 2008). As a result, this strategy enables NDA holders to take advantage of the provisions for a 30-month stay of FDA approval of generics without the corresponding risk of losing their market position.

To prevent this strategy, Congress amended the Hatch-Waxman Act in 2003 to include a "civil action to obtain patent certainty" provision (CAPC) that allows an ANDA filer to file a declaratory judgment claim regarding all relevant Orange-Book-listed patents if the NDA holder fails to sue upon all of them within the 45-day period. ANDA filers can use the CAPC provision to initiate declaratory judgment actions with respect to any relevant unasserted Orange Book patent.

10.2.1.2.1 Declaratory Judgment Actions by First ANDA Filers

First ANDA filers desiring to take their generic drugs to market without the risk of infringement may use the CAPC provision to counterclaim or initiate actions for declaratory judgment of invalidity or non-infringement with respect to the relevant Orange Book patents not asserted by the NDA holders. *See Teva Pharms. USA, Inc. v. Novartis Pharms. Corp.*, 482 F.3d 1330, 1346 (Fed. Cir. 2007) (approving such suits). Among the reasons for the Federal Circuit's decision was that the NDA holder's suit on less than all the relevant patents was contrary to the intent of the provisions of the Hatch-Waxman Act. *Id.* at 1342-43. Specifically, the Federal Circuit found that the NDA holder was trying to "simultaneously leverage the benefits provided to a patentee under the Hatch-Waxman Act and avoid the patentee's accompanying responsibilities." *Id.* at 1343.

10.2.1.2.2 Declaratory Judgment Actions by Subsequent ANDA Filers

Subsequent ANDA filers also have an interest in early resolution of patent rights due to the 180-day exclusivity period afforded to a successful first ANDA filer. Indeed, when first ANDA filers are unable or unwilling to bring their generics to market or obtain a court judgment of invalidity or non-infringement with respect to all relevant Orange Book patents, the only way a subsequent ANDA

filer can start the 180-day exclusivity period is by obtaining its own court judgment of invalidity or non-infringement through a declaratory judgment action.

The Federal Circuit addressed the issue of a subsequent ANDA filer's standing to bring declaratory judgment actions in *Caraco Pharm. Labs., Ltd. v. Forest Labs., Inc.*, 527 F.3d 1278 (Fed. Cir. 2008). Forest (the NDA holder) sued on one of its Orange Book patents, but not the other. When the first ANDA filer failed to bring a declaratory judgment action regarding the other patent, Caraco, a subsequent ANDA filer, brought one. In an attempt to remove any case or controversy, Forest unilaterally granted Caraco a covenant not to sue. The Federal Circuit nevertheless found that even with Forest's covenant not to sue, Caraco had standing to bring the action. *Id.* at 1291-92. Specifically, by preventing the FDA from approving ANDAs of generic drug manufacturers, Forest was effectively excluding Caraco from offering what it claimed to be a non-infringing generic drug. *Id.* at 1292. The Federal Circuit found this to be a restraint from the free exploitation of non-infringing goods, which has been recognized as a cognizable injury. *Id.* (*citing Red Wing Shoe Co. v. Hockerson-Halberstadt, Inc.*, 148 F.3d 1355, 1360 (Fed. Cir. 1998)).

Thus, in the context of ANDAs filed before December 8, 2003, declaratory judgment actions are used as vehicles by which generic drug companies can bring their products to market sooner. For ANDAs filed after December 8, 2003, there is less incentive for subsequent ANDA filers to seek declaratory relief, as there is no longer a court-judgment trigger for the 180-day exclusivity period. Instead, subsequent ANDA filers are protected by provisions which forfeit a first ANDA filer's right to exclusivity if it fails to market its generic within certain time periods.

10.2.2 Case Management Scheduling and Timing of Judgment

The Hatch-Waxman statutory framework affects not only the incentives for bringing suit but also the conduct of the parties during the litigation.

A Paragraph IV certification requires an ANDA filer to provide the NDA holder with a detailed statement of the factual and legal basis for its invalidity or non-infringement opinions. The parties to a patent lawsuit brought under the Hatch-Waxman Act therefore usually have more information at the start of the litigation than what is available at the start of a typical patent suit. For this reason, courts should be able to push for quicker resolution of issues than in a typical patent case.

An approach to case management that recognizes and utilizes the early availability of information is particularly important because NDA holders have strong motivation to delay resolution of the litigation for 30 months. Until there is a final court judgment that the relevant Orange-Book-listed patents are invalid or not infringed, the first ANDA filer cannot obtain FDA approval and take its generic to market. Therefore, by delaying resolution of the litigation, the NDA holder can

delay market entry by the first ANDA filer and delay the start of the 180-day period before any subsequent ANDA filers can bring their generics to market, thereby extending its market exclusivity period.

First ANDA filers may not necessarily oppose this delay. A court judgment of invalidity or non-infringement will start the clock on a first ANDA filer's 180-day exclusivity period. The first ANDA filer will want to delay that start until it is ready to market its drug in order to maximize its time as the sole generic provider. Subsequent ANDA filers, in contrast, are almost always interested in a speedy resolution to ensure an early trigger of the 180-day exclusivity period. Thus, in cases between an NDA holder and the first ANDA filer, a court may be required to manage a lawsuit in which neither party is interested in resolution but are using the litigation to advance other objectives.

Courts can combat the strong incentive to delay by adopting expedited case schedules that take advantage of the invalidity and non-infringement information already available to the parties in the Paragraph IV certification. Unlike many patent defendants, ANDA filers should be able to exchange their invalidity and non-infringement positions almost immediately upon commencement of the lawsuit, having prepared their required notice to the NDA holders. NDA holders similarly should be able to exchange their infringement and validity contentions at the commencement of litigation having had notice usually for 45 days before the suit is filed.

Courts can also directly combat attempts by the parties to delay litigation. The Hatch-Waxman Act explicitly grants courts the discretion to adjust the 30-month stay period based on the parties' conduct during litigation. 21 U.S.C. § 355(j)(5)(B)(iii). Where a patent holder attempts to extend its patent exclusion through extensive litigation, a court may shorten the 30-month period. *See Allergan, Inc. v. Alcon Labs, Inc.,* 324 F.3d 1322, 1337 n.5 (Fed. Cir. 2003) (Schall, J., concurring). Similarly, where an ANDA filer delays and fails to cooperate in discovery for example, the court may extend the period before the FDA may approve the ANDA. *See Eli Lilly & Co. v. Teva Pharms. USA, Inc.,* Case No. 2009-1071, slip op. at 9 (Fed. Cir. Feb. 24, 2009). In exercising this discretion, courts should limit its considerations to the conduct of the parties in the litigation, and not on positions taken before the FDA. *See Andrx Pharms., Inc. v. Biovail Corp.,* 276 F.3d 1368, 1376 (Fed. Cir. 2002). With this in mind, courts can establish disclosure and discovery deadlines that promote early resolution of ANDA cases.

10.2.2.1 District of New Jersey Local Patent Rules

As discussed previously in Chapter 2, one way to facilitate the early resolution—or at least efficient resolution—of patent cases is the adoption or use of specialized local rules, which have proven to be a powerful case management tool. The District of New Jersey is the first jurisdiction to adopt local patent rules that in-

clude provisions specific to patent cases brought under the Hatch-Waxman Act. These provisions recognize and take advantage of the early availability of information in ANDA cases, reversing the typical order and timing for disclosure of infringement and invalidity contentions.

Ordinarily, plaintiff-patent holders have the initial advantage in patent litigation, controlling the timing of the litigation and having the opportunity to prepare and plan the infringement case well in advance of filing suit. Defendants, on the other hand, must investigate and develop non-infringement and invalidity positions while already in the throes of litigation. Consequently, typical local patent rules (including the District of New Jersey's rules governing non-ANDA patent cases) require the plaintiff early in the litigation to provide detailed infringement contentions first, allowing the defendant some reasonable time thereafter to prepare and serve invalidity contentions.

The situation is somewhat reversed in Hatch-Waxman cases, however. It is the defendant in Hatch-Waxman cases that dictates the timing and scope of litigation through its ANDA filing. In addition, unlike a typical defendant, a defendant in a patent case brought under the Hatch-Waxman Act already has a "detailed statement of the factual and legal basis for the opinion of the applicant that the patent is invalid or will not be infringed" prepared as part of its Paragraph IV certification. *See* 21 U.S.C. § 355(j)(2)(B)(iv)(II). Because a defendant in an ANDA case already has detailed invalidity and non-infringement contentions by the time suit is filed, the local patent rules of the District of New Jersey require the defendant to provide its invalidity contentions first. *See* Local Patent Rule 3.6 for the District of New Jersey (the district's local rules became effective January 1, 2009; they are contained as an appendix to this volume and are also available on the court's website at http://www.njd.uscourts.gov/). In addition, they impose a new obligation on an ANDA defendant to also provide its non-infringement contentions. Specifically, District of New Jersey Local Patent Rule 3.6 requires ANDA defendants to:

(1) produce the entire ANDA that is the basis of the case by the initial scheduling conference;
(2) provide the written basis for their "Invalidity Contentions" within 14 days after the initial scheduling conference; and
(3) provide the written basis (including claim charts) for their "Non-Infringement Contentions" within 14 days after the initial scheduling conference.

Id. Forty-five days thereafter, the plaintiff is required to provide its infringement contentions. *Id.*

This reversal of disclosure obligations and the additional requirement to provide non-infringement contentions was the subject of much discussion during the comment period for the District of New Jersey's local patent rules. Critics questioned the practice of requiring ANDA defendants to provide non-infringement

contentions before knowing a plaintiff's theory of infringement, particularly when plaintiffs bear the burden of proving infringement. The requirement imposes an obligation on ANDA defendants to address patent claims that ultimately may not even be asserted by the plaintiff. Proponents argued the rules appropriately accounted for the special nature and availability of information in Hatch-Waxman cases. Because generics are not available on the market for a patent holder to conduct a thorough infringement analysis, plaintiffs should not be required to provide infringement contentions without full-disclosure of the ANDA filing and non-infringement arguments required by the local rules.

The District of New Jersey local patent rules were adopted after consideration of these concerns, and serve as a helpful guideline for management of Hatch-Waxman patent cases. Whether or not a disclosure schedule similar to the one proposed by the District of New Jersey is adopted, an understanding of the mechanics of the Hatch-Waxman Act can help courts fashion case-management techniques to take advantage of and address the particular incentives and interests of the parties, and assist in the early resolution of ANDA cases.

10.2.3 Settlement of Hatch-Waxman Patent Infringement Lawsuits

10.2.3.1 Reverse Payments

Other than the automatic 30-month stay on FDA approval of the ANDA, an NDA holder has little incentive to engage in litigation. Because the generic drug company is not yet selling a competing drug, an NDA holder cannot receive any damages, yet it still runs the risk of having its patents invalidated. In the best case scenario, the NDA holder is in the same position it would be in without a lawsuit. And in the worst case, it loses its patent rights. For a generic, however, litigation is a low-risk proposition. In the worst case scenario, apart from litigation expenses the generic is in the same position it was without litigation. In the best case scenario, it can enter the market before expiration of the Orange-Book-listed patents with a period of market exclusivity. Thus, in Hatch-Waxman patent lawsuits, the NDA holder bears the majority of the risk, creating risk-assessment that differs greatly from other patent cases.

In particular, NDA filers are highly motivated to settle in a manner that avoids the first ANDA filer's early market entry, not only to avoid the risk of having its patents found invalid or not infringed, but also because it has the incentive to delay market entry by all other generics. Because of the 180-day exclusivity period granted to first ANDA filers, by delaying a first ANDA filer's generic entry, the NDA holder can delay entry by all generics. As a result of this dynamic, NDA holders and first ANDA filers have economic incentives to reach settlement agreements that run counter to the goals of the Hatch-Waxman Act.

In the 1990s, NDA holders started entering into settlement agreements with first ANDA filers known as reverse-payment settlements. In contrast to typical patent case settlements in which payments flow from the alleged infringer to the patent holder, a reverse-payment settlement involves the patent owner (NDA holder) making cash payments to the alleged infringer (the first ANDA filer) to settle the patent infringement. The reverse payment would be made in exchange for the first ANDA filer's promise not to enter the market for a time period negotiated by the parties. Because of the exclusivity provisions of the Hatch-Waxman Act, such settlements allow NDA holders to pay one ANDA filer to delay entry by all other ANDA filers, effectively extending the term of protection for the NDA holder.

This scheme allows the NDA holder to avoid litigation risk and to guarantee market exclusivity for a period of time regardless of the merits of its patents. At the same time, the first ANDA filer is compensated for its delayed market entry and still enjoys a 180-day period of generic exclusivity once it did enter the market.

10.2.3.1.1 Antitrust Issues and Reverse Payments

The Federal Trade Commission, among others, has challenged reverse-payment settlements of Hatch-Waxman lawsuits as illegal under the antitrust laws. To date, however, courts have rejected those challenges.

In *In re Schering-Plough Corp.*, 136 F.T.C. 956 (2003), the FTC challenged a settlement whereby the NDA holder agreed to pay $60 million in return for the generic's agreement not to enter the market for four years even though the 30-month stay before the FDA could approve the generic would expire in only one year. The Commission found that absent the payments, the parties would have negotiated different market entry dates. Consequently, the Commission held the settlement to be an agreement to delay entry dates and that such delay injures competition and consumers, amounting to an unlawful restraint on trade. *Id.* at 1061. The Eleventh Circuit, however, reversed that decision in *Schering-Plough Corp. v. FTC*, 402 F.3d 1056 (11th Cir. 2005). The Eleventh Circuit found that the FTC failed to consider the exclusionary power of the patent and the relative risk assessments created by the Hatch-Waxman Act in assessing whether the settlement violated antitrust laws. What must be considered is "the extent to which the exclusionary effects of the agreement fall within the scope of the patent's protection." *Id.* at 1076. Because the Eleventh Circuit found that the effects of the agreement fell within the protections of the relevant patent, the settlement was not illegal.

The Second Circuit in *In re Tamoxifen Citrate Antitrust Litig.*, 429 F.3d 370 (2d Cir. 2005), similarly found that reverse-payment settlements are not necessarily unlawful restraints on commerce and do not represent anticompetitive agree-

ments, particularly when the scope of the agreement falls within the coverage of the relevant patents. The Supreme Court denied certiorari in both the *Schering-Plough* and *Tamoxifen* cases. In addition, a Senate bill that would have banned reverse-payment settlements stalled in 2007. It was re-introduced in February 2009.

More recently, the Federal Circuit upheld a district court's dismissal of antitrust claims asserted against a reverse-payment settlement agreement in *In re Ciprofloxacin Hydrochloride Antitrust Litigation*, 2008 U.S. App. LEXIS 12504 (Fed. Cir. Oct. 15, 2008). Under the terms of the settlement, the NDA holder agreed to pay $49.1 million in return for the ANDA filer's agreement not to challenge the validity or enforceability of the patent and certification that it would not market its generic until expiration of the patent. The Federal Circuit concluded that the district court properly found that any anticompetitive effects of the settlement agreement were within the exclusionary power of the patents, and the mere fact that the agreement insulated the NDA holder from validity challenges by the ANDA defendants was not an antitrust violation.

The FTC continues to challenge such settlements. Moreover, the 2003 amendments to the Hatch-Waxman Act alter the incentives for first ANDA filers to enter into such agreements. For ANDAs filed after December 8, 2003, the first ANDA filer forfeits its 180-day exclusivity period if it fails to market its generic. 21 U.S.C. § 355(j)(5)(D). Should an NDA holder and first ANDA filer agree to delay market entry of the generic beyond expiration of the 30-month stay, the first ANDA filer sacrifices its market exclusivity. Forfeiture adversely affects not only the first ANDA filer but also the NDA holder as it will have to compete with many other generics, removing the incentive for NDA holders to offer reverse payments in the first place. Thus, the forfeiture provision discourages parties from entering into reverse-payment settlements as the payments may not guarantee the market exclusivity for which the NDA holders bargain.

Chapter 11
Patent Law Primer

11.1 The Patent
11.1.1 The Patent Document
11.1.1.1 The First Page—Administrative Details
11.1.1.2 Drawings
11.1.1.3 The Specification
11.1.1.3.1 Claims
11.2 Patent Prosecution and the Patent Lifecycle
11.2.1 Institutional Aspects
11.2.1.1 The Patent Office
11.2.1.2 The Patent Bar
11.2.1.3 The Board of Patent Appeals and Interferences
11.2.1.4 Laws Governing the PTO and the MPEP
11.2.2 Filing a Patent Application
11.2.2.1 Overview of Patent Examination
11.2.2.2 The Application
11.2.2.2.1 Elements of a Non-provisional Patent Application
11.2.2.2.2 Prior Art Disclosure—Information Disclosure Statement
11.2.2.2.3 Priority Date
11.2.2.2.4 Non-Standard Applications
11.2.2.3 Restriction Requirements and Divisional Applications
11.2.2.4 Publication
11.2.3 The Prosecution History or "File Wrapper"
11.2.3.1 Office Actions
11.2.3.1.1 Affidavits
11.2.3.1.2 Interview Report
11.2.3.2 Continuation Applications
11.2.3.3 Continuation-in-Part Applications
11.2.3.4 PTO Petition and Appeals
11.2.4 Patent Duration
11.2.4.1 Patent Term Adjustments
11.2.4.2 Patent Term Restoration
11.2.5 Post-Issuance Corrections
11.2.5.1 Disclaimers
11.2.5.2 Correction
11.2.5.3 Reissue
11.2.5.3.1 Narrowing Reissues
11.2.5.3.2 Broadening Reissues
11.2.5.3.2.1 The Recapture Rule
11.2.5.3.2.2 Intervening Rights
11.2.5.4 Reexamination
11.2.5.4.1 Ex Parte Reexamination
11.2.5.4.2 Inter Partes Reexamination
11.2.5.5 Reissue Versus Reexamination
11.2.6 The Presumption of Validity
11.3 Validity
11.3.1 Patentable Subject Matter (§ 101)
11.3.1.1 Isolated and Purified Natural Substances (Including DNA Sequences)
11.3.1.2 Computer Software
11.3.1.3 Business Methods
11.3.2 Utility (§ 101)
11.3.3 Disclosure (§ 112)

11.3.3.1 Written Description
11.3.3.1.1 Policing Continuation Practice
11.3.3.1.2 Biotechnology Patents
11.3.3.2 Enablement
11.3.3.3 Best Mode
11.3.3.4 Claim Definiteness
11.3.4 Novelty and Statutory Bars (§ 102)
11.3.4.1 First to Invent—§ 102(a)
11.3.4.1.1 "Known or Used"
11.3.4.1.2 Printed Publication
11.3.4.2 Novelty—First to Invent—§ 102(g)
11.3.4.2.1 Conception
11.3.4.2.2 Reduction to Practice
11.3.4.2.3 Reasonable Diligence
11.3.4.2.4 Abandoned, Suppressed, or Concealed
11.3.4.2.5 Section 102(g)—Summary
11.3.4.3 Novelty—"Secret Prior Art"—§ 102(e)
11.3.4.4 Novelty—Derivation—§ 102(f)
11.3.4.5 Statutory Bars—Timely Filing—§ 102(b)
11.3.4.5.1 Experimental Use
11.3.4.5.2 On Sale Bar
11.3.4.6 Statutory Bars—Abandonment—§ 102(c)
11.3.4.7 Statutory Bars—International Filing—§ 102(d)
11.3.5 Nonobviousness—§ 103
11.3.5.1 Historical Development
11.3.5.2 Nonobviousness Standard
11.3.5.3 Applying § 103
11.3.5.3.1 Determining the Level of Ordinary Skill in the Art
11.3.5.3.2 Scope and Content of the Prior Art
11.3.5.3.3 Differences Between Invention and Prior Art
11.3.5.3.4 Secondary Considerations
11.3.5.3.4.1 Long-Felt Need and Failure by Others
11.3.5.3.4.2 Awards and Praise
11.3.5.3.4.3 Skepticism, "Teaching Away," and Unexpected Results
11.3.5.3.4.4 Licensing Activity
11.3.5.3.4.5 Copying
11.3.5.3.4.6 Commercial Success
11.3.5.3.5 The Ultimate Conclusion and Combining References
11.3.6 Inventorship
11.3.6.1 Inventive Entities
11.3.6.2 Default Rights of Owners
11.3.6.3 Correction of Inventorship
11.4 Enforcement: Infringement, Defenses, and Remedies
11.4.1 Infringement
11.4.1.1 Section 271
11.4.1.2 Direct Infringement
11.4.1.3 Indirect Infringement
11.4.1.3.1 Inducement
11.4.1.3.2 Contributory Infringement
11.4.1.3.3 Joint Infringement
11.4.1.4 Infringement Analysis
11.4.1.4.1 Literal Infringement
11.4.1.4.1.1 Interpreting the Literal Scope of Means-Plus-Function Claims (§ 112, ¶ 6)
11.4.1.4.1.1.1 Determining Whether a Claim Limitation Is Governed by § 112, ¶ 6

11.4.1.4.2 Non-Literal Infringement—The Doctrine of Equivalents
11.4.1.4.2.1 Limiting Principles
11.4.1.4.2.1.1 The All-Elements (All-Limitations) Rule
11.4.1.4.2.1.2 Prosecution History Estoppel
11.4.1.4.2.1.3 Prior Art Rule
11.4.1.4.2.1.4 The Public Dedication Rule
11.4.1.4.2.2 Interpreting the Non-Literal Scope of Means Plus Function Claims
11.4.1.4.3 The Reverse Doctrine of Equivalents
11.4.1.5 Extraterritorial Infringement
11.4.1.5.1 Manufacturing Components Within the United States for Assembly Abroad—§ 271(f)
11.4.1.5.2 Importing Products Made Using Patented Processes—§ 271(g)
11.4.2 Defenses
11.4.2.1 Non-infringement
11.4.2.2 Absence of Liability
11.4.2.2.1 Consent or License
11.4.2.2.1.1 First Sale Doctrine/Exhaustion Principle
11.4.2.2.1.2 Shop Right
11.4.2.2.2 Experimental Use Defense
11.4.2.2.3 Prior Use Right
11.4.2.2.4 Bar Against Remedies for Infringement of Medical Procedure Patents by Doctors and Hospitals
11.4.2.2.5 Sovereign Immunity
11.4.2.3 Unenforceability
11.4.2.3.1 Inequitable Conduct
11.4.2.3.2 Patent Misuse
11.4.2.3.3 Equitable Estoppel
11.4.2.3.4 Laches
11.4.2.3.4.1 Prosecution Laches
11.4.2.4 Invalidity
11.4.2.4.1 Double Patenting
11.4.2.4.1.1 Statutory or Same Invention
11.4.2.4.1.2 Non-Statutory or Obvious-Type
11.4.2.5 Antitrust Counterclaims
11.4.3 Remedies
11.4.3.1 Injunctive Relief
11.4.3.1.1 Preliminary Injunction
11.4.3.1.2 Permanent Injunction
11.4.3.2 Monetary Damages
11.4.3.2.1 Compensatory Damages
11.4.3.2.1.1 Lost Profits
11.4.3.2.1.2 Convoyed Sales
11.4.3.2.1.3 Price Erosion
11.4.3.2.1.4 Reasonable Royalty
11.4.3.2.1.5 Marking Requirements
11.4.3.2.2 Enhanced Damages
11.4.3.2.3 Prejudgment Interest
11.4.3.3 Costs
11.4.3.4 Attorney Fees
11.5 Appeals and Parallel Litigation
11.5.1 Appeals to the Federal Circuit
11.5.1.1 Appellate Jurisdiction
11.5.1.2 Choice of Law
11.5.1.3 Interlocutory Appeals

11.5.2 Parallel Litigation Forums
11.5.2.1 International Trade Commission
11.5.2.2 Patent Office Reexamination
11.5.2.3 Other District Courts and MDL Proceedings
11.5.2.4 Foreign Courts

This chapter surveys the procedures for obtaining patents and the substantive law governing patent litigation. It also provides an overview of the patent system and a starting point for researching patent law. After reviewing an actual patent document, the chapter summarizes *prosecution*, the process through which the U.S. Patent and Trademark Office (PTO) grants patents to inventors. Patent cases often require courts to examine the prosecution history that led to the issuance of a patent. The prosecution section provides a window into the PTO to provide an appreciation of how patents are examined. The chapter then reviews the law regarding patent *validity*. The right to exclude others from practicing an invention is only available if several requirements are met. The chapter then discusses patent *enforcement*: infringement of a patent claim, defenses to a charge of infringement, and remedies. The chapter concludes by examining the wider battlefield for patent litigation existing outside of the district court—the appellate process and proceedings before the International Trade Commission, the U.S. Patent and Trademark Office, other U.S. courts, and foreign courts.

11.1 The Patent

A patent grants its owner the right to exclude others from making, using, selling, offering to sell, importing, or offering to import the claimed invention. *See* § 271 (unless otherwise indicated, all section references are to the Patent Act (35 U.S.C.)). Because a patent provides only a right to exclude, a patentee does not have an affirmative right to practice the invention. Inventors sometimes cannot make their patented inventions without infringing other patents on underlying technology. Such *blocking patents* in turn spur substantial licensing activity. As befits a right to exclude, a patent "ha[s] the attributes of personal property." § 261.

Unlike copyrights or trade secrets, a patent must issue from the United States Patent and Trademark Office after a proper application has been made by the inventor. The requirements of patentability are set forth in Title 35 of the U.S. Code, reflecting the omnibus codification of patent law completed in 1952 as well as numerous subsequent amendments.

11.1.1 The Patent Document

Patents issued by the PTO follow a common format dictated by the World Intellectual Property Organization.

Figure 11.1
Page One of Standard Patent Application

US005205473A

United States Patent [19]
Coffin, Sr.

[11] **Patent Number: 5,205,473**
[45] **Date of Patent: Apr. 27, 1993**

[54] **RECYCLABLE CORRUGATED BEVERAGE CONTAINER AND HOLDER**

[75] Inventor: **David W. Coffin, Sr.**, Fayetteville, N.Y.

[73] Assignee: **Design By Us Company**, Philadelphia, Pa.

[21] Appl. No.: **854,425**

[22] Filed: **Mar. 19, 1992**

[51] **Int. Cl.**[5] **B65D 3/28**
[52] **U.S. Cl.** ..... **229/1.5 B**; 206/813; 220/441; 220/DIG. 30; 229/1.5 H; 229/DIG. 2; 493/296; 493/907
[58] **Field of Search** ..... 229/1.5 B, 1.5 H, 4.5, 229/DIG. 2; 220/441, 671, 737–739, DIG. 30; 493/287, 296, 907, 908; 209/8, 47, 215; 206/813

[56] **References Cited**

U.S. PATENT DOCUMENTS

1,732,322	10/1929	Wilson et al.	220/DIG. 30
1,771,765	7/1930	Benson	229/4.5
2,266,828	12/1941	Sykes	229/1.5 B
2,300,473	11/1942	Winkle	229/4.5
2,501,815	3/1950	Hamm .	
2,617,549	11/1952	Egger .	
2,641,402	6/1953	Bruun	229/4.5
2,661,889	12/1953	Phinney	229/4.5
2,969,901	1/1961	Behrens	229/1.5 B
3,237,834	3/1966	Davis et al.	229/1.5 B
3,779,157	12/1973	Ross, Jr. et al.	53/527
3,785,254	1/1974	Mann .	
3,890,762	6/1975	Ernst et al. .	
3,908,523	9/1975	Shikaya	229/1.5 B
4,080,880	3/1978	Shikay	493/296
4,146,660	3/1979	Hall et al. .	
4,176,054	11/1979	Kelley	209/8
5,009,326	4/1991	Reaves et al. .	
5,092,485	3/1992	Lee	229/1.5 B

OTHER PUBLICATIONS

"The Wiley Encyclopedia of Packaging Technology", John Wiley & Sons, pp. 66–69, 1986.

Primary Examiner—Gary E. Elkins
Attorney, Agent, or Firm—Synnestvedt & Lechner

[57] **ABSTRACT**

Corrugated beverage containers and holders are which employ recyclable materials, but provide fluting structures for containing insulating air. These products are easy to hold and have a lesser impact on the environment than polystyrene containers.

18 Claims, 8 Drawing Sheets

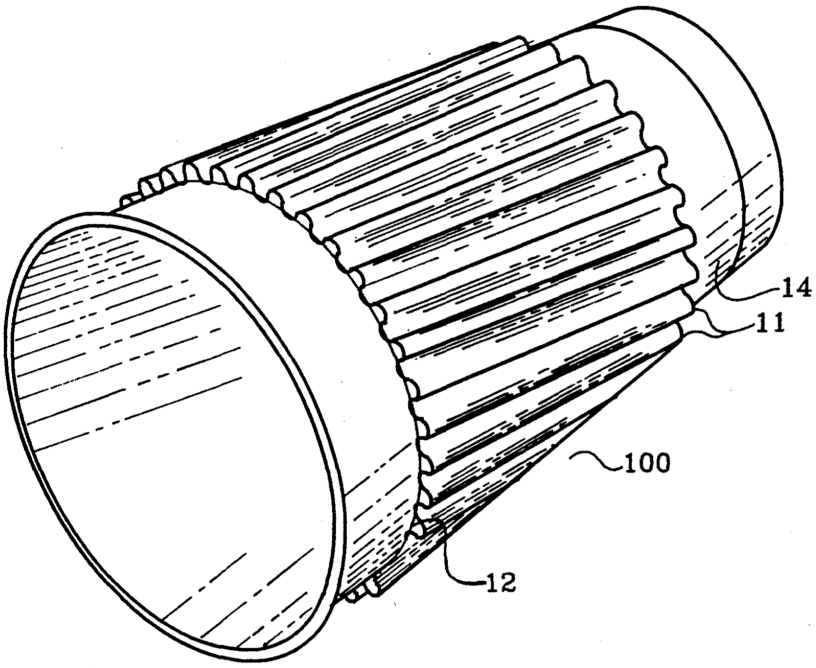

11.1.1.1 The First Page—Administrative Details

As reflected in Figure 11.1, the first page of a U.S. patent contains a header, an abstract, and a representative drawing. The header contains bibliographic information categorized using the INID (Internationally agreed Numbers for the Identification of bibliographic Data) classification system. Field 19 (labeled [19]) indicates the office or organization publishing the document, here the U.S. Patent Office. Field 11 shows the patent number. Every patent has a unique number assigned by the Patent Office in the order they issue. Parties often abbreviate patents to their last three numbers for convenience. Thus, Patent No. 5,205,473 becomes "the '473 patent." Field 45 contains the date the patent issued.

Fields 50-58 provide technical information, such as the domestic classification ([52]), title ([54]), a list of prior art documents cited by the examiner ([56]), the abstract ([57]) and the technical field of search ([58]). The header also contains information showing the history and ownership of the patent. Fields 60-68 provide references to other legally or procedurally related domestic patent documents. (The '473 patent does not have any such references.) Fields 70-76 reveal the names of the inventors, assignees, and attorney or agents.

11.1.1.2 Drawings

Immediately following the first page are the *drawings* (if any), which illustrate the claimed invention. The drawings are routinely labeled with numbers to facilitate describing the invention and its components in the patent's specification.

11.1.1.3 The Specification

The *specification* describes the claimed invention. Section 112 lists a number of formal requirements that the specification must meet for a patent claim to be valid. *See* § 11.3.3.3. The specification begins by repeating the title of the invention, then listing any related patent applications. The specification typically proceeds by explaining the "field of the invention," another general description of the kind of invention the patent discloses. The "background of the invention" discusses the prior art in the field and the problems the prior art could not address. The "summary of the invention" briefly describes what the patentee has accomplished in the claimed invention. A "brief description of the drawings" commonly follows.

The "detailed description of the invention" is the heart of the specification and the "consideration" the public receives in exchange for the patent grant. It seeks to describe the invention in such detail that a person having ordinary skill in the art could practice the invention. It often explains the invention by explaining the

drawings. All specifications must also disclose the "preferred embodiments" or "best mode" for practicing the invention.

11.1.1.3.1 Claims

The specification concludes with the *claims*. The claims are commonly analogized to the "metes and bounds" of a property deed and serve the same purpose: to delineate the scope of the asset which, in the patent context, is an invention. Each claim represents the legal right to exclude others from making, using, selling, offering to sell, importing, or offering to import the claimed process, machine, manufacture, or composition of matter. A patent may, and often does, contain many claims, which usually become increasingly specific.

An "independent claim" stands on its own. A "dependent claim" refers to a single earlier claim or claims and adds further limitations. To understand all of the limitations of a dependent claim, it is necessary to read that claim together with the claim(s) upon which it depends.

In a case for patent infringement, only some claims may be asserted. Some might not be infringed; further, some may even be invalid. It is important to recognize that each claim bestows distinct legal rights. Invalidity or non-infringement of one or more claims will not undermine other independent claims.

Patent claims have a unique structure. Each claim must be stated as a single sentence. They begin with a *preamble*, which briefly describes the nature of the claimed invention. For example, a claim for a paper clip could begin, "A device for keeping papers together . . . ." In some circumstances, the preamble can act as an additional limitation on the scope of the claimed invention. *See* § 5.2.3.2.5.

The claim then has a *transition*, which demarcates the preamble from the list of restrictions or limitations that define the claimed invention. Patents often feature the same transitions, which have developed highly specific meanings in the case law. The transition "comprising" is understood to mean "including but not limited to"—that is, that the claim covers the listed limitations, as well as anything that includes all of the limitations and additional features. The transition "consisting of" means that the claim covers only the combination of the limitations listed, and does not cover something that incorporates additional material along with all of the listed restrictions. The transition "consisting essentially of" covers not only products containing the recited limitations, but also those combining modest amounts of additional, unspecified substances, the presence of which would not affect the efficacious properties of the expressly recited ingredients.

After the transition, the claim has a *body* that lists the *limitations* or *restrictions* of the claimed invention. Patentees typically use a method of peripheral claiming to delineate the outer boundaries of the claimed invention. Thus, the claim limitations or restrictions define what remains in the claim. The claim's

body lists all of the features that must be present in the claimed invention and how these restrictions interact with each other.

As an illustration, consider a patent claim for a coffee cup insulator covered by the ’473 patent illustrated in Chart 11.1:

Chart 11.1
Illustration of a Patent Claim

Preamble	A recyclable, insulating beverage container holder,
Transition	comprising
Body	a corrugated tubular member comprising cellulosic material and at least a first opening therein for receiving and retaining a beverage container, said corrugated tubular member comprising fluting means for containing insulating air; said fluting means comprising fluting adhesively attached to a liner with a recyclable adhesive.

Some claims contain words or structures, which, like the transitions, have specific, well-understood meanings. A *means-plus-function* claim defines one or more elements of the claim as a “means for [performing a] function,” as allowed by § 112 ¶ 6. This special type of claim format is interpreted based on how the structure, materials, or acts are described in the specification and to encompass “equivalents thereof” as of the time of filing. *See* §§ 5.2.3.5.2; 11.4.1.4.1.1.

Claims can follow other formats. As noted above, a *dependent claim* refers to a single prior claim and adds further limitations. A *Jepson claim* recites the elements of the prior art, then the transition “the improvement of which comprises,” followed by the further restrictions that represent the advance over the prior art. A *Markush claim* covers an artificial genus of related compositions sharing a common trait, such as “a chemical compound of the formula $COOH–CH_2$-R, where R is selected from the group consisting of R_1, R_2, and R_3.” Markush claims arise principally in the field of chemistry.

Interpreting the scope of claims is one of the principal challenges of patent litigation. The substantive law regarding how to interpret claim terms is presented in Chapter 5.

11.2 Patent Prosecution and the Patent Lifecycle

11.2.1 Institutional Aspects

11.2.1.1 The Patent Office

The United States Patent and Trademark Office is a federal agency in the Department of Commerce responsible for administering the patent and trademark laws. The PTO’s primary function is to examine inventors’ applications and to

determine whether to issue a patent. The PTO also promulgates rules regarding the examination process and records all transfers of patent rights, in similar fashion to a state recordation office under Article 9 of the Uniform Commercial Code.

The PTO employs several thousand scientists and engineers to examine patent applications. Examiners possess a science or engineering degree and are divided by Technology Centers (or group art units). A patent examiner need not hold a law degree and the majority of patent examiners do not. The PTO does, however, provide all examiners with training in patent law and procedure. New examiners also serve an apprenticeship period working with an experienced examiner.

The PTO maintains an extensive website at http://www.uspto.gov/, which provides resources regarding the patent examination process and a searchable database of patents.

11.2.1.2 The Patent Bar

The PTO requires practitioners who prepare and prosecute patent applications on behalf of others to pass a patent bar exam. To sit for the patent bar, applicants must possess a science or engineering degree. One does not need to hold a law degree. Non-attorney members of the patent bar are called patent agents. Collectively, practitioners before the PTO are known as patent prosecutors. The distinction between an inventor's prosecution counsel and trial counsel is critical to protective orders and the scope of attorney–client privilege. See §§ 4.2.5, 4.6.7-9.

Most litigated patents will have been drafted and prosecuted by a professional. Nonetheless, the PTO does allow inventors to pursue their own application even if they have not passed the patent bar.

11.2.1.3 The Board of Patent Appeals and Interferences

The Board of Patent Appeals and Interferences (BPAI) is an administrative body within the PTO that hears appeals from decisions of patent examiners, such as refusals to grant a patent application.[1] Applicants may appeal decisions of the BPAI to the Federal Circuit.

The BPAI is often one of the first bodies to respond to changes in the substantive law of patent validity. For example, the BPAI has been at the forefront of interpreting the Supreme Court's *KSR* opinion regarding obviousness. *KSR Intern. Co. v. Teleflex Inc.,* 550 U.S. 398 (2007).Despite the BPAI's familiarity with patent

1. The BPAI also conducts "interference proceedings," an adversarial administrative adjudication that determines which of two or more inventors seeking a patent on the same invention has priority. *See* § 135. Any party to an interference proceeding that is dissatisfied with the BPAI decision can pursue a remedy in a district court. *See* § 146.

law, the district court owes it no deference. Only the Federal Circuit creates binding precedent for the district courts when adjudicating patent cases. Nevertheless, the BPAI is an experienced and specialized court and a district court may find its rulings persuasive.

11.2.1.4 Laws Governing the PTO and the MPEP

The patent statute is found in Title 35 of the U.S. Code. The PTO's rules and regulations implementing the patent laws are codified in Title 37 of the Code of Federal Regulations.

The Manual of Patent Examining Procedure (MPEP) is the PTO's operating manual for patent examiners. *See* <http://www.uspto.gov/web/offices/pac/mpep/index.htm>. Because most PTO examiners are not attorneys, it is commonly recommended that patent prosecutors cite to the MPEP and not to the case law during the course of patent prosecution. However, the MPEP is merely a set of interpretations and does not carry the force of law.

Where the substantive patent law is uncertain, the PTO issues guidelines to help examiners apply the law consistently. For example, there are guidelines governing the subject-matter requirement (MPEP § 2106), utility requirement (MPEP § 2107), and written description requirement (MPEP § 2163). Such guidelines represent the PTO's interpretation of the law in those areas, but they are not substantive rule making and do not have the force and effect of law. While such guidelines may be persuasive on an issue, a district court is free to reach its own interpretation. Courts must, however, defer to PTO interpretations of its procedures to the extent they are permissible under the governing statute. *See Cooper Technologies Co. v. Dudas*, 536 F.3d 1330, 1335-37 (Fed. Cir. 2008) (citing *Chevron U.S.A., Inc. v. Natural Res. Def. Council, Inc.*, 467 U.S. 837 (1984)).

11.2.2 Filing a Patent Application

The process of patent procurement is commonly referred to as patent prosecution. Prosecution often consists of a lengthy and detailed interaction between the applicant and the PTO examiner. During this process, the applicant attempts to convince the examiner that the applicant's invention meets the statutory requirements for patentability.

11.2.2.1 Overview of Patent Examination

Patent prosecution begins with an inventor having an idea that she believes is patentable. Although inventors may represent themselves before the PTO, most retain a patent attorney or agent to prepare and prosecute their application. The application contains a description of the invention and claims outlining the

bounds of the intellectual property right sought by the inventor. The prosecutor must also submit an Information Disclosure Statement (IDS) listing all prior art relevant to patentablity of which the inventor is aware.

The PTO assigns the application to an examiner in the most pertinent Technology Center. In addition to confirming that all formalities have been complied with, the examiner conducts a prior art search and assesses whether the proposed claims meet the requirements for patentability (§§ 101, 102, 103, 112).

The first Office Action almost always rejects the patent application. The examiner cites the relevant patent law authority and succinctly explains the reasons for rejection. At this point, the examiner bears the burden of establishing a prima facie case of unpatentability. The applicant then has the opportunity to respond to the Office Action. *See* 37 C.F.R. § 1.111. Arguments made to overcome the examiner's rejections are commonly referred to as "traversing" the rejections. The applicant may argue that the examiner has mischaracterized the specification or the prior art and that the application, or portions thereof, should be allowed as submitted. In the alternative, the applicant may amend the claims.

The examiner may accept the applicant's amendments or arguments and allow the application in whole, or allow only some claims. If the applicant is unable to traverse, the examiner issues a so-called "final rejection." In practice, the rejection is rarely the end of prosecution, which will generally continue until the applicant chooses to abandon the application or the examiner grants the claims. It is common for applicants to continue examination of the application, as discussed below. Alternatively, the applicant can appeal the examiner's rejection to the BPAI, and further still to the Federal Circuit.

Patent prosecution is an ex parte proceeding—only the applicant and the PTO are directly involved. The examiner's actions play a significant role in shaping the contours of many patents. Patent prosecution operates much like a negotiation between the applicant and the PTO.

The average prosecution pendency is three years, although it is not uncommon for prosecution to last five years or longer. The length of time required to prosecute the patent depends on any number of resource, strategic, and other factors and does not correlate with the "strength" of the patent claims. Indeed, lengthy and thorough examination may result in more robust patent claims.

11.2.2.2 The Application

Most applicants choose to file a non-provisional patent application. Non-provisional applications are the "regular" type of patent applications, and are often referred to as "applications." Alternatively, applicants may file a provisional or Patent Cooperation Treaty (PCT) patent application prior to submission of the non-provisional application. These types of applications are described further below.

11.2.2.2.1 Elements of a Non-provisional Patent Application

The general requirements for a non-provisional patent application include: 1) a written specification, including one or more claims; 2) an oath or declaration that the named inventor or inventors are believed to be the original and first inventor or inventors of the claimed subject matter; 3) drawings as required to support the application; and 4) applicable fees (e.g., filing fee, search fee, examination fee, and application size fee). *See* 37 C.F.R. § 1.51; § 111; *see also* MPEP § 601.

11.2.2.2.2 Prior Art Disclosure—Information Disclosure Statement

Applicants present prior art to the PTO using an Information Disclosure Statement. *See* 37 C.F.R. § 1.97. The inventor and those assisting the inventor with the application process are not required to perform an exhaustive search of the prior art, but they must disclose all information of which they are aware. *See* 37 C.F.R. § 1.56. This requirement is part of the applicants' general duty of candor and good faith in dealing with the PTO, which exists for the duration of patent prosecution. The PTO will not issue a patent when faced with either fraudulent conduct or a failure to disclose material information through bad faith or intentional misconduct. *See id.* Such "inequitable conduct" can also render an issued patent unenforceable in later litigation. Applicants requesting accelerated examination must perform a pre-examination search of the prior art and submit the results to the PTO.

11.2.2.2.3 Priority Date

The filing of a patent application establishes the priority date. This date is important in several respects. First and foremost, the filing of an enabled invention constitutes constructive reduction to practice. *See* § 11.3.4.2.2. This can be important because the United States awards patent rights to the first to invent, not the first to file for a patent, when two or more parties claim the same patentable invention. *See* § 102(g).

11.2.2.2.4 Non-Standard Applications

A patent application can also mature from several other types of filings. The most important is the provisional application. The PTO began accepting provisional patent applications on June 8, 1995. *See* § 111(b). Provisional applications must contain a specification and required drawings, but need not contain claims or an oath or declaration. Provisional applications are less expensive to prepare and

file than a non-provisional application and preserve a priority filing date for a later filed non-provisional application. Provisional applications are not examined by the PTO and are subject to abandonment after twelve months.

An applicant can also file an application under the Patent Cooperation Treaty (PCT) to establish a priority date to an invention. Under the PCT, applicants can file a single application in a qualified patent office to initiate prosecution in all signatory countries. Currently over 130 nations have signed the PCT.

Finally, inventors can claim priority for U.S. patent applications based on filings in certain foreign countries, including any World Trade Organization (WTO) member state. *See* § 119. The applicant has twelve months from the time of the foreign filing to submit a U.S. national application claiming the same invention. The date of the foreign filing, however, cannot be used to overcome statutory bars. *See* § 102(b); § 11.3.4.5.

11.2.2.3 Restriction Requirements and Divisional Applications

If a non-provisional application claims multiple independent and unique inventions, the examiner may "restrict" the application. *See* 37 C.F.R. § 1.142. Restriction requires the applicant to elect which invention it intends to pursue in the pending application. The other inventions can be examined in separate "divisional" applications that maintain the priority date of the original application. The examiner can also require a restriction if a reply to an Office Action introduces claims that are distinct from and independent of the invention previously claimed. *See* 37 C.F.R. § 1.145. The applicant may attempt to overcome the restriction requirement on the grounds that the examiner can assess all claims using prior art (*see* 37 C.F.R. § 1.143), but such arguments are typically unsuccessful. However, the examiner may also rejoin restricted applications upon allowance. Restriction is a procedural matter: A patent's validity does not depend on whether it claims multiple inventions. Restriction and division practice does, however, explain the typical manner in which one specification and written description can spawn a family of patents.

11.2.2.4 Publication

Until 2000, pending U.S. patent applications were held in secret by the PTO until issuance. Under this system, patent applicants could draw out prosecution in secret for many years. Such "submarine" patents could emerge out of nowhere many years or decades after filing, resulting in unfair surprise to others who began using the claimed invention during the pendency. Furthermore, if the patent did not issue or the inventor believed trade secrecy to be more advantageous than pat-

enting, the applicant could abandon the application and maintain the invention as a trade secret.

The American Inventors Protection Act of 1999 brought the U.S. into harmony with most foreign patent offices by requiring the PTO to publish non-provisional patent applications 18 months after their filing date. Published applications are available at the PTO's web site. *See* <http://www.uspto.gov/patft/index.html>. An applicant can opt out of publication only by certifying that the applicant has not and will not file any foreign applications on the same invention. Thus, applicants can maintain patent applications being pursued solely in the United States as trade secrets until issuance.

11.2.3 The Prosecution History or "File Wrapper"

The archive of written communications between the PTO and the applicant during patent prosecution is called the "prosecution history" or "file wrapper." The file wrapper is available through the PTO's Patent Application Information Retrieval (PAIR) system, available at http://portal.uspto.gov/external/portal/pair. This "procedural history" is important because, in addition to the patent's specification, correspondence between the patentee and the PTO during prosecution is a primary source used to interpret claim language during litigation. *See Phillips v. AWH Corp.*, 415 F.3d 1303 (Fed. Cir. 2005) (en banc), *cert. denied*, 126 S. Ct. 1332 (2006); § 5.2.2.1.1. Furthermore, the patentee is estopped from recovering through reexamination or during litigation (under the doctrine of equivalents) any subject matter surrendered during prosecution. The following sections explain the file wrapper's contents.

11.2.3.1 Office Actions

The patent examiner's responses are known as "office actions." These statements document the examiner's decisions and underlying reasons. The applicant can respond to the examiner's rejection arguments. This record of office actions and responses determines if and to what extent a patentee narrowed the scope of her claimed invention to overcome a rejection. It also bears on whether the patentee engaged in inequitable conduct. *See* § 11.4.2.3.1.

11.2.3.1.1 Affidavits

The applicant may attempt to overcome certain rejections through the use of affidavits. Rule 131 affidavits are used to establish inventorship prior to the date of prior art arising under §§ 102(a), (e), or (g). *See* 37 C.F.R. § 1.131. This process is known as "swearing behind" the prior art reference. Rule 131 requires an oath or declaration by the inventor along with supporting evidence. Misrepresentations in

Rule 131 affidavits may violate the applicant's duty of good faith and candor, rendering the patent unenforceable.

Rule 132 affidavits contain information seeking to traverse rejections. *See* 37 C.F.R. § 1.132. These are commonly used to submit expert testimony responding to an obviousness rejection.

11.2.3.1.2 Interview Report

Applicants may request a telephone or face-to-face interview with the examiner. *See* 37 C.F.R. § 1.133. The patentee is required to submit a written report of the meeting, although the report can be general. Many practitioners rely on interviews to expedite prosecution by personally engaging the examiner. Some practitioners also use interviews to limit the amount of written correspondence entering the prosecution history.

11.2.3.2 Continuation Applications

Applicants generally have one opportunity to traverse the examiner's rejections before receiving a final rejection. Upon receiving a final rejection, applicants can appeal the examiner's decision to the BPAI. Alternatively (and more commonly), applicants pursue rejected claims by filing a "continuation" application.

A continuation application is a second application for an invention rejected in a previous application. To qualify as a continuation application and claim the benefits of the earlier "parent" application's priority date, the application must be filed while the parent is still pending (i.e., not issued or abandoned), expressly refer to the parent application, identify at least one common inventor, and encompass the same disclosure of the parent application without adding any new matter. *See* § 120. The same invention must be claimed, but the scope of the claims can vary. However, the patent term of the continuation is limited to 20 years from the filing of the earliest application to which it claims priority.

A continuation application might be used when the examiner allows some claims but rejects others. The applicant can cancel the rejected claims, thereby allowing the others to issue as a patent. Furthermore, the applicant can pursue the rejected claims in a continuation application.

11.2.3.3 Continuation-in-Part Applications

A continuation-in-part application (CIP) is similar to a continuation application but introduces new subject matter to the parent application. For example, the inventor may add new data and descriptive material to support the claims. Alternatively, the inventor may have made improvements to the claimed invention and wish to add them in a CIP application. Claims to the new subject matter do

not get the advantage of the priority date of the parent application. The relevant consideration is whether the claims are supported by the disclosure of the parent application under the test set forth in § 112. Claims that are so supported can rely on the parent application's priority date, whereas the other claims have the priority date of the CIP filing. Accordingly, some references might count as prior art for claims introduced in the CIP, but not qualify as prior art for claims in the same application that are supported by the parent application's disclosure. Regardless of when material is added, all claims in a patent expire on the same date—typically 20 years from the earliest parent application's filing date. *See* § 11.2.5.

11.2.3.4 PTO Petition and Appeals

Applicants who reach an impasse with an examiner over procedural issues may petition the Director of the PTO. Such procedural issues include requests for time extensions, reviving abandoned applications, or reviewing a restriction requirement. Petitions are typically resolved in an informal manner by group directors in the PTO.

An applicant may appeal a Final Rejection to the BPAI. *See* § 134. In upholding the rejection, the BPAI may consider any issue of patentability, including written description, enablement, novelty, and nonobviousness. The applicant may appeal adverse decisions of the BPAI to the Federal Circuit. *See* § 141. Alternately, the applicant may bring a civil action against the Director to the U.S. District Court for the District of Columbia. *See* § 145. That court can overturn BPAI decisions and order the PTO to issue a patent. The Federal Circuit also hears appeals from the district court. A civil suit may be more expensive than direct appeal to the Federal Circuit, but has the advantage that new evidence can be submitted to the D.C. District Court whereas the Federal Circuit only considers the PTO record.

11.2.4 Patent Duration

A patent whose application was filed on or after June 8, 1995, expires 20 years after the earliest effective U.S. filing date, *see* § 154(a)(2), unless subject to various extensions discussed below. Prior to this date, patents expired 17 years from the issuance date. For patents that were granted or pending before June 8, 1995, the patent expires either 20 years after the date of filing or 17 years from issuance, whichever is later. *See* § 154(c)(1). All claims in a CIP application expire based on the effective filing date of the parent application, regardless of whether a claim's priority derives from the CIP application or its parent.

This change in the patent term harmonized the U.S. patent laws with those in most other nations. It also partially addressed the problem of "submarine patents." Under the old law, a patentee could use continuation practice to keep a patent application pending for years (or sometimes decades) until an unsuspecting third

party began practicing the claimed invention. The patentee could then get the submarine patent issued and sue for infringement. The current law alleviates this abuse by tying patent duration to the filing date, thereby imposing the costs of prosecutorial delay upon the applicant. In addition, the doctrine of prosecution laches can be raised as a defense in cases of undue prosecutorial delay. *See* § 11.4.2.3.4.1.

The actual patent term commences the date that the patent issues. Thus, the effective term of the patent will be less than 20 years due to the pendency of prosecution. Nonetheless, provisional rights allow a patentee to collect a reasonable royalty from an infringer who had actual knowledge of a published patent application back to the date of actual notice. *See* § 154(d); § 11.4.3.2.

11.2.4.1 Patent Term Adjustments

A patent's duration can be extended to account for certain delays occurring during prosecution. *See* § 154(b). Section 154(b)(1)(A) compensates the patentee for undue delays in prosecution: if the PTO fails to deliver the First Office Action within 14 months of the filing date or if the examiner fails to respond to an Office Action reply within four months, then additional time will be tacked on the patent term. Similarly, § 154(b)(1)(B) extends the patent term if patent prosecution lasts more than three years, not including continuations, interferences, and appeals. Section 154(b)(1)(C) extends the patent term if a patentee successfully overcomes adverse rulings at interference or appeals proceeding, or if the patent was subject to a secrecy order. Patent term adjustments are, however, limited by delays caused by the patentee. *See* § 154(b)(2).

11.2.4.2 Patent Term Restoration

A patent's term can be extended by statutory patent term restorations. For example, the Drug Price Competition and Patent Term Restoration Act of 1984, more commonly known as the Hatch-Waxman Act, extends the patent term for drug-related inventions up to five years when the commercial use of the claimed invention was delayed by regulatory approval. *See* § 156.

11.2.5 Post-Issuance Corrections

Failure of the patentee, or in some cases the PTO, to properly address errors in an issued patent can result in severe ramifications at trial, such as the inability to receive damages or even complete loss of patent rights. The Patent Act provides several procedures to correct errors in the patent document even after the patent has issued: disclaimer, correction, reissue, and reexamination.

11.2.5.1 Disclaimers

Under § 253, a patentee (without deceptive intent) may disclaim any complete patent claim by filing a request with the PTO. A patentee may also disclaim or dedicate to the public the entire patent term or any remaining portion of the patent term. The latter process is called a "terminal disclaimer." This process is frequently used when the PTO rejects a patent application as obvious over an earlier patent or application by the same person. By filing the terminal disclaimer, the applicant agrees that the later filed application will expire at the same time as the prior patent (or application).

11.2.5.2 Correction

Minor errors in an issued patent, such as typographical errors, omissions of an assignee, or printing of an original rather than amended claim, can be corrected with a Certificate of Correction. *See* §§ 254 (correction of PTO mistake); 255 (correction of applicant mistake). These corrections cannot add new matter or change the scope of a patent claim such that reexamination would be required.[2] A patent's named inventors can be corrected if the improper addition or omission was made without deceptive intent. *See* § 256.

Failure to inspect and correct an issued patent can be costly for the patentee. In *Sw. Software, Inc. v. Harlequin, Inc.*, 226 F.3d 1280 (Fed. Cir. 2000), the PTO neglected to include a 330-page appendix with the issued patent. The accused infringer raised the issue during litigation. The patentee subsequently had the patent corrected under § 254. Nonetheless, the Federal Circuit held that a correction is only effective for causes of action arising after it was issued and remanded the case to determine whether the specification failed to satisfy the best mode and enablement requirements absent the appendix. The court stated "it does not seem to us to be asking too much to expect a patentee to check a patent when it is issued in order to determine whether it contains any errors that require the issuance of a certificate of correction." *Id.* at 1296.

11.2.5.3 Reissue

Whereas the correction procedure addresses minor, non-substantive alterations of an issued patent, reissue proceedings allow a patentee to correct a substantive defect in the specification or to narrow or broaden the scope of an issued patent.

---

2. For example, the Court of Customs and Patent Appeals, which handled appeals of PTO rejections prior to the creation of the Federal Circuit, held that a patentee could correct a chemical name in a specification whose errors resulted from translation from Japanese to English. *In re Oda*, 443 F.2d 1200 (CCPA 1971).

Reissue may occur when, because of error without deceptive intent, a patent is "deemed wholly or partly inoperative or invalid, by reason of a defective specification or drawing, or by reason of the patentee claiming more or less than he had a right to claim in the patent." § 251.

To obtain reissuance, the patent owner must surrender the original patent along with a reissue application and an oath attesting to the alleged error(s). The patent is then reprosecuted and may reissue in original or amended form. The PTO essentially reexamines the patent and can reject *any* claims in the patent, not only those amended by the patentee. As a result, the entire patent loses its presumption of validity during the reissue process. The reissued patent is subject to invalidation in the same manner as the original patent. Moreover, an accused infringer may defend on the grounds that the reissue itself was invalid.

The PTO assigns reissued patents a new number, with the prefix "Re"—e.g., "U.S. Patent No. Re. 50,000." Unlike the original proceedings, CIP applications (i.e., addition of new matter) are not allowed, and third parties are notified of the reissue request and may submit evidence and arguments. The duration of a reissued patent term cannot extend beyond that of the original patent.

The PTO requires the patentee to provide an oath or declaration attesting to at least one error in the original patent that arose without deceptive intent. *See* 37 C.F.R. § 1.175.[3] Thus, reissue cannot be used to revive a patent rendered unenforceable because of inequitable conduct. The issued patent must contain "a defective specification or drawing," or the patentee must have claimed "more or less than he had a right to claim." § 251. Most patents are reissued to amend the claims, often to overcome newly discovered prior art that would invalidate one or more claims. Rather than filing a terminal disclaimer that surrenders an entire claim or claims, the patentee can request reissuance with narrower claims that avoid the prior art. During the two-year window following issuance, a patentee can also attempt to add or broaden claims, assuming that the original specification supports the amendments.

11.2.5.3.1 Narrowing Reissues

A patent owner may seek to narrow the scope of a patent at any point during the life of a patent.

---

3. The patentee is also held to a duty of candor regarding the reasons for the mistake. In *Hewlett-Packard Co. v. Bausch & Lomb, Inc.*, 882 F.2d 1556 (Fed. Cir. 1989), the patentee asserted a patent that was reissued with additional dependent claims. The original patent agent stated the additional claims were omitted from the original patent because of difficulty contacting the inventor, yet the record showed that the agent and inventor communicated regularly during prosecution. As a result, the Federal Circuit invalidated all claims added or amended during reissue, but did not disturb the unchanged claims from the original patent.

11.2.5.3.2 Broadening Reissues

Broadening reissues are sought when the patentee's error is claiming less than the original specification, and presumably the prior art, would allow. The original specification must provide adequate written description for, enable, and disclose the best mode for the broader claim. A patentee has two years from the date of allowance to seek broader claims. § 251. The courts have construed this to mean "broader in any respect," so that an attempt to broaden a single claim limitation must be made within the two-year period, even if other amendments narrow the claim's overall scope. *See Ball Corp. v United States*, 729 F.2d 1429 (Fed. Cir. 1984). A patentee who has timely filed a broadening reissue application may continue to make broadening amendments outside the two-year window. *See In re Doll*, 419 F.2d 925 (CCPA 1970). But a patentee who sought a reissue within two years on other grounds cannot then seek to broaden claims outside the statutory period. *See In re Graff*, 111 F.3d 874 (Fed. Cir. 1997) (distinguishing *Doll* on the grounds that in that case the public was timely notified that the patentee sought broadened claims). A patentee's rights to enforce a broadening reissue are constrained by the doctrine of intervening rights. *See* § 252; § 11.2.6.3.2.2.

11.2.5.3.2.1 The Recapture Rule

The recapture rule is a judicially created limitation on broadening reissues that works similarly to prosecution history estoppel. *See* § 11.4.1.4.2.1.2. The rule bars a patentee from seeking to reissue claims that regain subject matter that was surrendered in order to obtain allowance during the original prosecution. Surrender of subject matter to overcome patentability rejections does not constitute an "error" within the meaning of the patent laws. *See Ball Corp. v United States*, 729 F.2d 1429 (Fed. Cir. 1984).[4]

11.2.5.3.2.2 Intervening Rights

Although reissue claims that are "substantially identical" to those of the original patent "have effect continuously from the date of the original patent," § 252

4. In *Mentor Corp. v. Coloplast, Inc.*, 998 F.2d 992 (Fed. Cir. 1993), Mentor had patented a condom catheter that transferred adhesive from the outer to inner surface during unrolling. The transfer limitation was added during prosecution to overcome an obviousness rejection. After the patent issued, Mentor timely filed a broadening reissue application without the transfer limitation, asserting as error that it was entitled to the broader claim. In a subsequent infringement action, the Federal Circuit held that Mentor's "deliberate and intentional" amendments made during initial prosecution to overcome issues of patentability were not errors within the meaning of the reissue statute and hence the broader reissued claim was invalid under the recapture rule.

¶ 1, claims that were modified at reissue, for any reason, are subject to a reliance-type interest referred to as intervening rights. *See* § 252 ¶ 2. This doctrine recognizes that third parties may rely on the claims of an issued patent, and thus provides a safe harbor to parties practicing subject matter covered by the amended claims. Unlike the recapture rule, which can invalidate claims in a reissued patent, intervening rights are applied on a party-by-party basis.

The patent laws codify two types of intervening rights: absolute and equitable. Under the absolute intervening rights doctrine, a court may allow a party who "made, purchased, offered to sell, or used" anything prior to reissue to continue to use or sell that thing. § 252. These rights do not allow a party to make new items after the reissue is granted, only to use or sell products that were already in existence. In addition, there are no intervening rights for subject matter that was claimed in the original patent.

Equitable intervening rights allow a court to authorize continued practice of an invention claimed in a reissue patent "to the extent and under such terms as the court deems equitable for the protection of investments made or business commenced before the grant of the reissue." *Id.* Again, these rights do not apply for inventions claimed in the original patent. As an example, a district court may provide equitable relief when a party has invested heavily in practicing the invention claimed at reissue. Such relief is subject to review by the Federal Circuit for abuse of discretion.[5]

Intervening rights can also apply when claims are narrowed. For example, a third party may practice a claimed invention in the belief that the applicable claims in the original patent are invalid. The patentee may later reissue the patent with narrowed claims that overcome the presumed invalidity arguments but still read on the third party's activities. Under such circumstances, a court may apply the intervening rights doctrine to the narrowed reissue patent.

---

5. In *Seattle Box Co. v. Industrial Crating & Packing, Inc.*, 756 F.2d 1574 (Fed. Cir. 1985), Seattle Box patented a system for bundling oil pipes. Industrial Crating acquired materials to bundle pipes in such a way that did not literally read on Seattle Box's claims. After bringing suit for infringement, Seattle Box obtained a broadening reissue that arguably covered Industrial Crating's system. Industrial Crating assembled its bundles after the reissue was granted, and the district court denied the defense of intervening rights. The Federal Circuit reversed, holding that equitable intervening rights applied. The Federal Circuit noted that Industrial Crating relied on advice of counsel when designing around the original patent and that it had pending orders for the unassembled inventory before the reissue was granted. The court observed that "the new reissue claims in this case present a compelling case for the application of the doctrine of intervening rights because a person should be able to make business decisions secure in the knowledge that those actions which fall outside the original patent claims are protected." *Id.* at 1580.

11.2.5.4 Reexamination

The reexamination process, §§ 301-307, was introduced in 1980 to provide an expedient and low-cost alternative to litigation for resolving issues of invalidity regarding certain forms of prior art. The rules allow any party, including the patentee, competitors, or even the PTO Director, to challenge patent claims that may be invalid based upon prior patents and publications. If the PTO determines that the cited art or any patents and publications discovered by the PTO itself raises a "substantial new issue of patentability," § 303(a), prosecution is reopened and proceeds in a manner similar to reissue. Requests for reexamination are limited to patents and publications because the PTO is considered an expert in determining patentability over printed materials. Other issues of patentability, such as written description, enablement, on sale or public use activities, or inequitable conduct, may require testimony and discovery, and thus were thought better handled through litigation.

The patent laws recognize two forms of reexamination: (1) ex parte; and (2) inter partes. Ex parte reexamination can be requested by anyone, but reprosecution proceeds primarily between the patentee and the assigned examiner. *See* §§ 301-07. Inter partes reexamination was introduced in 1999 and allows third parties extensive involvement during reprosecution, including appeal of adverse decisions to the BPAI and Federal Circuit. *See* §§ 311-18. Inter partes reexamination may, however, result in estoppel effects at trial against the party that initiated the inter partes proceeding, as described below. Following reexamination, the PTO issues a "Reexamination Certificate" that becomes part of the official patent document and states the result (cancellation, confirmation, and/or amendment of claims) of the reexamination proceeding.

11.2.5.4.1 Ex Parte Reexamination

The party initiating an ex parte reexamination must provide the PTO with a written request setting forth the pertinence of the cited references and explaining how they relate to the claims being challenged. § 302. A PTO examiner then determines whether the cited art raises a "substantial new issue of patentability." § 303(a). The PTO has interpreted this standard to require both "a substantial likelihood that a reasonable examiner would consider the [reference] important in deciding whether or not the claim is patentable," and that the PTO has not previously considered the same issue, which includes inquiry into whether the new cited art is merely cumulative of material considered during prior examination. *See* MPEP § 2242. The cited reference need only be "important"; it need not raise a *prima facie* case of unpatentability.

Denial of reexamination cannot be appealed. § 303(c). If the PTO issues an order for reexamination, the patentee may file a preliminary statement including

proposed amendments or new claims. § 304. The party requesting reexamination may respond to the statement, but any further actions taken at reprosecution involve only the patentee and the examiner. § 305. In practice, patentees often decline to submit preliminary statements so as to limit further third-party participation. The patentee retains the ability to respond to examiner actions in much the same manner as during prosecution.

After the preliminary statement and reply period, reexamination is conducted much like initial prosecution between an examiner and the patentee. The patentee can add and amend claims so long as the amendments are supported by the original filing according to § 112, ¶ 1. However, the patentee may not introduce amendments that enlarge claim scope. Indeed, the Federal Circuit held a patent invalid where the PTO allowed broadened claims at reexamination. *See Quantum Corp. v. Rodime, PLC*, 65 F.3d 1577 (Fed. Cir. 1995). But the patentee may seek a reissue for broadening amendments that arise during the course of reexamination. *See* 37 C.F.R. § 1.552. The statute requires that reexaminations are conducted with "special dispatch" by the PTO, including both examination and appeals to the BPAI. § 305. There is no continuation practice in reexaminations. The patentee can appeal adverse rulings to the BPAI or federal courts. *See* §§ 305-06.

Like reissue proceedings, patent claims lose their presumption of validity during reexamination because the PTO has recognized a substantial new issue of patentability. The presumption is restored for claims that survive reexamination in original or amended form. The PTO cancels claims determined to be unpatentable. *See* § 307(a). As with reissue, the doctrine of intervening rights applies to any claims added or amended during reexamination proceedings. *See* § 307(b); § 11.2.6.3.2.2.

It is not uncommon for a defendant to file for reexamination after the patentee initiates an infringement action. In this situation, the district court and PTO find themselves simultaneously considering the validity of the same patent. Unlike inter partes reexamination (discussed below), the patent laws do not specify how the courts and PTO should proceed. However, the Federal Circuit directly considered this issue in *Ethicon, Inc. v. Quigg*, 849 F.2d 1422 (Fed. Cir. 1988). The court held that because the patent laws specify that reexamination must proceed with "special dispatch," the PTO Director could not stay reexamination due to concurrent litigation. However, because federal courts have the power to manage their own dockets, courts often exercise their discretion to stay the litigation. The Federal Circuit was not persuaded that concurrent proceedings are necessarily wasteful or in conflict. The court also noted that the PTO disallows or invalidates claims under a preponderance of the evidence standard for unpatentability, whereas district courts determine whether a patent challenger carried its "burden of establishing invalidity [under a clear and convincing evidence standard] *in the particular case before the court*." *Id.* at 1429 n.3 (emphasis added). As a result, a district court's finding that a patent was not proven invalid does not ordinarily

create collateral estoppel effects on the PTO (during reexamination) or upon other courts. *See In re Swanson*, 540 F.3d 1368 (Fed. Cir. 2008) (holding that prior prior judgment by Article III court upholding validity of claim was no bar to PTO, as executive agency, from finding substantial new question of patentability regarding issue that had not been considered by PTO.) Of course, a judicial finding of invalidity does bar enforcement of the patent in subsequent proceedings. See *Blonder-Tongue Labs., Inc. v. University of Illinois*, 402 U.S. 313 (1971); *see generally* § 5.3.

Although alleged infringers may view reexamination as a "cheap" method to escape infringement, a claim whose validity is reconfirmed by the PTO may appear stronger at trial having passed muster twice at the PTO.

11.2.5.4.2 Inter Partes Reexamination

Inter partes reexaminations are available for patents granted on applications filed on or after November 29, 1999. *See* 37 C.F.R. § 1.913; *Cooper Technologies Co. v. Dudas*, 536 F.3d 1330, 1332-34 (2008). Like ex parte reexaminations, any party may request inter partes reexamination based on publications or patents that raise a substantial new issue of patentability. *See* §§ 311, 313. The PTO determines whether to allow the reexamination, and subsequent reprosecution is conducted like initial prosecution but with special dispatch. *See* §§ 312, 314. Unlike ex parte reexamination, the requesting party remains fully involved in the proceeding and can submit one written comment to any office response by the patentee. The requesting party can appeal adverse decisions to the BPAI or federal courts. *See* §§ 314-15.

Inter partes examinations have important ramifications for litigation proceedings. First, the Patent Act provides that the patentee may obtain a stay of ongoing litigation involving claims subject to an inter partes reexamination order. *See* § 318. However, the courts may deny "a stay [that] would not serve the interests of justice." *Id.* In addition, a third-party requester is estopped from later raising any issue of invalidity that the party raised, *or could have raised*, during any prior inter partes reexamination. *See* § 315(c). The third-party requester remains free to challenge the patent claims on other grounds, including newly discovered prior art unavailable to the third-party or PTO during the reexamination.

11.2.5.5 Reissue Versus Reexamination

Reaffirmation of patent claim validity through reissue or reexamination can be a useful means of "gold-plating" the claims for purposes of enforcement or licensing. Nonetheless, such proceedings expose patentees and third-party challengers to various risks. As noted above, accused infringers have successfully defended on the grounds that reissue or reexamined patents were invalid due to improper allowance

by the PTO. *See Quantum Corp. v. Rodime, PLC*, 65 F.3d 1577 (Fed. Cir. 1995) (invalidating patent where the PTO allowed broadened claim scope at reexamination); *Mentor Corp. v. Coloplast, Inc.*, 998 F.2d 992 (Fed. Cir. 1993) (invalidating a reissue patent where the PTO allowed the patentee to recapture claim scope surrendered during initial prosecution). And third party challengers who initiate inter partes reexaminations lose the ability to relitigate matters that were or could have been raised during these proceedings. Chart 11.2 summarizes and contrasts reissue and reexamination proceedings.

Chart 11.2
Reissue and Reexamination Proceedings

	Reissue	Reexamination	
		Ex parte	Inter partes
Requesting party	Patentee	Any	Any
Third-party involvement	None	Request and response to preliminary statement by patentee	All stages
Grounds	Error without deceptive intent	Substantial new issue of patentability	Substantial new issue of patentability
Prior art	Any	Patent or publication	Patent or publication
Broadening amendments	Allowed within two years of grant, but must be supported by § 112, ¶ 1.	Not allowed	Not allowed
Abandonment	Patentee can abandon and have original patent returned	Not Applicable	Not Applicable
Interferences	Patentee can copy claims to provoke an interference	Not Applicable	Not Applicable
Stay of concurrent litigation	Discretion of court	Discretion of court	At patentee's request unless court believes the stay would not serve the interests of justice
Recapture Rule	Applies	Not applicable	Not applicable
Intervening rights	Applies	Applies	Applies

11.2.6 The Presumption of Validity

A patent is presumed valid and a party asserting invalidity must prove the facts to establish a claim's invalidity by clear and convincing evidence. § 282; *Kaufman Co. v. Lantech, Inc.*, 807 F.2d 970, 973-74 (Fed. Cir. 1986). The 1952 Patent Act codified the judge-made presumption that the rigor of the PTO's examination process should render an issued patent presumptively valid. The justification for the presumption of validity—that the PTO has already considered the validity of the claim—has been questioned where the references asserted against a claim's validity were not presented to the PTO examiner. In such situations the Federal Circuit has suggested that the burden of proof should remain with the challenger, but that it may "be facilitated" or more easily met because the examiner never considered the asserted reference. *Kaufman Co.*, 807 F.2d 973; *Jervis B. Webb Co. v. S. Sys., Inc.*, 742 F.2d 1388, 1393 n.4 (Fed. Cir. 1984). The Supreme Court has made a similar observation, stating that, "the rationale underlying the presumption—that the PTO, in its expertise, has approved the claim—seems much diminished here," *KSR Int'l Co. v. Teleflex, Inc.*, 127 S. Ct. 1727, 1745 (2007), in a case in which the PTO had not considered the full range of prior art bearing on obviousness. Therefore, as a practical matter, courts should not accord as strong a presumption of validity to patents attacked on the basis of pertinent prior art not revealed in prosecution as to patents attacked on the basis of the same references considered by the PTO.

11.3 Validity

A patent claim must meet five requirements to issue as part of a valid patent: (1) patentable subject matter; (2) utility; (3) disclosure; (4) novelty; and (5) nonobviousness. Failure to clear any one of these hurdles will invalidate the patent claim.

11.3.1 Patentable Subject Matter (§ 101)

In order to be eligible for patent protection, an invention must fit into one of the four § 101 categories of "process, machine, manufacture, or composition of matter." Although the Patent Act does not contain any express exclusions, the Supreme Court has held that natural phenomena, mental processes, and abstract intellectual concepts are ineligible for patent protection. *See Gottschalk v. Benson*, 409 U.S. 63, 67 (1972); *see also Funk Brothers Seed Co. v. Kalo Inoculant Co.*, 333 U.S. 127, 130 (1948) (fundamental scientific principles are "part of the storehouse of knowledge" and manifestations of laws of nature are "free to all men and reserved exclusively to none"); *Mackay Radio & Tel. Co. v. Radio Corp. of Am.*, 306 U.S. 86, 94 (1939) ("a scientific truth, or the mathematical expression of it, is not

patentable invention"); *O'Reilly v. Morse*, 15 How. 62, 14 L.Ed. 601 (1854); *In re Bilski*, 545 F.3d 943 (Fed. Cir. 2008) (en banc) (a process claim cannot preempt a "fundamental principle" (defined as a law of nature, a natural phenomenon, or an abstract idea); thus, it must be tailored narrowly enough to encompass only a particular application of a fundamental principle so as not to preempt the principle itself); *In re Nuijten*, 500 F.3d 1346 (Fed. Cir. 2007) (a watermarked electromagnetic signal does not fall into any of the four categories: processes require action, and wave-particle duality does not make the signal tangible). As explained by Justice Breyer, the reason for these exclusions is that too much patent protection can impede rather than "promote the Progress of Science and useful Arts," the constitutional objective of patent protection. *Lab. Corp. of Am. Holdings v. Metabolite Labs., Inc.*, 548 U.S. 124,, 125-27 (2006) (Breyer, J. dissenting) (citing U.S. Const., Art. I, § 8, cl. 8) (dismissing certiorari as improvidently granted). In that case, the patentee sought to patent a correlation between high levels of the amino acid homocysteine in the blood and deficiencies of two essential vitamins, folate (folic acid) and cobalamin (vitamin B). Justice Breyer, joined by Justices Stevens and Souter, concluded that such a correlation fell clearly within the "natural phenomenon" exclusion from patent eligibility.

Whereas a newly discovered mineral or plant found in nature or a natural principle (such as Newton's law of gravity or Einstein's theory of relativity) cannot be patented, anything physically made—such as a synthetic chemical, genetically engineered organism, or mouse trap—is eligible for patent protection. *See Diamond v. Chakrabarty*, 447 U.S. 303, 307-09 (1980). Uses of things found in nature and applications of scientific principles to real world problems can also be patented. Furthermore, non-naturally occurring living organisms, produced through genetic engineering, may be patented. *Id.*

In *Chakrabarty*, the Supreme Court interpreted the scope of patent-eligible subject matter broadly, stressing that § 101 encompasses any invention falling within the four designated categories. *Id.* at 308-09. The Supreme Court also looked to the legislative history of the 1952 Patent Act, from which it concluded that "Congress intended statutory subject matter to 'include anything under the sun that is made by man.'"[6] *Id.* at 309.

---

6. It should be noted that the Court selectively quoted the legislative history. The full statement is arguably less expansive:

> Section 101 sets forth the subject matter that can be patented, "subject to the conditions and requirements of this title." The conditions under which a patent may be obtained follow, and section 102 covers the conditions relating to novelty.
>
> A person may have "invented" a machine or manufacture, which may include anything under the sun that is made by man, but it is not necessarily patentable under section 101 unless the conditions of the title are fulfilled.

H.R. Rep. No. 82-1923 at 6 (1952).

The patentability of several categories of "invention" remain controversial, or at least not conclusively resolved.

11.3.1.1 Isolated and Purified Natural Substances (Including DNA Sequences)

Given the unpatentability of substances found in nature, the patentability of DNA sequences (as opposed to new and nonobvious uses of such sequences) would appear to be questionable since such compositions of matter are derived directly from the cells of living organisms. Yet the Federal Circuit and the Patent Office consider DNA sequences derived from living organisms to be patentable so long as the patentee can establish credible utility. The jurisprudential basis for the patentability of such substances traces back to *Parke-Davis & Co. v. H.K. Mulford & Co.*, 189 F. 95 (S.D.N.Y. 1911), *aff'd*, 196 F. 496 (1912), in which Judge Learned Hand upheld a patent on a *purified* form of adrenaline (isolating the extract in the form of a chemical base (as opposed to the salt (the base combined with an acid)). The purified adrenaline overcame the negative side effects associated with prior art salts (which were also extracted from animal suprarenal glands). While a novel process for isolating the compound as well as novel uses of the compound thus derived would clearly be patentable, Judge Hand went further to find the composition itself to be eligible for patent protection.

Scholars have shown how this case departed from nineteenth-century precedent, *see* Linda J. Demaine & Aaron Xavier Fellmeth, *Reinventing the Double Helix: A Novel and Nonobvious Reconceptualization of the Biotechnology Patent*, 55 Stan. L. Rev. 303 (2002), yet it is now reasonably well established that isolated and purified compositions derived from naturally occurring substances are eligible for patents. Thus, while a gene or a genetic sequence in its natural state cannot be patented, a patent may issue if the naturally occurring gene is synthesized from its original state and ascribed a useful function. *See* Utility Examination Guidelines, 66 Fed. Reg. 1092, 1093 (Jan. 5, 2001). Much of the patenting that supports the biotechnology industry is based on this interpretation, although it has yet to be directly addressed by the Supreme Court.

11.3.1.2 Computer Software

During the 1960s and 1970s, the PTO and the Supreme Court expressed skepticism about the patentability of computer software, citing the unpatentability of mental steps, abstract principles, and mathematical formulas. *See Parker v. Flook*, 437 U.S. 584 (1978); *Gottschalk v. Benson*, 409 U.S. 63 (1972). Just a few years later, however, relying on the broad interpretation of patent eligibility set forth in its 1980 *Chakrabarty* decision, the Supreme Court upheld patent eligibility for a rubber curing process utilizing computer software. *See Diamond v. Diehr*, 450

U.S.175 (1981). The decision emphasized that patent eligibility should be evaluated on the basis of the patent claim as a whole (and not merely the presence of mathematical formula) to determine when it is performing a function that the patent laws were designed to protect (e.g., transforming or reducing an article to a different state or thing). *Id.* at 188-93.

Over the ensuing two decades, the Federal Circuit gradually eroded the requirement of physical, post-calculation activity to the point that software claims became eligible for patent protection so long as they produced a "useful, concrete, and tangible result." *See State Street Bank & Trust Co. v. Signature Fin. Group, Inc.*, 149 F.3d 1368 (Fed. Cir. 1998). In 2008, the Federal Circuit shifted direction, overruling the applicability of the "useful, concrete, and tangible" test for patentability of processes under § 101 and emphasizing the need to ensure that a process claim does not preempt a fundamental principle. See *In re Bilski*, 545 F.3d 943 (Fed. Cir. 2008) (en banc) (concerning the patentability of claims to a method of managing the risk of commodity prices). The majority interpreted Supreme Court jurisprudence to "enunciate[ ] a definitive test to determine whether a process claim is tailored narrowly enough to encompass only a particular application of a fundamental principle rather than to pre-empt the principle itself. A claimed process is surely patent-eligible under § 101 if: (1) it is tied to a particular machine or apparatus, or (2) it transforms a particular article into a different state or thing." *See id.* at 954. The transformation must be central to the purpose of the claims process. Furthermore, the claim must contain "meaningful limits" on the scope of protection. The machine-or-transformation test is not a physicality test—i.e., a claim can still be patentable even if it does not recite sufficient "physical steps." Nonetheless, "a claim that recites 'physical steps' but neither recites a particular machine or apparatus, nor transforms any article into a different state or thing, is not drawn to patent-eligible subject matter." *Id.* at 961. A "claimed process wherein all of the process steps may be performed entirely in the human mind" fails the machine-transformation test and hence would not be patent-eligible under § 101. *Id.* at 961, n.26.

11.3.1.3 Business Methods

Courts have long questioned the eligibility of business methods for patent protection on various grounds, including that they do not constitute an "art,"[7] lack "invention," and are mere abstractions or ideas. *See Loew's Drive-In Theatres v. Park-In Theatres*, 174 F.2d 547 (1st Cir. 1949) (rejecting patent for open air drive-in theatres); *Hotel Sec. Checking Co. v. Lorraine Co.*, 160 F. 467 (2d Cir. 1908) (re-

7. Prior to the 1952 Act, § 101 used the term "art" rather than "process" in defining the categories of patentable subject matter.

jecting patent on a method for cash-registering and account-checking designed to prevent frauds and peculation by waiters and cashiers in hotels and restaurants on grounds of novelty and unpatentability); *Fowler v. City of New York*, 121 F. 747 (2d Cir. 1903) (rejecting patent on a method of handling the passengers to secure quick delivery at various points between the ends of an express route); *U.S. Credit Sys. Co. v. Am. Credit Indem. Co.*, 59 F. 139 (2d Cir. 1893) (rejecting patent for a means of insuring against loss of freight). These cases, however, intermingled the questions of novelty, nonobviousness, and patent eligibility; and *Loew's* court's statement that "a system for the transaction of business, such, for example, as the cafeteria system for transacting the restaurant business, or similarly the open-air drive-in system for conducting the motion picture theatre business, however novel, useful, or commercially successful is not patentable apart from the means for making the system practically useful, or carrying it out," could well be considered dicta. *Loew's*, 174 F.2d at 552.

The Federal Circuit expressly rejected the exclusion of methods of doing business in *State Street Bank & Trust Co. v. Signature Fin. Group, Inc.*, 149 F.3d 1368, 1375 (Fed. Cir. 1998).

> We take this opportunity to lay this ill-conceived exception to rest. Since its inception, the "business method" exception has merely represented the application of some general, but no longer applicable legal principle, perhaps arising out of the "requirement for invention"—which was eliminated by § 103. Since the 1952 Patent Act, business methods have been, and should have been, subject to the same legal requirements for patentability as applied to any other process or method.

While overruling the *State Street Bank* articulation of the patent eligibility test—that a claim must merely produce a "useful, concrete, and tangible result"—the *Bilski* decision nonetheless rejected calls for a categorical business method exclusion. 545 F.3d at 960. There is little question, however, that abstract business methods are ineligible for patent protection. Even before *Bilski*, the Federal Circuit signaled a shift away from broad eligibility for business method patents in *In re Comiskey*, 499 F.3d 1365 (Fed. Cir. 2007). The panel in *Comiskey* affirmed the PTO's rejection of the patent on a method of mandatory arbitration, observing that:

> [With the abuses of the Crown's grant of business monopolies] in mind, the framers consciously acted to bar Congress from granting letters patent in particular types of business. The Constitution explicitly limited patentability to "the national purpose of advancing the useful arts—the process today called technological innovation."

Id. at 1375 (quoting *Paulik v. Rizkalla*, 760 F.2d 1270, 1276 (Fed. Cir. 1985) (en banc)). The panel grounded its rejection on the unpatentability of "abstract

ideas"—which it defined as methods having no practical application or those that do not operate on, transform, or otherwise involve another class of statutory subject matter (i.e., a machine, manufacture, or composition of matter). The court considered mental processes standing alone to be an example of the latter category of "abstract ideas." As noted in § 11.3.1.2, the *Bilski* decision provided a fuller explication of the contours of patent eligibility for processes, holding that process claims must either be drawn to tied to a particular machine or apparatus or transform a particular article into a different state or thing.

11.3.2 Utility (§ 101)

Section 101 requires that an invention be "useful" to be patentable. Whether an invention meets the utility requirement is decided from the perspective of a person having ordinary skill in the art. Because most inventions have a clear utility (and "inventions" of questionable utility will typically be flagged during prosecution), the utility requirement rarely arises in litigation. Utility can arise where a claimed invention does not work for its intended purpose. The two areas in which utility tends to arise in litigation with some frequency are in the fields of chemistry and biotechnology, where inventors seek to obtain patents on compositions of matter before they have conclusive evidence of their utility.

The Supreme Court provided the framework for addressing this question in *Brenner v. Manson*, 383 U.S. 519 (1966). The patentee sought protection for an adjacent homologue[8] of a steroid demonstrated to have tumor-inhibiting effects in mice. The inventor had yet to establish such properties for the compound at issue and there was high unpredictability of compounds in the relevant field of chemistry. In rejecting the patent on the basis of lack of proven utility, the Supreme Court commented that

> the basic *quid pro quo* contemplated by the Constitution and the Congress for granting a patent monopoly is the benefit derived by the public from an invention with substantial utility. Unless and until a process is refined and developed to this point—where specific benefit exists in currently available form—there is insufficient justification for permitting an applicant to engross what may prove to be a broad field.

Id. at 534-35. The Court required patentees to establish credible, specific, and substantial utility.

Thus, chemical compounds are not rendered useful merely because they have analogues that are useful. Utility in such cases will depend on the degree of predictability within the art and structural similarity between the claimed compound

8. An adjacent homologue is a member of a structurally related chemical series.

and others known to have useful properties. Furthermore, an invention must be useful for something more than further research on the product of the invention. If an invented chemical compound, for instance, is being studied extensively as a possible cancer treatment, but no potential to treat cancer has actually been shown, the chemical does not meet the utility requirement. Nor is a process to make that chemical useful. The product of the process must have utility for the process to have utility. "Until the process claim has been reduced to production of a product shown to be useful, the metes and bounds of the monopoly are not capable of precise delineation. . . . Such a patent may confer power to block whole areas of scientific development, without compensating benefit to the public." *Id.* at 534. Additionally, an invention must have proven usefulness beyond use as a chemical probe where the results of such a probe are unknown or where the results of that probe are known to lack utility. *In re Fisher*, 424 F.3d 1365, 1371 (Fed. Cir. 2005).

Note, however, that an invention does not need to be better than other technology, nor must it show commercial success to possess substantial utility. Nor do courts judge the morality of a claimed invention in assessing utility. *See Juicy Whip, Inc. v. Orange Bang, Inc.*, 292 F.3d 728 (Fed. Cir.).

11.3.3 Disclosure (§ 112)

Paragraph 1 of § 112 sets forth the disclosure requirement:

> The specification shall contain a *written description* of the invention, and of the manner and process of making and using it, in such full, clear, concise, and exact terms as *to enable* any person skilled in the art to which it pertains, or with which it is most nearly connected, to make and use the same, and shall set forth the *best mode* contemplated by the inventor of carrying out his invention. (emphasis added)

As interpreted by the Federal Circuit, this provision comprises three distinct requirements: (1) written description—that the inventor conveys to a person having ordinary skill in the art that she "possesses" the claimed invention as of the time of filing the application; (2) enablement—that the specification enable a person having ordinary skill in the art to make and use the invention; and (3) best mode—that the specification reveal the best mode of which the inventor is aware of making and using the invention. Failure to meet any of these requirements will invalidate the inadequately disclosed claim or claims.

11.3.3.1 Written Description

The written description requirement serves to "prevent an applicant from later asserting that he invented that which he did not." *Amgen Inc. v. Hoechst Marion*

Roussel, Inc., 314 F.3d 1313, 1330 (Fed. Cir. 2003). The patentee must "convey with reasonable clarity to those skilled in the art that, as of the filing date sought, he or she was in possession *of the invention*." *Vas-Cath Inc. v. Mahurkar*, 935 F.2d 1555, 1563-64 (Fed. Cir. 1991). Having "possession of the invention" means that the patentee invented what is claimed. *LizardTech, Inc. v. Earth Res. Mapping, Inc.*, 424 F.3d 1336, 1345 (Fed. Cir. 2005). Compliance with the written description requirement is a question of fact. *Vas-Cath*, 935 F.2d at 1563. The patentee need not follow any specific form of disclosure in providing a written description of the invention. *In re Alton*, 76 F.3d 1168, 1172 (Fed. Cir. 1996). The drawings alone may be adequate to satisfy the written description requirement. *Vas-Cath*, 935 F.2d at 1564.[9]

11.3.3.1.1 Policing Continuation Practice

Over the past decade, the Federal Circuit has applied the "written description" doctrine to police efforts by patentees to expand the scope of their patent beyond what they had contemplated at the time of filing to reach rivals' products introduced into the marketplace during prosecution. If the inventor "possessed" these variations at the time of filing (and such embodiments were supported by the earlier disclosure), then the applicant may amend their application during prosecution to add claims reaching the rivals' products. But if the patentee did not "possess" this variation at the time of initial filing, then the amended claims will fail (even if the specification enabled one skilled in the art to make and use them). *See Gentry Gallery, Inc. v. Berkline Corp.*, 134 F.3d 1473 (Fed. Cir. 1998); *see also* § 132(a).

11.3.3.1.2 Biotechnology Patents

Beginning in the mid 1990s, the Federal Circuit required that biotechnology patents disclose specific gene sequences in the application even when the functional properties of the gene (such as the protein it codes for) were already known. *See Regents of the Univ. of Cal. v. Eli Lilly & Co.*, 119 F.3d 1559 (Fed. Cir. 1997); *Fiers v. Revel*, 984 F.2d 1164, 1170-71 (Fed. Cir. 1993). Some have characterized these cases as erecting a "super-enablement" standard for biotechnology inventions. *See* Janice M. Mueller, *The Evolving Application of the Written Description to Biotechnological Inventions*, 13 Berkeley Tech. L.J. 615 (1998). More recently,

9. The written description requirement is distinct from the enablement requirement. *Univ. of Rochester v. G.D. Searle & Co.*, 358 F.3d 916, 921 (Fed. Cir. 2004) ("Although there is often significant overlap between the three requirements [of written description, enablement, and best mode], they are nonetheless independent of each other."). An invention may be described without being enabled, and vice versa. *Id.*

the Federal Circuit has eased this standard by allowing patentees to satisfy the written description requirement by placing several versions of the claimed nucleotide sequences in a public depository. *See Enzo Biochem, Inc. v. Gen-Probe, Inc.*, 323 F.3d 956 (Fed. Cir. 2002); *see also Capon v. Eshhar*, 418 F.3d 1349 (Fed. Cir. 2005) (noting that the requirements for "written description" evolve with the fields of invention).

11.3.3.2 Enablement

To satisfy the enablement requirement, the specification must set forth the "manner and process of making and using [the invention] in such full, clear, concise exact terms as to enable any person skilled in the art to which it pertains, or with which it is most nearly connected, to make and use the same." § 112, ¶ 1. The purpose of the enablement provision is to ensure that "the public knowledge is enriched by the patent specification to a degree at least commensurate with the scope of the claims. The scope of the claims must be less than or equal to the scope of the enablement." *Nat'l Recovery Techs., Inc. v. Magnetic Separation Sys., Inc.*, 166 F.3d 1190, 1195-96 (Fed. Cir. 1999). Enablement is determined as of the effective filing date of the patent.[10] *See Plant Genetic Sys., N.V. v. DeKalb Genetics Corp.*, 315 F.3d 1335, 1339 (Fed. Cir. 2003). Accordingly, after-arising technology should not be considered in the enablement inquiry. Enablement is a question of law based upon underlying findings of fact. *See In re Vaeck*, 947 F.2d 488, 495 (Fed. Cir. 1991).

Enablement is often a matter of degree. Courts evaluate compliance with the enablement requirement by considering whether the specification teaches those skilled in the art to make and use the invention without "undue experimentation." *In re Vaeck*, 947 F.2d at 495 (quoting *In re Wands*, 858 F.2d 731, 737 (Fed. Cir. 1988)). As the Federal Circuit has noted, "[t]hat *some* experimentation may be required is not fatal; the issue is whether the amount of experimentation required is 'undue.'" *Id.* In determining what constitutes undue experimentation, courts apply a standard of reasonableness, taking into account the nature of the invention and the state of the art. Factors to be considered in making such a determination include:

(1) The quantity of experimentation necessary,
(2) The amount of direction or guidance presented,
(3) The presence or absence of working examples,
(4) The nature of the invention,
(5) The state of the prior art,

10. The "effective filing date" of an application is the earlier of the actual filing date or the filing date of an application from which priority is accorded.

(6) The relative skill of those in the art,
(7) The predictability or unpredictability of the art, and
(8) The breadth of the claims.

In re Wands, 858 F.2d at 737. These factors are "illustrative, not mandatory." *Amgen, Inc. v. Chugai Pharm. Co.*, 927 F.2d 1200, 1213 (Fed. Cir. 1991). Note that it is not necessary that the patent specification teach what is well-known in the art. *See Hybritech Inc. v. Monoclonal Antibodies, Inc.*, 802 F.2d 1367, 1384 (Fed. Cir. 1986).

A broad claim construction can result in invalidity due to lack of enablement. When two embodiments are "distinctly different," each must be separately enabled. *See Auto. Tech. Int'l v. BMW*, 501 F.3d 1274 (Fed. Cir. 2007) (comparing two columns and five figures of specification for a mechanical sensor with one short paragraph and one figure for an electronic sensor, with uncontradicted expert testimony indicating undue experimentation was required to enable the electronic sensor).

Furthermore, courts have interpreted the "how to use" prong of § 112 as incorporating the utility requirement of § 101. *Rasmusson v. Smithkline Beecham Corp.*, 413 F.3d 1318, 1322-23 (Fed. Cir. 2005). Accordingly, an applicant's failure to disclose how to use an invention may be rejected under either § 112 for a lack of enablement or § 101 for lack of utility. *Id.* at 1323.

11.3.3.3 Best Mode

The best mode requirement of § 112, ¶ 1 demands that the specification set forth "the best mode contemplated by the inventor of carrying out his invention." This requirement restrains inventors from applying for patents while concealing known preferred embodiments of their inventions from the public. *See Teleflex, Inc. v. Ficosa N. Am. Corp.*, 299 F.3d 1313, 1330 (Fed. Cir. 2002). The Federal Circuit has interpreted best mode to require "an inventor to disclose the best mode contemplated by him, as of the time he executes the application, of carrying out the invention" defined by the claims. *See Bayer AG v. Schein Pharms., Inc.*, 301 F.3d 1306, 1314-15 (Fed. Cir. 2002) (quoting *In re Gay*, 309 F.2d 769, 772 (C.C.P.A. 1962)).

Compliance with the best mode requirement is a question of fact. *Bayer AG v. Schein Pharms., Inc.*, 301 F.3d 1306, 1312 (Fed. Cir. 2002). The test for compliance involves a two-prong inquiry: (1) did the inventor possess a best mode for practicing the invention at the time of filing the application; and (2) if the inventor possessed a best mode, is his disclosure adequate to enable a person having ordinary skill in the art to practice the best mode of the invention. *See Chemcast Corp. v. Arco Indus. Corp.*, 913 F.2d 923, 927-28 (Fed. Cir. 1990). While the first pfor instancerong is subjective and examines the inventor's state of mind at the

time of filing, the second prong is objective and focuses on the scope of the claimed invention and the level of skill in the art. *Eli Lilly & Co. v. Barr Labs., Inc.*, 251 F.3d 955, 963 (Fed. Cir. 2001). The *Bayer* court concluded that best mode violations are found where there is either a "failure to disclose a preferred embodiment, or else failure to disclose a preference that materially affected making or using the invention." *Id.* at 1316.

An inventor is typically not required to update the best mode disclosure based on findings made subsequent to the filing date, even if her patent application is still pending. Regarding continuation applications, the inventor need not update the best mode disclosure if the material in a continuation application is "common subject matter" with that of the original application. *See Transco v. Performance Contracting, Inc.*, 38 F.3d 551 (Fed. Cir. 1994). An inventor need only update the best mode in a continuation application if the claim feature associated with that best mode first appeared or first received adequate written description in that later filing.

11.3.3.4 Claim Definiteness

Section 112, ¶ 2, provides that "[t]he specification shall conclude with one or more claims particularly pointing out and distinctly claiming the subject matter which the applicant regards as his invention." This requirement ensures that the patentee adequately notify the public of the scope of her invention. *Datamize, LLC v. Plumtree Software, Inc.*, 417 F.3d 1342, 1347 (Fed. Cir. 2005) (holding the term "aesthetically pleasing" to be indefinite). Whether a claim satisfies the definiteness requirement is a question of law. *See Glaxo Group Ltd. v. Apotex, Inc.*, 376 F.3d 1339, 1345 (Fed. Cir. 2004).

The claim definiteness requirement is satisfied when a person skilled in the art "would understand the bounds of the claim when read in light of the specification . . . [and] reasonably apprise those skilled in the art of the scope of the invention." *Solomon v. Kimberly-Clark Co.*, 216 F.3d 1372, 1378 (Fed. Cir. 2000) (quoting *Personalized Media Commc'ns, LLC v. Int'l Trade Comm'n*, 161 F.3d 696, 705 (Fed. Cir. 1998)). Definiteness of claims does not demand "absolute clarity." *Datamize*, 417 F.3d at 1347. Only those claims that are "not amenable to construction" or "insolubly ambiguous" are indefinite. *Id.* The fact that the claim element contains words of degree such as "substantially," "about," or "closely approximate" does not necessarily render the claim indefinite. *See Verve LLC v. Crane Cams, Inc.*, 311 F.3d 1116, 1120 (Fed. Cir. 2002).

11.3.4 Novelty and Statutory Bars (§ 102)

Section 102 sets forth two sets of novelty requirements for a patent to issue: (1) that the inventor was the first to invent (reflected in subsections 102(a), (e),

(f), and (g)); and (2) that the inventor filed their application in a timely manner (reflected in subsections (b) (statutory bars), (c), and (d)).

The first set of requirements seeks to ensure that a patent issues only to the first inventor. The goal of rewarding only the first to invent uses the applicant's *date of invention* as the relevant baseline for analysis. Prior art containing all elements of the claimed invention that became publicly available (or filed as part of a patent application or known, but not abandoned, suppressed, or concealed) will anticipate, and thereby defeat, the patent claim. By contrast, the statutory bars and related timely filing provisions promote prompt disclosure by requiring that the patentee file an application within one year of various triggering events.

Whether a reference anticipates the applicant's invention is a question of fact. *See Elan Pharms., Inc. v. Mayo Found. for Med. Educ. and Research*, 346 F.3d 1051, 1054 (Fed. Cir. 2003). A finding of anticipation requires the reference to contain each and every limitation of the claimed invention[11] either expressly or inherently.[12] If even one limitation of the claimed invention is missing from the prior art reference, § 102 does not invalidate the claim—although the claim may still be vulnerable under the nonobviousness requirement. *See* § 11.3.5.2.

If a single reference discloses a species of a claimed genus, a claim to the entire genus is anticipated. *See Eli Lilly & Co. v. Barr Labs., Inc.*, 222 F.3d 973, 987 (Fed. Cir. 2000); *Titanium Metals Corp. v. Banner*, 778 F.2d 775 (Fed. Cir. 1985). The opposite is not always true; the disclosure of a genus in a single prior art reference does not necessarily anticipate a claimed species that is a member of that genus. *See Atofina v. Great Lakes Chem. Co.*, 441 F.3d 991, 999 (Fed. Cir. 2006).

---

11. A finding of anticipation requires that a prior art reference enable a person having ordinary skill in the art to make or use the claimed invention. *See Impax Labs., Inc. v. Aventis Pharms. Inc.*, 468 F.3d 1366 (Fed. Cir. 2006). This "enablement" standard is not as strict as that applied under § 112. Unlike that enablement requirement, an enabling reference under § 102 need not disclose utility, only the claimed invention's limitations. *Id.*

12. A claim is anticipated if each element of the claim is found, either expressly or inherently, in a single prior art reference. *See Verdegaal Bros., Inc. v. Union Oil Co. of Cal.*, 814 F.2d 628, 631 (Fed. Cir. 1987). There are, however, several exceptions to the inherency doctrine. In *Tilghman v. Proctor*, 102 U.S. 707 (1880), the Supreme Court declined to invalidate a patent based on a prior art machine (a steam engine) that might have accidentally and unwittingly produced a claimed fatty acid that proved useful as a cleansing substance. Nor does mere probabilistic inherency, *see Continental Can Co. USA v. Monsanto Co.*, 948 F.2d 1264, 1269 (Fed. Cir. 1991), nor the presence of an unrecognized *de minimis* quantity of a claimed substance in the prior art, *see In re Seaborg*, 328 F.2d 996 (CCPA 1964), anticipate later patent applications. *See also Eibel Process Co. v. Minn. & Ontario Paper Co.*, 261 U.S. 45 (1923). The Federal Circuit has, however, interpreted these exceptions and qualifications to the inherency rule narrowly. *See Schering Corp. v. Geneva Pharms., Inc.*, 339 F.3d 1373, 1377 (Fed. Cir. 2003) (observing that "[c]ases dealing with 'accidental, unwitting, and unappreciated' anticipation . . . do not show that inherency requires recognition.").

11.3.4.1 First to Invent—§ 102(a)

Section 102(a) precludes patentability where the "invention was known or used by others in this country, or patented or described in a printed publication in this or a foreign country," before the applicant's date of invention. Note the geographic limitations on the prior art covered by § 102(a): whereas knowledge or use must occur in the United States to bar patentability, a patent or printed publication from anywhere in the world can invalidate a patent. The courts have developed nuanced interpretations of § 102(a), particularly the phrases "known or used" and "printed publication."

11.3.4.1.1 "Known or Used"

Knowledge or use must have been available to the public to qualify as prior art under § 102. *See Woodland Trust v. Flowertree Nursery, Inc.*, 148 F.3d 1368, 1370 (Fed. Cir. 1998). Courts generally balance several factors—the number and credibility of observers, the intent of the discloser (did the inventor seek to keep the information secret?), the number of disclosures, and the extent to which the observers understood the invention—in determining whether a disclosure or use was "public." The evidence that knowledge or use was public is judged by the clear and convincing standard. In addition, "[t]he nonsecret use of a claimed process in the usual course of producing articles for commercial purposes is a public use." *W.L. Gore & Assocs., Inc. v. Garlock, Inc.*, 721 F.2d 1540, 1548 (Fed. Cir. 1983). Secret knowledge or use (including classified government research and articles under submission to journals) does not qualify for purposes of § 102(a). The effective date of a knowledge or use reference is the day on which it was presented to the public. Because it is aimed at determining whether anyone preempted the patentee, § 102(a) does not treat knowledge or use by the applicant herself as a reference; it only refers to knowledge or use by others.

11.3.4.1.2 Printed Publication

A printed publication has been interpreted to mean a reference that is "sufficiently accessible to the public interested in the art." *See Constant v. Advanced Micro-Devices, Inc.*, 848 F.2d 1560, 1568 (Fed. Cir. 1988). Accordingly, dissemination and public accessibility are the determinative factors regarding whether a reference is "published." "Accessibility goes to the issue of whether interested members of the relevant public could obtain the information if they wanted to. If accessibility is proved, there is no requirement to show that particular members of the public actually received the information." *Id.* at 1569. Whether a reference qualifies as a printed publication under § 102 is a question of law based on under-

lying factual determinations. *See Cooper Cameron Corp. v. Kvaerner Oilfield Prods., Inc.*, 291 F.3d 1317, 1321 (Fed. Cir. 2002).

The Federal Circuit has construed sufficient accessibility broadly, finding a single thesis cataloged (by subject matter) in a German university library accessible to those interested in the art exercising reasonable diligence constituted "sufficient accessibility" to bar patentability under § 102(b). *In re Hall*, 781 F.2d 897, 900 (Fed. Cir. 1986). Even a temporarily displayed reference that was neither distributed nor indexed may be sufficiently accessible to constitute a printed publication. *See In re Klopfenstein*, 380 F.3d 1345, 1350 (Fed. Cir. 2004). Relevant factors to analyze include:

(1) the length of time the display was exhibited,
(2) the expertise of the target audience,
(3) the existence (or lack thereof) of reasonable expectations that the material displayed would not be copied, and
(4) the simplicity or ease with which the material displayed could have been copied.

Id. Whether "printed publication" encompasses new technologies such as websites remains to be conclusively decided, but the Federal Circuit has noted that the phrase "has been interpreted to give effect to ongoing advances in the technologies of data storage, retrieval, and dissemination." *In re Hall*, 781 F.2d at 898.

11.3.4.2 Novelty—First to Invent—§ 102(g)

Section 102(g) addresses situations where two or more researchers independently discover the same invention, with the goal of granting a patent only to the first person to "invent" who does not abandon, suppress, or conceal the invention from the public. The somewhat opaque statutory provision provides that a patent shall issue unless:

> (1) during the course of an interference conducted under section 135 or section 291, another inventor involved therein establishes, to the extent permitted in section 104, that before such person's invention thereof the invention was made by such other inventor and not abandoned, suppressed, or concealed, or (2) before such person's invention thereof, the invention was made in this country by another inventor who had not abandoned, suppressed, or concealed it. In determining priority of invention under this subsection, there shall be considered not only the respective dates of conception and reduction to practice of the invention, but also the reasonable diligence of one who was first to conceive and last to reduce to practice, from a time prior to conception by the other.

The following schematic representation of § 102(g) shows how courts interpret this language:

(1) during the course of an interference conducted under section 135 or section 291, another inventor involved therein establishes, to the extent permitted in section 104, that
   a. before such person's invention thereof the invention was
   b. made by such other inventor and
   c. not abandoned, suppressed, or concealed, or
(2) [in the context of an invalidity defense to patent infringement]
   a. before such person's invention thereof, the invention was
   b. made in this country by another inventor who
   c. had not abandoned, suppressed, or concealed it.
(3) In determining priority of invention [under either branch] of this subsection, there shall be considered not only
   a. the respective dates of conception and reduction to practice of the invention, but also
   b. the reasonable diligence of one who was first to conceive and last to reduce to practice, from a time prior to conception by the other.

Subsection (1) deals with *interferences*, proceedings ordinarily conducted within the Patent Office (and only rarely in federal district court) when multiple inventors simultaneously claim the same invention. Subsection (2) is the more relevant provision for district courts. Defendants in infringement proceedings typically scour the field of technology to identify evidence that someone other than the patentee invented the claimed invention prior to the patentee's date of invention. Such evidence invalidates the issued patent claim if the invention was made in the United States before the patentee's date of invention and the first inventor did not abandon, suppress, or conceal the invention.

To make these principles operational, we need precise definitions of the following terms: (i) conception; (ii) reduction to practice; (iii) "reasonable diligence;" and (iv) "abandoned, suppressed, or concealed."

11.3.4.2.1 Conception

A conception of the claimed invention is "the complete performance of the mental part of the inventive art," a "definite and permanent idea of the complete and operative invention." *See Townsend v. Smith*, 36 F.2d 292 (CCPA 1929). It represents the idea of the invention, and does not require tests, models, or prototypes. Nonetheless, it must contain all limitations of the claimed invention as it is thereafter reduced to practice. To deter fraud, the law requires *corroboration* of any inventor testimony regarding conception, reduction to practice, or diligence. *See Mahurkar v. C.R. Bard Inc.*, 79 F.3d 1572, 1577-78 (Fed. Cir. 1996). Often this corroborating evidence takes the form of contemporaneous witnessed notebooks or records by someone skilled in the art. *See*, e.g., *Hahn v. Wong*, 892 F.2d 1028, 1032-33 (Fed. Cir. 1989). Without some form of corroborating evidence, an in-

ventor's testimony is ignored. While before the Patent Office, an inventor may file a Rule 131 affidavit, *see* 37 C.F.R. § 1.131, to establish a date of invention. The patentee must corroborate this date.

11.3.4.2.2 Reduction to Practice

A reduction to practice can be actual or constructive. A prototype or working embodiment of the claimed invention that is "suitable for [the invention's] intended purpose" serves as an actual reduction to practice. *See Mahurkar v. C.R. Bard Inc.*, 79 F.3d 1572, 1578 (Fed. Cir. 1996). Proving that a prototype was "suitable for its intended purpose" will vary, depending on the complexity of the invention. A simple mechanical device may require only a drawing, while a chemical invention may require extensive experimental data. Patent law recognizes a patent application as a constructive reduction to practice provided it describes and enables a person of ordinary skill in the art to practice the invention without undue experimentation.

11.3.4.2.3 Reasonable Diligence

"Reasonable diligence" is only at issue when the inventor was first to conceive but second to reduce to practice. In this specific context, the first-to-conceive inventor must have been reasonably diligent in working to reduce the invention to practice between the time "just prior" to the later inventor's date of conception until the first-to-conceive inventor's reduction to practice. *See*, e.g., *Griffith v. Kanamaru*, 816 F.2d 624 (Fed. Cir. 1987). Once the first-to-conceive has reduced to practice, their further diligence is no longer relevant, although they must not abandon the invention through undue delay in filing a patent application. *See* § 11.3.4.2.4.

Whether an inventor was reasonably diligent is a case-by-case determination, but prior cases establish some guideposts. *Griffith* held that a delay of three months after conception before embarking on efforts to reduce the invention to practice while waiting for additional funding and the arrival of a graduate student was not reasonable. Other factors to consider include the complexity of the invention, the need for other experiments, work on similar inventions, and the inventor's health.

11.3.4.2.4 Abandoned, Suppressed, or Concealed

Section 102(g) nullifies evidence of prior invention if such earlier inventor abandoned, suppressed, or concealed the invention. Whether an invention has been abandoned, suppressed, or concealed is a question of intent, but an unreasonably long delay in filing for a patent creates an inference that the inventor intended to suppress the invention. *See Dow Chem. Comp. v. Astro-Valcour, Inc.*,

267 F.3d 1334 (Fed. Cir. 2001) (a two-and-a-half-year delay did not); *Peeler v. Miller*, 535 F.2d 647 (CCPA 1976) (a four-year delay in applying for a patent destroyed priority). While § 102(g) prevents an inventor from claiming an early priority date on an invention she later suppressed, it does not prevent an inventor from claiming a later date when she resumes work on the invention. In such cases, the earlier, suppressed work is ignored and the inventor can rely on the resumed work to establish new dates of conception and reduction to practice. *See Paulik v. Rizkalla*, 760 F.2d 1270 (Fed Cir. 1985) (en banc).

By invalidating a claimed invention because of a prior invention that might not have been publicly disclosed, section 102(g) cuts against the principle that novelty is judged on the basis of public knowledge. The invention priority rule of § 102(g) seeks to balance that principle with the "first to invent" principle. The requirement that prior invention not have been "abandoned, suppressed, or concealed" provides the fulcrum for effectuating this balance.

11.3.4.2.5 Section 102(g)—Summary

The 102(g) invention priority rule can usefully be restated as follows:

(1) The first to reduce the invention to practice has priority by default.

(2) Filing a valid patent application is a constructive reduction to practice.

(3) The second person to reduce to practice can prevail only if they were the first to conceive and were diligent from a time prior to the other inventor's conception through to their own reduction to practice.

(4) Any reduction to practice that was abandoned, suppressed, or concealed cannot defeat patentability by another.

11.3.4.3 Novelty—"Secret Prior Art"—§ 102(e)

The possibility of secret prior art invalidating a patent also arises under § 102(e) whereby confidential patent applications within the Patent Office can be used to invalidate later filings.[13] If a patent application discloses (although does not claim) a later filed claimed invention and is later published, the application constitutes § 102(e)(1) prior art as of its filing date.[14] If the application later issues as a patent, such application constitutes § 102(e)(2) prior art as of its filing date. The

13. A patent is considered "secret prior art" when its contents cannot become known until the date of publication or issuance, even though its effective date is the filing date. *Sun Studs, Inc. v. ATA Equip. Leasing, Inc.*, 872 F.2d 978, 982 n.3 (Fed. Cir. 1989).

14. If the pending application *claims* (and not merely discloses) the same invention, then it constitutes § 102(g) prior art and will provoke an interference if such conflict is recognized by an examiner.

policy rationale behind § 102(e) is that if another's earlier filed patent application describes the applicant's claimed invention, the applicant was not the first inventor of that subject matter. The fact that the knowledge was not publicly known is outweighed by the Patent Office's knowledge of the invention and its unique role in making patent determinations.

11.3.4.4 Novelty—Derivation—§ 102(f)

Section 102(f) precludes an applicant from obtaining a patent on inventions that he did not invent. This section is referred to as the "derivation" provision, meaning that an applicant may not patent subject matter derived from another. *See OddzOn Prods, Inc. v. Just Toys, Inc.*, 122 F.3d 1396, 1401 (Fed. Cir. 1997). Section 102(f) is not limited to public knowledge but may also concern private communications between the applicant and another. *Id.* at 1401-02. Proof that another derived the invention requires showing both prior conception of the invention and disclosure of that conception to the applicant. See *Gambro Lundia AB v. Baxter Healthcare Corp.*, 110 F.3d 1573, 1576 (Fed. Cir. 1997). Because there are no geographic limitations in § 102(f), prior conception and disclosure to the applicant can occur anywhere in the world.

11.3.4.5 Statutory Bars—Timely Filing—§ 102(b)

Section 102(b) arises frequently in patent litigation. The provision encourages timely filing of patent applications to more quickly expand the public's knowledge and prevent inventors from extending the effective life of their patent through delay in filing for protection. Section 102(b) states that a person shall be entitled to a patent unless

the invention was patented or described in a printed publication in this or a foreign country or in public use or on sale in this country, more than one year prior to the date of the application for patent in the United States.

The section recognizes three types of prior art: "printed publication," "public use," and offers for sale. Printed publications can come from anywhere in the world. The second and third categories of reference, public use or offers for sale, only invalidate the claimed invention if they occur in the U.S. The second salient feature of this provision is the *critical date*: one year prior to the date of the application. Any reference before the critical date—whether originating from the inventor or a third party—invalidates the patent claims that "read on" the reference. Each of these concepts has generated substantial jurisprudence. "Printed publication" and "public use" were discussed above with respect to § 102(a), *see* § 11.3.4.1.1, and their meanings are the same under § 102(b). "On sale" is unique to § 102(b).

11.3.4.5.1 Experimental Use

To accommodate circumstances in which inventors need to experiment in publicly accessible areas in making certain types of inventions, courts developed an "experimental use" exception to § 102(b)'s "public use" bar. *See City of Elizabeth v. Am. Nicholson Pavement Co.*, 97 U.S. 126 (1877).[15] The determination of whether an otherwise public use is experimental depends on balancing the following circumstances: "the number of prototypes and duration of testing, whether records or progress reports were made concerning the testing, the existence of a secrecy agreement between the patentee and the party performing the testing, whether the patentee received compensation for the use of the invention, and the extent of control the inventor maintained over the testing." *Lough v. Brunswick Corp.*, 86 F.3d 1113, 1120-21 (Fed. Cir. 1996). Of these factors, the Federal Circuit has emphasized the degree of control the inventor maintained because if it is absent, the inventor "is not experimenting." Any experimentation must be in regard to establishing that the claimed invention works for its intended purpose, and not, for example, for refining a product to improve marketability. *See In re Smith*, 714 F.2d 1127 (Fed. Cir. 1983). Once reduction to practice is achieved, the experimental use exception ends and § 102(b)'s one-year grace period begins to run.

11.3.4.5.2 On Sale Bar

Section 102(b)'s "on-sale bar" can be triggered by behavior that also runs afoul of "public use" bar, in which case both provisions invalidate the claim. The more difficult and contentious cases involve offers or sales that do not occur in public. Such information is typically revealed through pretrial discovery.

The on-sale bar can be strict in its application. A single offer to sell technology can invalidate the patent, and it can be made by anyone, even a third party unknown to the patentee. *See*, e.g., *Abbott Labs. v. Geneva Pharms.*, 182 F.3d 1315 (Fed. Cir. 1999). The invention does not even have to be built. The Supreme Court interpreted the on-sale bar to require only that the invention be "ready for patenting" when subject to a commercial offer for sale. *Pfaff v. Wells Elecs.*, 525 U.S. 55 (1998). An invention is "ready for patenting" if it has been actually reduced to practice by being physically constructed or if there are "drawings or other descriptions of the invention sufficiently detailed to enable a person skilled in the art to practice the invention." *Id.* at 67.

Some additional nuances in the jurisprudence favor the patentee. First, the statute states that the "invention" must be placed on sale. The courts have interpreted this to mean that the offer for sale must involve an embodiment of the in-

15. This type of "experimental use" applicable to § 102(b) is distinct from the "experimental use" defense to patent infringement. *See* § 11.4.2.2.2.

vention. Licensing activity does not trigger the on-sale bar so long as there is no embodiment of the invention at issue. Second, the invention must be subject to a genuine commercial offer for sale. A patentee does *not* violate the on-sale bar by distributing advertisements and data sheets to prospective buyers while fielding requests for samples from salesmen in the field because this behavior does not rise to the level of an "offer." *See*, e.g., *Linear Tech. Corp. v. Micrel Inc.*, 275 F.3d 1040 (Fed. Cir. 2001).[16] The Federal Circuit has incorporated the Uniform Commercial Code and "traditional contract law principles" to determine whether an offer is genuine for purposes of applying the on-sale bar. Third, an offer to sell must be between unrelated parties. Hence, offers between a parent and a subsidiary do not trigger the bar. *See Ferag AG v. Quipp Inc.*, 45 F.3d 1562 (Fed. Cir. 1995).

The on-sale bar is subject to a territorial restriction. Only if the claimed invention is "on sale in this country" is the patent claim invalid. Determining whether an invention is "on sale in this country" can be difficult in the rapidly globalizing economy. As with deciding whether an offer was made, courts look to "traditional contract law principles" to determine the locus of an offer.

11.3.4.6 Statutory Bars—Abandonment—§ 102(c)

Under § 102(c), an applicant is entitled to a patent unless she "has abandoned the invention."[17] This section is a loss-of-right provision. *See OddzOn Prods, Inc. v. Just Toys, Inc.*, 122 F.3d 1396, 1402 (Fed. Cir. 1997). It refers to an inventor's express dedication of her invention to the public through either deliberate surrender or conduct showing an intent not to pursue patent protection. Abandonment under § 102(c) occurs only based on actions by the inventor after she has made the invention but before she has filed the patent application. *See id.* at 1404.

11.3.4.7 Statutory Bars—International Filing—§ 102(d)

Under § 102(d), a patent may not issue where (1) the inventor filed a foreign patent application more than twelve months prior to filing the U.S. patent application, and (2) a patent issued from that foreign application prior to the U.S. filing date.[18] This provision encourages applicants to file their U.S. applications promptly after filing foreign applications. *See In re Kathawala*, 9 F.3d 942, 946 (Fed. Cir. 1993). Like § 102(c), violation of this provision results in the loss of

16. But note that a detailed advertisement can constitute a printed publication if it enables the invention.

17. Abandonment under § 102(c) and that under § 102(g) are separate concepts. While § 102(c) relates to abandonment of the right to receive a patent, § 102(g) refers to abandonment of the invention itself. *See* § 11.3.4.2.4.

18. Foreign patents of others can constitute prior art references under §§ 102(a) and 102(b).

right. *See OddzOn Prods, Inc. v. Just Toys, Inc.*, 122 F.3d 1396, 1402 (Fed. Cir. 1997). Due to the Patent Cooperation Treaty (PCT), which facilitates and coordinates international patent prosecutions, patent invalidations under § 102(d) rarely occur today.

Validity of the foreign claims is immaterial to the § 102(d) determination. What matters to the inquiry is that the foreign patent issued "with claims directed to the same invention as the U.S. application." *In re Kathawala*, 9 F.3d at 945.

11.3.5 Nonobviousness—§ 103

11.3.5.1 Historical Development

Some measure of inventiveness has been required to receive a patent since the seminal case of *Hotchkiss v. Greenwood*, 52 U.S. 248 (1850), where the Supreme Court held that the patent law's concept of "invention" required going beyond the skill or ingenuity of an "ordinary mechanic acquainted with the business." *Hotchkiss*, 52 U.S. at 267. Over the following century, the "invention" requirement grew more stringent, leading to the controversial "flash of creative genius" test from *Cuno Engineering Corp. v. Automatic Devices Corp.*, 314 U.S. 84, 91 (1941), and the "unusual or surprising consequences" test from *Great A & P Tea Co. v. Supermarket Equipment Corp.*, 340 U.S. 147 (1950). This high bar to patentability threatened to cripple the patent system, leading to the formal adoption of a lesser "nonobviousness" standard in the Patent Act of 1952.

11.3.5.2 Nonobviousness Standard

Section 103(a) states that:

> A patent may not be obtained though the invention is not identically disclosed or described as set forth in section 102 of this title, if the differences between the subject matter sought to be patented and the prior art are such that the subject matter as a whole would have been obvious at the time the invention was made to a person having ordinary skill in the art to which said subject matter pertains. Patentability shall not be negatived by the manner in which the invention was made.

The text provides some structure for the nonobviousness inquiry. Obviousness must be determined at the time of invention from the perspective of a person having ordinary skill in the art. As suggested by the last sentence, the manner of invention is irrelevant. An invention is eligible for patent protection whether accidental or nearly instantaneous so long as it meets the test set forth in the first sentence of § 103(a).

The Supreme Court framed nonobviousness analysis in the seminal case of *Graham v. John Deere Co. of Kansas City*, 383 U.S. 1 (1966), which required courts to make findings regarding the "scope and content of prior art," the "differences between the prior art and claims at issue," and the "level of ordinary skill in the pertinent art." *Graham*, 313 U.S. at 17. The Court also brought consideration of secondary factors—what might be deemed circumstantial evidence of inventiveness (such as long-felt need, failure of others, praise for the invention, and unexpected results)—into the determination of whether an invention was obvious at the time it was made. The Supreme Court recently reaffirmed the *Graham* framework and emphasized that the inquiry under § 103 is flexible, "broad" and open-ended. *KSR Int'l Co. v. Teleflex, Inc.*, 127 S. Ct. 1727 (2007). Each step of this analysis is discussed below.

11.3.5.3 Applying § 103

Courts generally assess nonobviousness by first ascertaining the person having ordinary skill in the art, then analyzing the pertinent prior art, and finally assessing the difference between the baseline of prior art and the claimed invention from the standpoint of a person having ordinary skill in the art as of the time the invention was made.

11.3.5.3.1 Determining the Level of Ordinary Skill in the Art

In determining the level of ordinary skill in the art, courts look to the inventor's educational level, the nature of the field's typical problems, the skill required to grapple with the prior solutions to the field's problems, the pace of innovation in the field, the sophistication of technology, and the educational level of people working in the field. *See Envtl. Designs, Ltd. v. Union Oil Co.*, 713 F.2d 693, 696 (Fed. Cir. 1983). In practice, the alleged infringer will argue that the level of ordinary skill is very high, making many inventions appear obvious. The patentee often suggests a very low level of ordinary skill in the art and puts on, as Chief Justice Roberts observed, "the least insightful person you can find . . . ." Transcript of Oral Argument at *49, *KSR Int'l v. Teleflex, Inc.*, 127 S. Ct. 1727 (No. 04-1350).

Some opinions make explicit determinations of the person of ordinary skill, as did the district court in *KSR* ("an undergraduate degree in mechanical engineering (or an equivalent amount of industry experience) [and] familiarity with pedal control systems for vehicles," *Teleflex Inc. v. KSR Int'l*, 298 F. Supp. 2d 581, 590 (E.D. Mich. 2003)), although it is not uncommon for courts to leave this determination somewhat vague. For example, in *Environmental Designs, Ltd. v. Union Oil Co.*, 713 F.2d 693 (Fed. Cir. 1983), the parties conceded that each side's experts were persons of ordinary skill in the art. Moreover, "a specific finding on the level of

skill in the art is not . . . required where the prior art itself reflects an appropriate level and a need for testimony is not shown." *Litton Indus. Prods., Inc. v. Solid State Sys, Corp.*, 755 F.2d 158, 163-64 (Fed. Cir. 1985). Chart 11.3 provides illustrative findings of the person of ordinary skill in the context of particular fields of invention:

Chart 11.3
Illustrative Findings of a Person Having Ordinary Skill

Case	Field of Invention	Person Having Ordinary Skill
Micro Motion, Inc. v. Exac Corp., 741 F. Supp. 1426 (N.D. Cal. 1990).	devices that measure the flow rate of fluids, for example, in a pipeline	"A design engineer with a college degree in mechanical engineering or the equivalent, and who had several years of experience in the design and development of flow measurement and control instruments."
Sud-Chemie, Inc. v. CSP Techs., Inc., 2006 U.S. Dist. LEXIS 54873 (S.D. Ind. 2006).	polymer blends with specific structural qualities	"A Ph.D.-level scientist [in the field of polymer chemistry]."
Imperial Chem. Indus., PLC v. Danbury Pharmacal, Inc., 777 F. Supp. 330 (D. Del. 1991).	method for treating patients suffering from hypertension	"A person of ordinary skill in the art would be an individual with a Ph.D. degree in organic chemistry, with an emphasis in medicinal chemistry and experience with the techniques of drug development in general and specific experience with the development of beta-blockers."
Eli Lilly & Co. v. Teva Pharms. USA, Inc., 2004 U.S. Dist. LEXIS 14724	method of treating patients suffering from premenstrual syndrome	"A hypothetical medical doctor (an OB/GYN, a family practice physician, or a psychiatrist) who: (1) regularly sees and treats patients suffering from PMS, and (2) is familiar with the relevant prior art."

Chart 11.3
Illustrative Findings of a Person Having Ordinary Skill, *continued*

Case	Field of Invention	Person Having Ordinary Skill
Rosen Enter. Sys., LP v. Icon Enters., Inc., 339 F. Supp. 2d 902 (C.D. Cal. 2005).	flip-down screens for cars	"The level of ordinary skill here is a technical knowledge of the design and installation of overhead flip-down display units for automobiles."
Windsurfing Int'l, Inc. v. Fred Ostermann GmbH, 613 F.Supp. 913 (S.D.N.Y. 1985), *aff'd in relevant part*, *Windsurfing Int'l, Inc. v. AMF, Inc.*, 782 F.2d 995 (Fed. Cir. 1996).	sails	"The hypothetical person of ordinary skill in the art of sailboat design in 1967 had either a combination of several years sailing experience and several years of practical experience designing and/or constructing sailboats or, alternatively, he possessed a college degree in design or engineering as well as a general knowledge of sailing."

11.3.5.3.2 Scope and Content of the Prior Art

Because § 103 does not expressly define what constitutes "prior art," courts have looked to § 102 for the classes of references that can qualify as "prior art" references for the § 103 inquiry. Any reference that could be a reference under §§ 102(a), (b), (e), (f), or (g) can qualify as a reference for § 103. *See OddzOn Prods., Inc. v. Just Toys, Inc.*, 122 F.3d 1396 (Fed. Cir. 1997). Notwithstanding the test of § 103, which measures obviousness as of the time of invention, § 102(b) references can also apply in making § 103 obviousness determinations, even though they are effective as of one year prior to the application filing date (and hence may postdate the time of invention). *See OddzOn Products*, 122 F.3d at 1402; *In re Foster*, 343 F.2d 980 (CCPA 1965); Donald S. Chisum, 2 Chisum on Patents § 5.03[2][b]. To prevent companies from having one group of employees' non-public research used as prior art against other employees' inventions, § 103(c) excludes consideration of §§ 102(e), (f), and/or (g) references if it comes from the inventor, her firm, or someone with an assignment obligation to the patenting enterprise.

A § 103 reference must also come from an "analogous art" to satisfy the presumption that a person having ordinary skill in the art would be familiar with it. Courts base this determination upon whether the reference is "from the same field of endeavor, regardless of the problem addressed," and if not, whether the refer-

ence is "reasonably pertinent to the particular problem with which the inventor is involved." *See In re Clay*, 966 F.2d 656 (Fed. Cir. 1992); *see also In re Paulsen*, 30 F.3d 1475 (Fed. Cir. 1994). A prior art reference qualifies as analogous art if it satisfies *either* inquiry. Chart 11.4 illustrates this mode of analysis:

Chart 11.4
Assessing Whether Prior Art is Analogous

Case	Field of invention	Reference	Same field?	Same problem?
AstraZeneca Pharms., LP v. Maybe Pharama (USA) Inc., 2005 U.S. Dist. LEXIS 26196 (S.D.N.Y. 2005).	Pharmaceutical formulation	Patent related to sludge formation in fuel	No	No
Festo Corp. v. Shoketsu Kinzoku Kogyo Kabushiki Co., Ltd., 2005 U.S. Dist. LEXIS 11621 (D. Mass. 2005).	Sealing rings for large magnetic devices	Sealing rings for small magnetic devices	Yes	Yes

11.3.5.3.3 Differences Between Invention and Prior Art

Once the level of ordinary skill in the art and the applicable prior art have been identified, the trier of fact assesses the differences between the claimed invention and the prior art.

11.3.5.3.4 Secondary Considerations

Given the metaphysical quality of the obviousness determination, the Supreme Court in *Graham* suggested a number of secondary considerations—forms of circumstantial evidence—that might shed light on whether an invention was obvious at the time it was made. As the Court reaffirmed in *KSR*, the list of secondary considerations is not exclusive; a court may look to "any secondary considerations that would prove instructive" as to whether an invention was obvious. *KSR*, 127 S. Ct. at 1739. Secondary considerations provide a reality check as well as corroborating evidence that a particular technical advance warrants patent protection. The Federal Circuit requires that there be a nexus between the proffered secondary consideration and the claimed invention. The Federal Circuit *requires* district courts to make findings regarding secondary considerations. *See Custom Accessories, Inc. v. Jeffrey-Allen Indus., Inc.*, 807 F.2d 955 (Fed. Cir. 1986). Below are the most widely cited secondary considerations:

11.3.5.3.4.1 Long-Felt Need and Failure by Others

The *Graham* Court suggested that a claimed invention that solves a "long-felt need" within an industry would likely be nonobvious. Evidence that many others within the field have tried and failed to make the claimed invention suggests that the claimed invention was not obvious to a person of ordinary skill in the art. For example, in *Texas Instruments, Inc. v. U.S. Int'l Trade Comm'n*, 988 F.2d 1165, 1178 (Fed. Cir. 1993), the evidence showed that the semiconductor industry had attempted but failed to package semiconductors in plastic for over six years prior to the invention. The patentee's invention solved the problem of damaged components by insulating semiconductors in plastic. The Federal Circuit therefore held that the patent was valid.

In evaluating evidence of failure by others, however, courts should hew to the person having ordinary skill in the art and not slip to the level of skill of the failures.

11.3.5.3.4.2 Awards and Praise

Awards or praise for an invention suggest that it represents a significant advance. For example, in *W.L. Gore & Associates, Inc. v. Garlock, Inc.*, 721 F.2d 1540 (Fed. Cir. 1983), various people in the community called the invention of Gore-Tex "magical" and "a remarkable new material," which the Federal Circuit credited along with other secondary indicia (commercial success, long-felt need) to find the invention nonobvious. The court must be careful, however, in analyzing patents that are a component of a larger system that garners praise. A patentee may claim a software process and proffer that its new software program received many awards, but the only awards that are relevant for § 103 are those relating to the patented components of the software.

11.3.5.3.4.3 Skepticism, "Teaching Away," and Unexpected Results

If the field's literature suggested prior to the time of the invention that the claimed solution was impossible, that suggests that the invention was nonobvious. *See*, e.g., *United States v. Adams*, 383 U.S. 39, 51-52 (1966). In *Adams*, the prior art discouraged experimenting with the combination that led to the patented invention as risky and unlikely to be successful.[19] The Court relied on this background evidence to find that a person having ordinary skill in the art at the time of the invention would have found it nonobvious. The record in *Adams* also

19. This discouragement is referred to as "teaching away" from the invention.

showed that many experts disbelieved Adams' results, only to later apply for patents on improvements on Adams' invention.

Unexpected results that contradict long-held industry assumptions or beliefs can also demonstrate that the claimed invention was nonobvious at the time it was made. In *American Hoist & Derrick Co. v. Sowa & Sons*, 725 F.2d 1350 (Fed. Cir. 1984), the patentee shattered industry beliefs by demonstrating that a thin coating of chemicals could produce stronger safety glass than a thick coating.

11.3.5.3.4.4 Licensing Activity

Extensive licensing also suggests that industry actors consider the patented invention nonobvious. *See*, e.g., *Eibel Process Co. v. Minn. & Ont. Paper Co.*, 261 U.S. 45, 53-56 (1923). The reasoning goes that people in the industry would not be willing to license an obvious invention. Again, the nexus requirement to support this conclusion is critical. Patent holders routinely cross-license entire portfolios of patents without considering individual claims. In those situations, it is not credible to suggest industry actors agreed a claim was valid and nonobvious because they licensed it. Instead, a court should examine, as in *Eibel Process*, whether the licensees have chosen to specifically license and use the claimed invention.

11.3.5.3.4.5 Copying

Courts can infer that an invention is nonobvious if others copy the invention. *See*, e.g., *Diamond Rubber Co. v. Consol. Rubber Tire Co.*, 220 U.S. 428, 440-41 (1911). Courts should be careful in evaluating this factor, however, since many infringement cases will involve an alleged infringer who "copied" the invention. Some alleged infringers may copy the invention believing that the patent is invalid because it is obvious; the mere fact that they copied should not defeat alternative arguments of obviousness. The Court in *Diamond Rubber* was impressed that in a field crowded with prior art and with many other possible tire designs, the alleged infringers chose to adopt the patentee's design over all others.

11.3.5.3.4.6 Commercial Success

If a claimed invention performs well in the marketplace because of its patented features, the invention may be nonobvious. *See*, e.g., *Hybritech, Inc. v. Monoclonal Antibodies, Inc.*, 802 F.2d 1367 (Fed. Cir. 1986). When looking at commercial success as an indication of nonobviousness, courts should carefully assess the nexus between the success and the patent claim. This is particularly important when the patented technology is but one component in a larger system. Consider a patented air bag that an automaker installs on all of its new vehicles. The automaker cannot point to its overall car sales as evidence of nonobviousness un-

less it can show that the improved airbag is a key factor in car sales. It is likely, however, that consumers are basing their purchasing decisions on a wide variety of factors, such as engine performance, fuel economy, and body design. If, on the other hand, the automaker can demonstrate that safety-conscious buyers bought its cars in large numbers because of the new airbag technology, that evidence would favor a finding that the claimed invention is nonobvious.

11.3.5.3.5 The Ultimate Conclusion and Combining References

With these factual predicates—the level of ordinary skill in the art, the analogous prior art, the differences between the invention and the prior art, and the pertinent secondary considerations—the court then determines as a question of law whether the claimed invention as a whole would have been obvious to a person having of ordinary skill in the art as of the time of the invention. *KSR Int'l Co. v. Teleflex, Inc.*, 127 S. Ct. 1727 (2007); *Graham*, 383 U.S. at 17-18; *Pharmastem Thereapeutics, Inc. v. Viacell, Inc.*, 491 F.3d 1342 (Fed. Cir. 2007); *see generally* § 7.3.4.4. The person having ordinary skill in the art is presumed to know all analogous prior art.

Many cases raising nonobviousness will involve a claimed invention that is a combination of pre-existing elements or components. Where all of the limitations were known in the prior art, the question becomes whether it was obvious for a person having ordinary skill in the art to combine those features to address a known problem. Prior to *KSR*, the Federal Circuit applied a doctrine referred to as the "teaching, suggestion, or motivation" or "TSM" test which required evidence of an explicit cross-reference linking the preexisting restrictions from disparate references *and* that a person having ordinary skill in the art would not have to engage in undue experimentation to create the combination. The *KSR* Court rejected this "rigid formulation." Instead, the Court suggested that in many fields "market demand" compels an inventor to combine references. *KSR*, 127 S. Ct. at 1740-42. The *KSR* Court counsels that the nonobviousness inquiry cannot be reduced to a single inquiry. Instead, the inquiry is expansive, flexible, and functional. For example, the Court suggested that, "[o]ne of the ways in which a patent's subject matter can be proved obvious is by noting that there existed at the time of invention a known problem for which there was an obvious solution encompassed by the patent's claims." *Id.* at 1742.

Thus, district courts should remain open to various ways of determining that a person having ordinary skill in the art would have found the claimed invention obvious in light of the prior art. An explicit teaching, suggestion, or motivation continues to be a valid test for defeating nonobviousness. The Supreme Court also suggested that recent Federal Circuit cases finding "common knowledge" of those

of skill in the art and "*implicit* motivations" to combine references sufficient to find that a claimed invention is obvious. *Id.* at 1742-43.

Since *KSR*, the Federal Circuit has held that merely replacing known mechanical components of an invention with electronic parts is likely to be obvious. *See Leapfrog Enters., Inc. v. Fisher-Price, Inc.*, 485 F.3d 1157 (Fed. Cir. 2007). Often, advances in collateral technologies—such as advances in digital technology or the development of the Internet—or the emergence of market demand (as occurred in *KSR*) will enable persons having ordinary skill in the art to apply known technologies or skills in new but obvious ways that have tremendous value. Section 103 bars patents on such techniques.

11.3.6 Inventorship

The Patent Act requires that the patent application list all of the inventors. This section discusses who qualifies as an "inventor," the legal effect of that determination, and how the question arises in litigation.

11.3.6.1 Inventive Entities

Section 116 requires each inventor to apply jointly for a patent on their invention. The statute does not define inventor. Instead, it suggests that multiple people can be joint inventors even if (1) they did not work together in the same space or at the same time, (2) they made unequal contributions to the invention, or (3) they did not contribute to all of the claims of the patent.

For a person to be a joint inventor, they have to contribute to the "conception" of the invention. Testing the invention to make sure it works is not sufficient. *See Burroughs Wellcome Co. v. Barr Labs., Inc.*, 40 F.3d 1223 (Fed. Cir. 1994). Although § 116 does not require that all co-inventors work at the same time or in the same place, there must be some collaborative effort. *See Kimberly-Clark Corp. v. Proctor & Gamble Distrib. Co.*, 973 F.2d 911 (Fed. Cir. 1992).

An "inventive entity" is the group of inventors behind any given patent. An inventive entity can be a lone inventor A, or it can be a group, e.g., A, B, and C. The inventive entity in these two situations is different, despite sharing an inventor. The significance of this difference requires understanding the various statutory rules governing patent validity. Some rules, like § 102(a)'s novelty bar and § 103's nonobviousness requirement, only invalidate a claim based on prior art attributable to other inventive entities. This seems logical when the other inventive entity is a competitor or stranger, but note that the solo work of inventive entity A is distinct from the work of inventive entity A, B, and C. For an application of this principle, *see In re O'Farrell*, 853 F.2d 894 (Fed. Cir. 1988).

11.3.6.2 Default Rights of Owners

The question of inventorship often arises because inventors receive a potentially powerful and valuable set of rights in their patents. Each inventor is a co-owner of the patent and may freely grant non-exclusive licenses. Alleged infringers have exploited this technicality by searching for an unlisted co-inventor of *any* of the claims of the patent and obtaining a license from them. *See*, e.g., *Ethicon, Inc. v. United States Surgical Corp.*, 135 F.3d 1456 (Fed. Cir. 1998). Additionally, each joint inventor may freely practice the invention without accounting to the other inventors. *See* § 262.

In general, companies avoid "rogue" inventor problems by obtaining assignment agreements from everyone they employ. The construction and validity of these assignment agreements depends on state contract law, introducing a choice of law wrinkle to patent litigation. Some research institutions are more lax in binding researchers and may not have comprehensive assignment agreements. Such contexts, like a university research setting or a collaborative industry meeting, can give rise to knotty inventorship disputes.

11.3.6.3 Correction of Inventorship

The district court can order corrections to address errors in inventorship. § 256. The Federal Circuit has interpreted this provision broadly, allowing for wide-ranging correction of inventorship. *See Stark v. Advanced Magnetics, Inc.*, 119 F.3d 1551 (Fed. Cir. 1997). The Federal Circuit was careful to note, however, that any "mistakes" in inventorship designed to avoid the problems created by misaligned inventive entities discussed above could support a finding of "inequitable conduct" and render the patent unenforceable.

11.4 Enforcement: Infringement, Defenses, and Remedies

The second major aspect of most patent litigations relates to the determination of whether infringement has or will occur. Unlike the validity determination—in which the alleged infringer bears the burden of proof (as a result of the presumption of validity)—the patentee bears the burden of proving infringement by a preponderance of the evidence. The alleged infringer then has the opportunity to assert a broad range of legal and equitable defenses. The final aspect of most patent litigations concerns remedies—injunctive relief, damages (including the possibility of enhanced damages), and attorney fees.

11.4.1 Infringement

11.4.1.1 Section 271

Section 271 defines patent liability to include both direct and indirect infringement. Direct infringement exists where an individual violates one of the exclusive rights granted to the patentee under § 271(a). Indirect infringement occurs where a person induces infringement under § 271(b) or contributes to infringement under § 271(c). In either case, the patent holder bears the burden of proving infringement by a preponderance of the evidence. *See Centricut, LLC v. Esab Group, Inc.*, 390 F.3d 1361, 1367 (Fed. Cir. 2004).

11.4.1.2 Direct Infringement

A person is liable for direct infringement if he "without authority makes, uses, offers to sell, or sells any patented invention, within the United States or imports into the United States any patented invention during the term of the patent therefore." § 271(a). An accused infringer's intent is immaterial, as patent infringement is a strict liability offense.

11.4.1.3 Indirect Infringement

Indirect infringement covers conduct by a person who assists or supports another's direct infringement of a patented invention. Direct infringement must be established as a predicate for each act of indirect infringement. *See Dynacore Holding Corp. v. U.S. Philips Corp.*, 363 F.3d 1263, 1272 (Fed. Cir. 2004) ("Indirect infringement . . . can only arise in the presence of direct infringement, though the direct infringer is typically someone other than the defendant accused of indirect infringement."). Both the direct infringer and indirect infringer are jointly and severally liable for the infringement.

The Patent Act recognizes both inducement (§ 271(b)) and contributory infringement (§ 271(c)). A third theory of indirect infringement—joint infringement—has also emerged in recent cases.

11.4.1.3.1 Inducement

Section 271(b) provides that "[w]hoever actively induces infringement of a patent shall be liable as an infringer." A finding of inducement requires that a patent owner establish evidence of culpable conduct directed toward encouraging another's infringement. *See DSU Medical Corp. v. JMS Co., Ltd.*, 471 F.3d 1293 (Fed. Cir. 2006) (en banc). The defendant must have "actively and *knowingly* aid[ed] and abet[ted] another's direct infringement." *Water Techs. Corp. v. Calto, Ltd.*, 850 F.2d 660, 668 (Fed. Cir. 1988) (emphasis in original) (noting that "[a]lthough

section 271(b) does not use the word 'knowing,' the case law and legislative history uniformly assert such a requirement"). Accordingly, the inducer must have actual or constructive knowledge of the patent. *See Insituform Techs., Inc. v. Cat Contracting, Inc.*, 161 F.3d 688, 695 (Fed. Cir. 1998). Inducement liability often arises from supplier/customer relationships.

11.4.1.3.2 Contributory Infringement

Section 271(c) imposes liability under the following circumstances:[18]

> [1] Whoever offers to sell or sells within the United States or imports into the United States a component of a patented machine, manufacture, combination or composition, or a material or apparatus for use in practicing a patented process, [2] constituting a material part of the invention, [3] knowing the same to be especially made or especially adapted for use in an infringement of such patent, [4] and not a staple article or commodity of commerce suitable for substantial noninfringing use, [5] shall be liable as a contributory infringer.

The alleged contributory infringer must have knowledge of the patent. *See Aro Mfg. Co. v. Convertible Top Replacement Co.*, 377 U.S. 476, 488 (1964). Element [4] serves as an important defense, immunizing the sale of staple articles of commerce, i.e., products that have substantial non-infringing uses. Thus, absent evidence of inducing conduct, sellers of non-patented goods are shielded from liability unless the good "has no commercial use except in connection with . . . [the] patented invention." *Dawson Chem. Co. v. Rohm & Haas Co.*, 448 U.S. 176, 184 (1980).

11.4.1.3.3 Joint Infringement

The traditional rule in patent law has been that an infringer must practice every limitation of a claim to infringe it. If no single party practices each step, there could be no infringement. The Federal Circuit appeared to approve a broader theory of liability in *On Demand Machine Corp. v. Ingram Industries., Inc.*, 442 F.3d 1331, 1344-45 (Fed. Cir. 2006), when it "discern[ed] no flaw" in a lower court instruction to the jury that

> [w]hen infringement results from the participation and combined action(s) of more than one person or entity, they are all joint infringers and jointly liable for patent infringement. Infringement of a patented process or method cannot be avoided by having another perform one step of the process or method.

18. The section is reproduced in subdivided form to highlight its essential elements.

A little more than a year later, however, the Federal Circuit returned to the traditional standard, holding that liability for joint infringement can only be found where one party controlled or directed each step in a patented process. *See Muniauction, Inc. v. Thomson Corp.*, 532 F.3d 1318 (Fed. Cir. 2008); *BMC Resources, Inc. v. Paymentech, L.P.*, 498 F.3d 1373 (Fed. Cir. 2007). Arms-length transactions cannot provide a basis for joint infringement.

11.4.1.4 Infringement Analysis

Infringement analysis involves two steps: (1) claim construction; and (2) comparison of properly construed claims with the accused product or process. *See Cybor Corp. v. FAS Techs., Inc.*, 138 F.3d 1448, 1454 (Fed. Cir. 1998) (en banc). The first step, interpreting the claims, was covered in Chapter 5. We now turn to the second step.

11.4.1.4.1 Literal Infringement

Literal infringement exists when the accused product or process contains each and every limitation recited in a claim, "i.e., when the properly construed claim reads on the accused device exactly." *Cole v. Kimberly-Clark Corp.*, 102 F.3d 524, 532 (Fed. Cir. 1996). Accordingly, there can be no literal infringement if the accused product or process lacks any claim limitation. Note that the standards for anticipation under § 102 and literal infringement are identical. As the Federal Circuit has observed, "that which would literally infringe if later anticipates if earlier." *Bristol-Myers Squibb Co. v. Ben Venue Labs., Inc.*, 246 F.3d 1368, 1378 (Fed. Cir. 2001).

One special category of literal claim interpretation relates to so-called "means plus function" or "functional" claim formats.

11.4.1.4.1.1 Interpreting the Literal Scope of Means-Plus-Function Claims (§ 112, ¶ 6)

In *Halliburton Oil Well Cementing Co. v. Walker*, 329 U.S. 1 (1946), the patentee had claimed an apparatus for measuring the depth of oil wells using functional claim limitations: "means communicating with said well for creating a pressure pulse" and "echo receiving means." The patentee did not want to limit itself to a specific means, and instead sought to define the claim through the functions sought. Such claiming formats were relatively common in patent practice. Nonetheless, the Supreme Court invalidated the claims for failing to reveal specific structures. The Court believed that such claims were overbroad, indefinite, and could discourage experimentation by others.

The patent bar promptly persuaded Congress to remove the cloud over the many functional claims in issued and pending patents the *Halliburton* decision created. The provision, which is now codified in § 112, ¶ 6, authorizes the use of the means-plus-function claim format while limiting the scope of such claims to all embodiments set forth in the specification "and equivalents thereof." The determination of "equivalents thereof" is based on the state of technology as of the date that the patent issues. This characterization of "equivalents" differs from the meaning under the "doctrine of equivalents." *See* § 11.4.1.4.2.

11.4.1.4.1.1.1 Determining Whether a Claim Limitation Is Governed by § 112, ¶ 6

The use of the term "means" in a claim limitation typically implies that the inventor used the "means-plus-function" claim format, which invokes the associated statutory limits on the literal scope of that claim limitation. *See Greenberg v. Ethicon Endo-Surgery, Inc.*, 91 F.3d 1580, 1584 (Fed. Cir. 1996); § 5.2.3.5.1. Nonetheless, this implication does not apply where the claim language itself provides the structure that performs the recited function. *See Phillips v. AWH Corp.*, 415 F.3d 1303 (Fed. Cir. 2005) (en banc) (finding that a claim limitation stating "means disposed inside the shell for increasing its load bearing capacity comprising internal steel baffles" provides the relevant structure ("internal steel baffles") and hence is not limited to the embodiments in the specification and equivalents thereof); *Cole v. Kimberly-Clark Corp.*, 102 F.3d 524, 531 (Fed. Cir. 1996) (finding that use of the phrase "perforation means" does not invoke § 112, ¶ 6) .

Conversely, merely because a claim does not include the word "means" does not prevent a claim limitation from being construed as a means-plus-function limitation. *See,* e.g., *Mas-Hamilton Group v. LaGard, Inc.*, 156 F.3d 1206, 1213-15 (Fed.Cir. 1998) (finding that "lever moving element" was not a known structure in the lock art, and hence should be read to invoke the specific embodiments in the specification and equivalents thereof); *Raytheon Co. v. Roper Corp.*, 724 F.2d 951, 957 (Fed. Cir. 1983) (construing functional language introduced by "so that" to be equivalent to "means for" claim language). Whether a claim invokes § 112, ¶ 6 is decided on a limitation-by-limitation basis looking to the patent and the prosecution history. *See Cole*, 102 F.3d at 531.

11.4.1.4.2 Non-Literal Infringement—The Doctrine of Equivalents

The doctrine of equivalents allows for a finding of infringement where the accused product or process is close to the patented invention, but does not literally infringe. The doctrine of equivalents evolved in response to the concern that an

"unscrupulous copyist" could avoid literal infringement of a patented invention by making insubstantial changes to the invention. *Graver Tank & Mfg. Co. v. Linde Air Prods. Co.*, 339 U.S. 605, 607-08 (1950). The doctrine is judge-made, and has long served to provide courts some leeway to ensure that insubstantial variations do not destroy the value of patents. The doctrine of equivalents has increasingly come under scrutiny on the grounds that it introduces tremendous uncertainty into the scope of patents and makes it difficult for competitors to determine where they can legitimately tread. As a result, the Supreme Court and the Federal Circuit have revisited the contours of this doctrine frequently over the past decade. The process of judicial tinkering appears to have come to rest.

There are two tests for determining equivalence: (1) the function-way-result test; and (2) the insubstantial differences test. The use of either test is case-dependent. *See Warner-Jenkinson Co. v. Hilton Davis Chem. Co.*, 520 U.S. 17, 40 (1997). Under the function-way-result test, an accused element is equivalent to a claim limitation "if it performs substantially the same function in substantially the same way to obtain the same result." *Graver Tank*, 339 U.S. at 608 (quoting *Sanitary Refrigerator Co. v. Winters*, 280 U.S. 30, 42 (1929)). Under this test, a finding of equivalence requires that all three prongs be satisfied. Under the insubstantial differences test, equivalence exists where the differences between the element in the accused product or process and the claim limitation are insubstantial. *See* Kenneth D. Bassinger, *Unsettled Expectations in Patent Law:* Festo *and the Moving Target of Claim Equivalence*, 48 How. L.J. 685, 695 (2005). Under either test, non-literal infringement is a question of fact for the jury to decide. *See Cook Biotech Inc. v. Acell, Inc.*, 460 F.3d 1365, 1373 (Fed. Cir. 2006). The doctrine of equivalents determination is judged on the state of technology as of the time of the infringement, not (as in the case of means-plus-function claims) the time the patent issued.

11.4.1.4.2.1 Limiting Principles

While the doctrine of equivalents is a question of fact, the courts have developed various legal doctrines that limit its applicability: (1) the all-elements rule, along with the claim vitiation corollary; (2) prosecution history estoppel, along with the specific exclusion corollary; (3) the prior art rule; and (4) the public dedication rule. Note that these limiting doctrines are not mutually exclusive—the patentee must satisfy all of them to establish infringement under the doctrine of equivalents.

11.4.1.4.2.1.1 The All-Elements (All-Limitations) Rule

The all-elements rule[19] provides that the test for equivalence under the doctrine of equivalents must be applied on an element-by-element (or limitation-by-limitation) basis. A finding of infringement therefore requires that the accused product or process contain each claim limitation or its equivalent. *Id.* at 650-51. Under the all-elements rule, the trier of fact performs an equivalence analysis to determine whether each claim limitation exists in the accused product or process either literally or as an equivalent. However, if no reasonable jury could find an equivalent element in the accused product or process to the claim limitation, the court must grant summary judgment as to noninfringement. *Warner-Jenkinson Co. v. Hilton Davis Chem. Co.*, 520 U.S. 17, 39 n.8 (1997).

11.4.1.4.2.1.1.1 Claim Vitiation

The claim vitiation doctrine is a corollary of the all-elements rule: an accused device cannot be infringing if it would effectively vitiate (or eliminate) any claim limitation. *See Freedman Seating Co. v. Am. Seating Co.*, 420 F.3d 1350, 1358 (Fed. Cir. 2005). The Federal Circuit has applied the claim vitiation rule in varying ways, leading to somewhat unpredictable results. S*ee* Daniel H. Shulman & Donald W. Rupert, *"Vitiating" the Doctrine of Equivalents: A New Patent Law Doctrine*, 12 Fed. Cir. B.J. 457 (2003).

11.4.1.4.2.1.2 Prosecution History Estoppel

Prosecution history estoppel can preclude a patent holder from using the doctrine of equivalents to reclaim subject matter relinquished expressly or by operation of law during patent prosecution. See *Eagle Comtronics, Inc. v. Arrow Commc'n Labs., Inc.*, 305 F.3d 1303, 1315 (Fed. Cir. 2002). Prosecution history estoppel is most often applied where a patent applicant amended or canceled a claim that the patent examiner rejected as unpatentable in light of prior art. Whether prosecution history estoppel applies in a particular case is a question of law. *See Panduit Corp. v. Hellermanntyton Corp.*, 451 F.3d 819, 826 (Fed. Cir. 2006).

---

19. The Federal Circuit prefers to use "limitation" when referring to claim language and "element" when referring to the accused product. *Festo Corp. v. Shoketsu Kinzoku Kabushiki Co.*, 234 F.3d 558, 563 n.1 (Fed. Cir. 2000). Along those lines, the "all-elements rule" is also known as the "all-limitations rule." *Ethicon Endo-Surgery, Inc. v. U.S. Surgical Corp.*, 149 F.3d 1309, 1317 n.1 (Fed. Cir. 1998).

In *Festo Corp. v. Shoketsu Kinzoku Kabushiki Co.*, 535 U.S. 722 (2002), the Supreme Court adopted a rebuttable presumption that amendments made to narrow a claim limitation foreclose later stretching of that limitation to reach an accused technology under the doctrine of equivalents. The patentee can rebut this presumption under three scenarios: (1) the equivalent was unforeseeable to a person having ordinary skill in the art at the time of the amendment; (2) the rationale for the amendment was no more than tangentially related to the equivalent at issue; or (3) another reason suggesting that the patentee could not reasonably be expected to have described the alleged equivalent. Chart 11.5 summarizes guidelines outlined by the Federal Circuit for applying the three rebuttal criteria. *See Festo Corp. v. Shoketsu Kinzoku Kabushiki Co.*, 344 F.3d 1359, 1368-70 (Fed. Cir. 2003) (en banc).

Chart 11.5
Rebuttal Criteria for Presumptive *Festo* Bar

Rebuttal criteria	Application	Focus of inquiry	Evidence the court may consider
The equivalent was unforeseeable at the time of the application.	Unforeseeable equivalent: later-developed technologies or technology unknown in the relevant art. Foreseeable equivalent: old technology or equivalent was known in the prior art in the relevant field of the invention.	Underlying factual issues such as the state of the art and understanding of one skilled in the art at the time of the amendment.	Expert testimony and other extrinsic evidence relating to relevant factual inquiries.
The rationale for the amendment was no more than tangentially related to the equivalent at issue.	Tangential means peripheral or not directly relevant Not tangential: amendment made to avoid prior art containing the alleged equivalent.	Patentee's objective apparent reason for the narrowing amendment, including the context in which the amendment was made.	Prosecution history record and no additional evidence except when expert testimony is necessary for interpretation of that record.
Another reason suggesting that the patentee could not reasonably be expected to have described the alleged equivalent.	Another reason: shortcomings in language.	[No cases yet on point.]	Should be limited to prosecution history record.

11.4.1.4.2.1.2.1 Specific Exclusion

The specific exclusion principle is a corollary to the doctrine of prosecution history estoppel. It provides that a patentee cannot use the doctrine of equivalents to reclaim subject matter which he clearly excluded. *SciMed Life Sys., Inc. v. Advanced Cardiovascular Sys., Inc.*, 242 F.3d 1337, 1347 (Fed. Cir. 2001). A patent may specifically exclude a proposed equivalent from the scope of the claimed invention either implicitly or explicitly. The rule ensures that the public may rely on clear disclaimers in the patent to conclude that the patentee did not seek patent rights for this excluded subject matter.

The specific exclusion doctrine applies where the patentee clearly disclaims subject matter from the scope of the claimed invention in the specification or the claims. Cases involving specific exclusion in the specification focus on explicit disclaimers, such as where the patentee criticizes the equivalent or requires that the invention contain the specific element claimed. *See Gaus v. Conair Corp.*, 363 F.3d 1284, 1291 (Fed. Cir. 2004); *SciMed*, 242 F.3d at 1345. Specific exclusion is rarely applied on the basis of a claim, but where the patentee claims one option in a binary choice setting, specific exclusion precludes the patent holder's assertion that the other option is equivalent. *See Senior Techs., Inc. v. R.F. Techs. Inc.*, 76 F. App'x 318, 321 (Fed. Cir. 2003). Note that the binary choice setting does not simply involve the negation of a claim limitation (i.e., "suede" versus "not suede" or "blue" versus "not blue"), but requires that the claim limitation be one of *only* two options.

11.4.1.4.2.1.3 Prior Art Rule

A third limiting principle of non-literal infringement analysis, the prior art rule, provides that a patentee may not use the doctrine of equivalents to obtain coverage of subject matter in the prior art, *i.e.*, "coverage which he could not lawfully have obtained from the PTO by literal claims." *Wilson Sporting Goods Co. v. David Geoffrey & Assocs.*, 904 F.2d 677, 683-84 (Fed. Cir. 1990). Accordingly, an accused infringer who merely practices the prior art cannot infringe under the doctrine of equivalents. This principle is applied by constructing a hypothetical claim based on the accused technology. *See id.* at 684. If the PTO could have allowed the hypothetical claim over the prior art (i.e., if the prior art did not anticipate or render the hypothetical claim obvious, *Abbott Labs v. Dey, L.P.*, 287 F.3d 1097, 1105-06 (Fed. Cir. 2002)), the prior art does not preclude infringement under the doctrine of equivalents. The patent holder bears the burden of proving that the range of equivalents sought does not cover the prior art. *See Wilson Sporting Goods*, 904 F.2d at 685. This determination is a question of law. *See id.* at 683.

11.4.1.4.2.1.4 The Public Dedication Rule

The public dedication rule (or "disclosure-dedication" rule) provides that a patent holder cannot invoke the doctrine of equivalents to recapture subject matter disclosed but not claimed in a patent. *See Johnson & Johnston Assocs. Inc. v. R.E. Serv. Co.*, 285 F.3d 1046, 1054 (Fed. Cir. 2002) (en banc) *(per curiam)*. The Federal Circuit stated that to hold otherwise would "conflict with the primacy of the claims in defining the scope of the patentee's exclusive right." *Id.* (quoting *Sage Prods. Inc. v. Devon Indus., Inc.*, 126 F.3d 1420, 1424 (Fed. Cir. 1997)). The public dedication rule derives from and promotes the patent system's notice function. The test for determining whether a disclosure has been dedicated to the public is whether "one of ordinary skill in the art can understand the unclaimed disclosed teaching upon reading the written description." *PSC Computer Prods., Inc. v. Foxconn Int'l, Inc.*, 355 F.3d 1353, 1360 (Fed. Cir. 2004). Like prosecution history estoppel, the public dedication rule is a question of law. *See Toro Co. v. White Consol. Indus., Inc.*, 383 F.3d 1326, 1331 (Fed. Cir. 2004). Note that patentees are free to broaden the scope of their patent under the broadening reissue provision, § 251, for up to two years following issuance. See § 11.2.6.3.2.

11.4.1.4.2.2 Interpreting the Non-Literal Scope of Means Plus Function Claims

The question arises whether means-plus-function claims are entitled to one or two stretches for "equivalents"—one as a part of literal infringement analysis under § 112, ¶ 6 (to reach "equivalents thereof" relating to embodiments set forth in the specification) and a second under the doctrine of equivalents. Since the § 112, ¶ 6 literal "equivalents" analysis is based on the state of technology as of the time the patent issues, the doctrine of equivalents provides a second stretch to the extent that the accused device employs "after-arising" technology—means that were not known in the art at the time that the patent issued. *See Al-Site Corp. v. VSI Int'l, Inc.*, 174 F.3d 1308, 1320 (Fed. Cir. 1999).

Even with regard to technology that was known as of the time that the patent issued, the patentee is entitled to additional scope under the doctrine of equivalents to the extent that the *function* of the accused device is substantially the same as the function of the claimed invention. *See id.* at 1320-21; *see also WMS Gaming v. Int'l Game Tech.*, 184 F.3d 1339, 1353 (Fed. Cir. 1999). This is because § 112, ¶ 6 requires that the function of the accused element be identical to the function of the claim limitation, whereas the doctrine of equivalents is broader—allowing substantially similar function.

Nonetheless, the patentee cannot invoke the doctrine of equivalents to reach a substantially similar "structure, material, or act" that did not fall within the scope of the § 112, ¶ 6 "equivalents thereof" with regard to technology that was known

as of the time that the patent issued. The Patent Act will not permit an "equivalent of an equivalent" by applying both § 112, ¶ 6 and the doctrine of equivalents to the structure of a given claim element with regard to technology that the patent draftsperson was fully capable of capturing when preparing the application. *Al-Site*, 174 F.3d at 1320, n.2; *Chiuminatta Concrete Concepts, Inc. v. Cardinal Indus., Inc.*, 145 F.3d 1303, 1310-11 (Fed. Cir. 1998).

11.4.1.4.3 The Reverse Doctrine of Equivalents

The reverse doctrine of equivalents is an equitable doctrine designed "to prevent unwarranted extension of the claims beyond a fair scope of the patentee's invention." *Scripps Clinic & Research Found. v. Genentech, Inc.*, 927 F.2d 1565, 1581 (Fed. Cir. 1991). More than a century ago, the Supreme Court recognized that there may be circumstances in which an accused device that literally infringes a patent should nonetheless be excused from liability because it substantially differs in operative principle and results. Although the so-called "reverse doctrine of equivalents" has rarely been found, it nonetheless continues to be raised. In *Boyden Power-Brake Co. v. Westinghouse*, 170 U.S. 537 (1898), George Westinghouse had invented a train brake that used a central reservoir of compressed air for stopping power in 1869. Further advances in his design, primarily the addition of an air reservoir in each brake cylinder, resulted in a brake that was patented in 1887. An improvement on this 1887 brake, invented by George Boyden, added an ingenious mechanism for pushing compressed air into the brake piston from both the central reservoir and a local reservoir in each brake cylinder. (Westinghouse's brake required a complicated series of passageways to supply air from the two sources.) With the added stopping power of the Boyden brake, engineers could safely operate the increasingly long trains of the late nineteenth century.

The Westinghouse patent included a claim for "the combination of a main air-pipe, an auxiliary reservoir, a brake-cylinder, a triple valve [the device that coordinated the airflows from the main reservoir and the individual brake reservoir] and an auxiliary-valve device, actuated by the piston of the triple-valve . . . for admitting air in the application of the brake." *Id.* at 553-54. The Court noted that the literal wording of the Westinghouse patent could be read to cover Boyden's brake, since it included a "triple valve." But it refused to find infringement on the ground that Boyden's device was a significant contribution that took the invention outside the equitable bounds of the patent, explaining:

> a charge of infringement is sometimes made out, though the letter of the claims be avoided . . . [t]he converse is equally true. The patentee may bring the defendant within the letter of his claims, but if the latter has so far changed the principle of the device that the claims of the patent, literally construed, have ceased to represent his actual invention, he is as little subject to be adjudged an infringer as

> one who has violated the letter of a statute has to be convicted, when he has done nothing in conflict with its spirit and intent.

Id. at 562.

The reverse doctrine of equivalents was recognized—but not applied—once again by the Supreme Court in *Graver Tank & Mfg. Co. v. Linde Air Prods. Co.,* 339 U.S. 605, 608-609 (1950). But since 1898, no case has squarely applied the doctrine to excuse infringement. According to the Federal Circuit, "because products on which patent claims are readable word for word often are in fact the same, perform the same function in the same way, and achieve the same result, as the claimed invention, a defense based on the reverse doctrine of equivalents is rarely offered." *SRI Int'l v. Matsushita Elec. Corp. of Am.*, 775 F.2d 1107, 1123 n.19 (Fed. Cir. 1985); *See Monsanto Co. v. Mycogen Plant Sci., Inc.*, 61 F. Supp. 2d 133, 187-88 (D. Del. 1999) (granting JMOL overturning jury's exoneration of accused infringer under reverse doctrine of equivalents). Indeed, the Federal Circuit has recently observed that "[t]he reverse doctrine of equivalents is rarely applied, and this court has never affirmed a finding of non-infringement under the reverse doctrine of equivalents." *See Roche Palo Alto LLC v. Apotex, Inc.*, 531 F.3d 1372, 1378 (Fed. Cir. 2008) (citing *Tate Access Floors, Inc. v. Interface Architectural Resources, Inc.*, 279 F.3d 1357 (Fed. Cir. 2002)).

11.4.1.5 Extraterritorial Infringement

11.4.1.5.1 Manufacturing Components Within the United States for Assembly Abroad—§ 271(f)

The rights conferred under patent law generally apply only to inventions made, used, sold, or imported into the United States. § 271(a). After the Supreme Court held that there could be no liability for shipping the components of a patented device outside of the United States for purposes of assembly aboard, *see Deepsouth Packing Co. v. Laitram Corp.*, 406 U.S. 518 (1972), Congress added § 271(f) to extend liability for supplying unassembled "components" from the United States for "combination" outside the United States, where the same combination would infringe a patent if it occurred within the United States. The two prongs of infringement under § 271(f) are similar to active inducement and contributory infringement found in §§ 271(b) and (c).

Applying § 271(f) poses several challenges in the digital age. One particularly thorny issue has been the meaning of "component." For example, a "component" does not include the supply of blueprints, plans, or instructions. *Pellegrini v. Analog Devices, Inc.*, 275 F.3d 1113 (Fed. Cir. 2004). Nor does it include software; instead only a tangible, computer-readable medium like a CD can be a "component." *See Microsoft Corp. v. AT&T Corp.*, 127 S. Ct. 1746 (2007). The term "supply" has also been controversial. In *Microsoft*, the Court held that to "supply" a

a component from the United States means to ship it from the United States; making copies abroad does not constitute "supplying." *Id.*

11.4.1.5.2 Importing Products Made Using Patented Processes—§ 271(g)

Section 271(g) was also added in the 1980s to close a loophole pertaining to products made abroad. It establishes liability for importing, making, using, or selling within the United States a non-patented product made abroad using a process that is patented in the United States. A "product" under section (g) must be a manufactured physical article; it does not include intangible information produced or transmitted by a patented process. *See NTP, Inc. v. Research in Motion, Ltd.*, 418 F.3d 1282 (Fed. Cir. 2005). Furthermore, there is no liability if the product is "materially changed by subsequent processes." § 271(g)(1). The Federal Circuit has held that "in the chemical context a 'material' change . . . is a significant change in the compound's structure and properties." *Eli Lilly & Co. v. Am. Cyanamid Co.*, 82 F.3d 1568, 1573 (Fed. Cir. 1996).

11.4.2 Defenses

Section 282 of the Patent Act provides for the following defenses:

(1) Noninfringement, absence of liability for infringement or unenforceability;
(2) Invalidity of the patent or any claim in suit on any ground specified in part II [of the Patent Act] as a condition for patentability;
(3) Invalidity of the patent or any claim in suit for failure to comply with any requirement of sections 112 or 251 [of the Patent Act];
(4) Any other fact or act made a defense by [the Patent Act].

11.4.2.1 Non-infringement

An accused infringer may contend that he does not infringe the asserted patent either literally or under the doctrine of equivalents. Non-infringement exists where the patent holder does not meet the burden of proving infringement by a preponderance of the evidence.

11.4.2.2 Absence of Liability

Even if the accused technology is found to read on the claimed invention, the defendant can prevail by establishing consent, experimental use, or several other legal and equitable defenses.

11.4.2.2.1 Consent or License

An alleged infringer can defend on the ground that the patentee has consented to their use of the technology by, for example, granting a license. A patent license is an agreement or covenant between the patent holder and the licensee stipulating that the patent holder will not sue the licensee for otherwise infringing acts. If such an agreement covers the acts in question, the accused infringer cannot be liable for infringement because her acts were not "without authority" as required by § 271(a).

Patent licenses can be express or implied. An implied license arises by acquiescence, conduct, equitable estoppel, or legal estoppel. *Wang Labs., Inc. v. Mitsubishi Elecs. Am., Inc.*, 103 F.3d 1571, 1580 (Fed. Cir. 1997). Such licenses are generally revocable. The existence and scope of licenses are generally governed by state contract law.

11.4.2.2.1.1 First Sale Doctrine/Exhaustion Principle

Under the first sale doctrine (sometimes referred to as the exhaustion principle), a form of implied license, the first unrestricted sale of a patented product exhausts the patentee's control over that product and it can be resold and repaired without implicating the patent owner's rights. *See Aro Mfg. Co. v. Convertible Top Replacement Co.*, 377 U.S. 476, 484 (1964) (stating that "it is fundamental that sale of a patented article by the patentee . . . carries with it an 'implied license to use.'"). The doctrine of patent exhaustion applies to method claims and the method patent is exhausted by sale of the item that embodies the method. *See Quanta Computer, Inc. v. LG Electronics, Inc.*, 128 S.Ct. 2109 (2008). Although repair of patented product that has been sold is permissible, reconstruction of the patented technology crosses the line into the patentee's "make" right. The line between permitted repair and impermissible reconstruction is not easily determined, resulting in rather vague, context-specific rulings. *See,* e.g., *Hewlett-Packard Co. v. Repeat-O-Type Stencil Mfg. Co.*, 123 F.3d 1445 (Fed. Cir. 1997). Such issues frequently arise in the context of contributory infringement claims, where the alleged infringer is providing specialized replacement parts. Contractual restrictions on resale or reuse can provoke patent misuse allegations and antitrust counterclaims. *See Monsanto Co. v. McFarling*, 363 F.3d 1336, 1341 (Fed. Cir. 2004); *Mallinckrodt, Inc. v. Medipart, Inc.*, 976 F.2d 700 (Fed. Cir. 1992); *see also* § 11.4.2.3.2.

11.4.2.2.1.2 Shop Right

Based on state law, a "shop right" entitles an employer to use patented technology developed by an employee in the employer's "shop." *See McElmurry v.*

Ark. Power & Light Co., 995 F.2d 1576, 1580 (Fed. Cir. 1993). An employer has a shop right where it has provided wages, materials, tools, and workspace to finance its employee's invention. An employee's consent, acquiescence, inducement, or assistance to the employer in using the invention without seeking payment or restricting its use also creates a shop right. *Id.* at 1582. The defense is an equitable doctrine. *Schroeder v. Tracor, Inc.*, No. 99-1281, 1999 U.S. App. LEXIS 30386, at *4-5 (Fed. Cir. Nov. 5, 1999). To determine whether an employer has a shop right to an invention, courts "look to the totality of the circumstances on a case by case basis and determine whether the facts of a particular case demand, under principles of equity and fairness, a finding that a 'shop right' exists." *McElmurry*, 995 F.2d at 1581-82. A shop right is personal to an employer and cannot be assigned or transferred. *See Francklyn v. Guilford Packing Co.*, 695 F.2d 1158, 1163 (9th Cir. 1983). However, a shop right will pass to the purchaser of the employer's entire business. *See Cal. E. Labs., Inc. v. Gould*, 896 F.2d 400, 402 (9th Cir. 1990).

11.4.2.2.2 Experimental Use Defense

Courts have long recognized a common-law defense of experimental use. The Federal Circuit has, however, interpreted this doctrine quite narrowly, limiting it to uses "for amusement, to satisfy idle curiosity, or for strictly philosophical inquiry." *See Madey v. Duke Univ.*, 307 F.3d 1351, 1361-62 (Fed. Cir. 2002). If the use has the "slightest commercial implication," the experimental use defense does not apply. *Id.* at 1362. Additionally, conduct in keeping with the legitimate business of the accused infringer does not qualify for the defense, regardless of the commercial implications. *Id.* Furthermore, whether a user is a profit or non-profit entity is not determinative. *Id.*

In addition to the common-law doctrine of experimental use, § 271(e) creates a limited experimental use exception for submitting information for regulatory purposes. Adopted in 1984 as part of the Drug Price Competition Act (also known as the Hatch-Waxman Act), § 271(e)(1) provides a safe harbor for using a patented drug in testing before the end of the patent term "solely for uses reasonably related to the development and submission" of regulatory information. Without this safe harbor, a competitor seeking to get advance approval of a generic version of a particular drug would infringe if they tested their alternative before the patent term expired, which would effectively lengthen the patent term by the amount of time necessary to test the generic drug for FDA approval. *See Roche Prods. Inc. v. Bolar Pharm. Co.*, 733 F.2d 858 (Fed. Cir. 1984). While the safe harbor is not so expansive as to include "basic scientific research . . . performed without the intent to develop a particular drug," its scope has been interpreted broadly to cover drug testing, human clinical trials, and pre-clinical laboratory testing, or any reasonable research that might be "appropriate to include in a submission to the FDA." *Merck KgaA v. Integra Lifesciences I, Ltd.*, 545 U.S. 193, 205-6 (2005); *see also Integra*

Lifesciences I, Ltd. v. Merck KGaA, 496 F.3d 1334 (Fed. Cir. 2007). In addition to pharmaceuticals, § 271(e)(1) covers experimental testing of medical devices. *See Eli Lilly & Co. v. Medtronic Inc.*, 872 F.2d 402 (Fed. Cir. 1989), *aff'd*, 496 U.S. 661 (1990).

11.4.2.2.3 Prior Use Right

Section 273 of the Patent Act, added by the First Inventor Defense Act of 1999, provides an infringement defense for an earlier inventor of a business method which was subsequently patented by another. This defense is available if the accused infringer "had, acting in good faith, actually reduced the subject matter to practice at least 1 year before the effective filing date of such patent, and commercially used the subject matter before the effective filing date of such patent." § 273(b)(1). Note that the party asserting a prior use defense need not prove that it invented the business method before the patentee in accordance with § 102(g).

11.4.2.2.4 Bar Against Remedies for Infringement of Medical Procedure Patents by Doctors and Hospitals

Following a lawsuit against a doctor to enforce a patent on a cataract surgery procedure in 1993, the American Medical Association lobbied Congress to exclude medical procedure patents from the scope of patentable subject matter. While declining to curtail the scope of § 101, Congress enacted § 287(c) which bars the enforcement of medical procedure patents against medical practitioners or related health care entities. This provision does not, however, insulate sellers of medical devices from indirect (inducement or contributory) infringement of medical procedure patents.

11.4.2.2.5 Sovereign Immunity

During the 1980s, intellectual property owners became concerned that states and state agencies, including public universities, might escape or at least frustrate enforcement of federal intellectual property rights by invoking state sovereign immunity under the Eleventh Amendment of the U.S. Constitution. In the early 1990s, Congress enacted a series of laws expressly abrogating state sovereign immunity for intellectual property infringement, including patent violations. The Supreme Court struck down one such act, the Patent and Plant Variety Remedy Clarification Act, on the grounds that Congress cannot abrogate state sovereign immunity on the basis of its Article I powers under the Constitution and that Congress had not established an adequate basis for abrogation of state sovereign

immunity pursuant to the Fourteenth Amendment. *Fla. Prepaid Postsecondary Educ. Expense Bd. v. College Sav. Bank*, 527 U.S. 627 (1999). As a result, states and state instrumentalities cannot be sued in federal court for patent infringement without their consent.

11.4.2.3 Unenforceability

A finding that a patent is unenforceable renders each and every claim of that patent unenforceable. By contrast, a finding of invalidity is assessed on a claim-by-claim basis, the result of which may be that some claims are held invalid whereas others are sustained and may continue to be enforceable.

11.4.2.3.1 Inequitable Conduct

Where a patent applicant breaches the duty to prosecute a patent application in good faith and candor, it may result in a finding of inequitable conduct. *See* 37 C.F.R. § 1.56; *Purdue Pharma L.P. v. Endo Pharms. Inc.*, 410 F.3d 690, 695 (Fed. Cir. 2005). Inequitable conduct may "arise from an affirmative misrepresentation of a material fact, failure to disclose material information, or submission of false material information, coupled with an intent to deceive or mislead the PTO." *Id.* Inequitable conduct is not limited to the patent-in-suit; it may also render related patents unenforceable where the inequitable conduct had an "immediate and necessary relation" to other patents. *See Consol. Aluminum Corp. v. Foseco Int'l Ltd.*, 910 F.2d 804, 810-12 (Fed. Cir. 1990) (quoting *Keystone Driller Co. v. Gen. Excavator Co.*, 290 U.S. 240, 245 (1933)).

The accused infringer must prove both materiality and intent by clear and convincing evidence. *See Purdue Pharma*, 410 F.3d at 695. Once these threshold findings are established, the court "must weigh them to determine whether the equities warrant a conclusion that inequitable conduct occurred." *Id.* at 696. Note that "[t]he more material the omission or the misrepresentation, the lower the level of intent required to establish inequitable conduct, and vice versa." *Critikon, Inc. v. Becton Dickinson Vascular Access, Inc.*, 120 F.3d 1253, 1256 (Fed. Cir. 1997).

PTO Rule 56 provides the standard courts generally apply for materiality. Prior to 1992, the rule held that "information is material where there is a substantial likelihood that a reasonable examiner would consider it important in deciding whether to allow the application to issue as a patent." 37 C.F.R. § 1.56(b). Under the current version of the rule, applicable to all patent applications pending or filed after March 16, 1992, information is material to patentability when:

> [I]t is not cumulative to information already of record or being made of record in the application, and

(1) It establishes, by itself or in combination with other information, a prima facie case of unpatentability of a claim; or
(2) It refutes, or is inconsistent with, a position the applicant takes in:
  (i) Opposing an argument of unpatentability relied on by the Office, or
  (ii) Asserting an argument of patentability.

37 C.F.R. § 1.56(b) (2006). Note that the "new standard was not intended to constitute a significant substantive break with the pre-1992 standard." *Purdue Pharma*, 410 F.3d at 696.

Intent to mislead or deceive the PTO may be shown by direct evidence or inferred from clear and convincing evidence of the surrounding circumstances. *See Purdue Pharma*, 410 F.3d at 700. If the accused infringer shows a high level of materiality and proof that the patentee knew or should have known of that materiality, the patentee "can expect to find it difficult to establish 'subjective good faith' sufficient to prevent the drawing of an inference of intent to mislead." *Critikon*, 120 F.3d at 1257.

11.4.2.3.2 Patent Misuse

The affirmative defense of patent misuse exists to prevent harm to the market caused by a patentee extending a patent's right to exclude beyond its legal scope. The underlying principle of misuse is that an alleged infringer must prove by clear and convincing evidence that a patentee has both "impermissibly broadened the physical or temporal scope of the patent grant" and caused some "anticompetitive effect." *See Va. Panel Corp. v. MAC Panel Co.*, 133 F.3d 860 (Fed. Cir. 1997). Where the patentee's behavior remains within the grant of the patent right to exclude, however, there can never be patent misuse. *See Monsanto Co. v. McFarling*, 363 F.3d 1336, 1341 (Fed. Cir. 2004). In response to concern that this judge-made doctrine was vague, unpredictable, and overbroad, Congress exempted several specific behaviors from the doctrine by adding § 271(d). For example, enforcing a patent or refusing to license cannot constitute patent misuse. *See* §§ 271(d)(3)-(4). Courts scrutinize other behavior under antitrust's familiar levels of review: per se and rule of reason.

Many behaviors can theoretically constitute patent misuse. Tying sales of a patented good and an unpatented good, package licenses, extending royalties beyond the patent term, grantback clauses, field-of-use restrictions, horizontal arrangements like patent pools, price discrimination, and market division can all constitute patent misuse if they improperly expand a patent right to anticompetitive effect. A detailed discussion of this doctrine can be found in 1 Herbert Hovenkamp, Mark D. Janis & Mark A. Lemley, IP and Antitrust § 3.3 (2006).

11.4.2.3.3 Equitable Estoppel

Equitable estoppel arises where a patentee misleads an alleged infringer into believing that she would not be sued for using the patented technology. The defense may bar all relief on an infringement claim. *See A.C. Aukerman Co. v. R.L. Chaides Constr. Co.*, 960 F.2d 1020, 1041 (Fed. Cir. 1992) (en banc). Three elements must be established to prove equitable estoppel:

(1) The actor, who usually must have knowledge of the true facts, communicates something in a misleading way, either by words, conduct or silence.
(2) The other relies upon that communication.
(3) And the other would be harmed materially if the actor is later permitted to assert any claim inconsistent with his earlier conduct.

Id. (quoting D.B. Dobbs, Handbook on the Law of Remedies § 2.3, at 42 (1973)). In the patent infringement context, the "something" communicated is that the plaintiff will not bring an infringement claim against the accused infringer. *See Auckerman*, 960 F.2d at 1042. Accordingly, the defendant must not only be aware of the patentee and/or his patent but also know or reasonably be able to infer that the patentee has been aware of the accused infringer's acts for some time. A plaintiff's inaction may give rise to the inference that he abandoned his infringement claim when combined with other facts regarding the parties' relationship or contracts with each other. Regarding the third factor, material harm may include a change of economic position or loss of evidence. *See id.* at 1043.

Even where the defendant proves all three elements of the estoppel defense, the court must consider "any other evidence and facts respecting the equities of the parties in exercising its discretion and deciding whether to allow the defense of equitable estoppel to bar the suit." *Id.* Note that the defense does not require an unreasonable delay in filing suit, as is necessary for laches. *See id.* at 1041-42. However, such a delay may be evidence relevant to determining whether the plaintiff's conduct was misleading.

11.4.2.3.4 Laches

The equitable defense of laches may be available where the plaintiff unreasonably delayed filing her infringement suit. *See A.C. Aukerman Co. v. R.L. Chaides Constr. Co.*, 960 F.2d 1020, 1032 (Fed. Cir. 1992) (en banc). The defense is applicable where the accused infringer proves two factors:

(1) [T]he plaintiff delayed filing suit for an unreasonable and inexcusable length of time from the time the plaintiff knew or reasonably should have known of its claim against the defendant, and
(2) [T]he delay operated to the prejudice or injury of the defendant.

Id. at 1032. The period of delay is defined as the time from when the plaintiff knew or reasonably should have known of the defendant's alleged infringing acts until the date of suit. This period may not begin until after the patent issues. Regarding the second factor, prejudice to the defendant may be either economic or evidentiary. *See id.* at 1033. Note that a laches defense may be defeated where the infringer "has engaged in particularly egregious conduct which would change the equities significantly in plaintiff's favor." *Id.* (quoting *TWM Mfg. Co. v. Dura Corp.*, 592 F.2d 346, 349 (6th Cir. 1979)). Laches only bars damages accrued prior to suit. *See id.* at 1041.

A rebuttable presumption of laches exists where the accused infringer proves that the plaintiff delayed filing suit for more than six years after actual or constructive knowledge of the defendant's alleged infringing acts. *See id.* at 1035-36, 1038. Note that the defendant's burden of persuasion does not shift as a result of the plaintiff's six-year delay. *See id.* at 1039.

11.4.2.3.4.1 Prosecution Laches

A special form of laches—prosecution laches—renders a patent unenforceable where the patentee unreasonably delayed in prosecuting the patent. *See Symbol Techs., Inc. v. Lemelson Med., Educ. & Research Found., L.P.*, 277 F.3d 1361 (Fed. Cir. 2002). The Federal Circuit has left the threshold for applying prosecution laches somewhat vague, but stressed that it should only be invoked in "egregious cases of misuse of the statutory patent system." *See Symbol Techs., Inc. v. Lemelson Med., Educ. & Research Found., L.P.*, 422 F.3d 1378, 1385 (Fed. Cir. 2005). In *Symbol Technologies*, the trial court found that the patent applications had been pending for between 18 and 35 years, the applicant had engaged in "culpable neglect" in allowing them to linger, and intervening rights sprang up. The Federal Circuit found no abuse of discretion by the district court in holding the patents unenforceable. Although the Federal Circuit has yet to explain the prosecution laches doctrine further, several district court decisions have applied the doctrine to a range of circumstances and explored its contours. *See Reiffin v. Microsoft Corp.*, 270 F. Supp. 2d 1132 (N.D. Cal. 2003) (collecting and explaining cases); *see also Novozymes A/S v. Genencor Int'l, Inc.*, 446 F. Supp. 2d 297, 333 (D. Del. 2006); *Regents of the Univ. of Cal. v. Monsanto Corp.*, 2005 U.S. Dist. LEXIS 40379, at *65-*71 (N.D. Cal. 2005).

11.4.2.4 Invalidity

The invalidity defense may be asserted where the patent fails to comply with any of the statutory requirements provided in §§ 101, 102, 103, 112, and 251. Under § 282, a patent is presumed to be valid. "The presumption of validity is based on the presumption of administrative correctness of actions of the agency

charged with examination of patentability." *Applied Materials, Inc. v. Advanced Semiconductor Materials Am., Inc.*, 98 F.3d 1563, 1569 (Fed. Cir. 1996). Accordingly, the burden of proving invalidity of a claim rests on the accused infringer, who must generally prove invalidity by clear and convincing evidence. As noted above, however, *see* § 11.3.5, the Supreme Court indicated that "the rationale underlying the presumption—that the PTO, in its expertise, has approved the claim—seems much diminished" in a case in which the PTO had not considered the full range of prior art bearing on obviousness. *KSR*, 127 S. Ct. at 1745.

Once a claim is declared invalid, the patentee is collaterally estopped from asserting the claim unless she can show that she did not have "a fair opportunity procedurally, substantively and evidentially to pursue [her] claim the first time." *Blonder-Tongue Labs., Inc. v. Univ. of Ill. Found.*, 402 U.S. 313, 332-33, 350 (1971).

11.4.2.4.1 Double Patenting

Courts have interpreted the patent law to forbid a second patent from covering the same invention or an obvious variation of it so as to prevent patentees from extending the duration of their patents by patenting the same subject matter more than once. The cases distinguish between two forms of double patenting: (1) so-called "statutory" or "same-invention" double patenting; and (2) "obvious-type" or "non-statutory" double patenting. The former draws upon the language of § 101 stating that "[w]hoever invents or discovers any new and useful [invention] may obtain *a* patent therefore . . . ." (emphasis added.) Use of the singular implies that inventors are entitled to only one patent per invention. The latter is a judicial doctrine intended to prevent prolongation of the patent term through the assertion of claims that were made obvious by a prior patent of the same inventor. A patent which merely discloses a prior invention does not double patent—only the claims matter.

11.4.2.4.1.1 Statutory or Same Invention

Statutory double patenting occurs when the claims of a later patent would infringe an earlier issued patent by the same inventor. This can happen where multiple patents derive from a common application. The courts have interpreted § 121 (relating to divisional applications, *see* § 11.2.3.3) as shielding applicants subject to a restriction requirement from the double patenting doctrine. *See Eli Lilly & Co. v. Barr Labs., Inc.*, 251 F.3d 955 (Fed. Cir. 2001) (holding that a species patent that issues before an earlier-filed genus patent is not a double patent if the order of issue was due solely to PTO delay); *Gerber Garment Tech., Inc. v. Letra Sys.*, 916 F.2d 683 (Fed. Cir. 1990) (divisional application from a PTO restriction require-

ment is not a double patent as long as divisional claims have not materially changed).

11.4.2.4.1.2 Non-Statutory or Obvious-Type

Obvious-type double patenting occurs when a later patent is made obvious by an earlier patent of the same inventor. Thus, where a prior patent for "pork" packing exists, a later patent which claims technology for "meat" packing is an obvious-type double patent, but not a same-invention double patent. *See Eli Lilly & Co. v. Barr Labs., Inc.*, 251 F.3d 955, 967-72 (Fed. Cir. 2001); *In re Vogel*, 422 F.2d 438 (CCPA 1970). Where double patenting allegations arise, patentees often elect to shorten the term of their second patent so that it expires with the first, precluding concern over double patenting as long as each subsequent patent remains commonly owned. *See* § 253; 37 C.F.R. § 1.321(c)(3); § 11.2.5.1 (terminal disclaimer).

11.4.2.5 Antitrust Counterclaims

While not technically a defense, antitrust counterclaims frequently arise in patent cases. *See* 1 Herbert Hovenkamp, Mark D. Janis & Mark A. Lemley, IP and Antitrust § 11.1,11-2 (2006) (observing that between 1993 and 2000, there were more than 100 reported decisions regarding counterclaims alleging the original suit was anticompetitive behavior in violation of the antitrust laws). Patent litigation can constitute an attempt to monopolize in violation of § 2 of the Sherman Act in two contexts: (1) where the counter-claimant can show that the patentee obtained the patent through fraud on the Patent Office, *see*, e.g., *Walker Process Equipment, Inc. v. Food Machinery and Chemical Corp.*, 382 U.S. 172 (1965); and (2) where the counter-claimant can establish that the litigation is a "mere sham," which requires proving that the initial suit is objectively baseless and motivated by a desire to impose harm. *See In re Indep. Serv. Orgs. Antitrust Litig.*, 203 F.3d 1322, 1326 (Fed. Cir. 2000); *Nobelpharma AB v. Implant Innovations, Inc.*, 141 F.3d 1059 (Fed. Cir. 1998); *Handgards, Inc. v. Ethicon, Inc.*, 601 F.2d 986 (9th Cir. 1979).

Most antitrust counterclaims ultimately fail. *See* David R. Steinman & Danielle S. Fitzpatrick, *Antitrust Counterclaims in Patent Infringement Cases: A Guide to Walker Process and Sham-Litigation Claims*, 10 Tex. Intell. Prop. L.J. 95, 99 & n.22 (2001). Because of the Federal Circuit's strict requirements for stating a Sherman Act § 2 claim, and the Supreme Court's concern about the scope of discovery in antitrust cases, these counterclaims can potentially be dismissed on the pleadings or on summary judgment. *See Bell Atl. Corp. v. Twombly*, 127 S. Ct. 1955 (2007).

11.4.3 Remedies

Patent law provides a potent arsenal of remedies, including injunctive relief, damages (which can be enhanced based on an infringer's conduct), costs, prejudgment interest, and attorney fees.

11.4.3.1 Injunctive Relief

Section 283 of the Patent Act provides that courts "may grant injunctions in accordance with the principles of equity to prevent the violation of any right secured by patent, on such terms as the court deems reasonable." Injunctive relief serves to protect and uphold the right to exclude granted by a patent. *Smith Int'l v. Hughes Tool Co.*, 718 F.2d 1573, 1577-78 (Fed. Cir. 1983). The law permits both preliminary and permanent injunctions.

11.4.3.1.1 Preliminary Injunction

In assessing whether to grant a preliminary injunction, the court must consider four factors, with the burden of proof on the moving party:

(1) The likelihood of the movant's success on the merits (validity, enforceability, and infringement),

(2) The irreparability of harm to the movant without an injunction,

(3) The balance of hardships between the parties, and

(4) The demands of the public interest.

Mentor Graphics Corp. v. Quickturn Design Sys., Inc., 150 F.3d 1374, 1377 (Fed. Cir. 1998); *see generally* Chapter 3. The court must balance these factors in the interests of equity. No one factor is dispositive. *See Hybritech Inc. v. Abbott Labs.*, 849 F.2d 1446, 1451 (Fed. Cir. 1988). Prior to the establishment of the Federal Circuit in 1982, courts rarely granted preliminary injunctive relief in patent cases on the grounds that likelihood of success on the merits typically required prior judicial determination of validity and the difficulty of establishing irreparable harm due to the availability of compensatory damages after trial. The Federal Circuit substantially eased these requirements soon after its creation by emphasizing the role of equity to protect the right to exclude and erecting a rebuttable presumption of irreparable harm once validity and continuing infringement were established. *See Smith Int'l v. Hughes Tool Co.*, 718 F.2d 1573 (Fed. Cir.). A decade later, the Federal Circuit shifted toward a higher burden on movants, noting that a preliminary injunction "is a drastic and extraordinary remedy . . . not to be routinely granted." *See Intel v. ULSI*, 995 F.2d 1566, 1568 (Fed. Cir. 1993). The Supreme Court's decision in *eBay Inc. v. MercExchange, L.L.C.*, 547 U.S. 388 (2006), discussed in § 11.4.3.1.2, provides the most authoritative word on the exercise of discretion in assessing injunctive relief in patent cases. Although the case involved

the granting of permanent injunctive relief, its analysis applies with extra force in the context of preliminary injunctions—where caution in granting relief is especially important.

11.4.3.1.2 Permanent Injunction

A court may enter a permanent injunction after a final judgment of infringement in accord with principles of equity. § 283. To obtain a permanent injunction, the plaintiff must satisfy a four-factor test, similar to the test used for preliminary injunctions. *See eBay Inc. v. MercExchange, L.L.C.*, 547 U.S. 388, 391 (2006). The plaintiff must show:

(1) That it has suffered an irreparable injury;

(2) That remedies available at law, such as monetary damages, are inadequate to compensate for that injury;

(3) That, considering the balance of hardships between the plaintiff and defendant, a remedy in equity is warranted; and

(4) That the public interest would not be disserved by a permanent injunction.

In the past, courts routinely issued permanent injunctions once infringement had been found. *See id.* at 393-94 ("The [Federal Circuit] court articulated a 'general rule,' unique to patent disputes, 'that a permanent injunction will issue once infringement and validity have been adjudged.'"). However, in *eBay*, the Supreme Court explicitly overruled such categorical granting of injunctive relief. *See id.* at 394. Accordingly, courts must carefully apply the four-factor test in determining whether to grant a permanent injunction. As with all injunctions, the district court's order is reviewed for abuse of discretion.

11.4.3.2 Monetary Damages

Section 284 of the Patent Act provides:

Upon a finding for the claimant the court shall award the claimant damages adequate to compensate for the infringement, but in no event less than a reasonable royalty for the use made of the invention by the infringer, together with interest and costs fixed by the Court. When the damages are not found by a jury, the court shall assess them. In either event, the court may increase the damages up to three times the amount found or assessed.

Section 286 establishes a six-year statute of limitations, barring patentees from recovering damages for any infringing acts committed more than six years prior to the filing of the complaint or counterclaim for infringement.

11.4.3.2.1 Compensatory Damages

Courts apply several approaches for measuring damages "adequate to compensate" for a defendant's infringement.

11.4.3.2.1.1 Lost Profits

To recover lost profits damages, the patentee must prove a causal relation between the infringement and its lost profits. *See Crystal Semiconductor Corp. v. Tritech Microelectronics Int'l, Inc.*, 246 F.3d 1336, 1354 (Fed. Cir. 2001). Accordingly, the patentee must show "a reasonable probability that 'but for' the infringing activity, the patentee would have made the infringer's sales." *Id.* A "helpful, but non-exclusive" method for establishing "but-for" causation, *Rite-Hite Corp. v. Kelley Co.*, 56 F.3d 1538, 1545 (Fed. Cir. 1995) (en banc), is the four-factor "DAMP" test articulated by the Sixth Circuit in *Panduit Corp. v. Stahlin Bros. Fibre Works, Inc.*, 575 F.2d 1152 (6th Cir. 1978). Under this test, the patentee must prove:

(1) Demand for the patented product;
(2) Absence of acceptable noninfringing substitutes;
(3) Manufacturing and marketing capability to exploit the demand; and
(4) Profit he would have made.

Id. at 1156. Additionally, the patentee is required to show that the damages were or should have been reasonably foreseeable by an infringing competitor in the relevant market. *See Rite-Hite*, 56 F.3d at 1546.

11.4.3.2.1.2 Convoyed Sales

A patentee may recover damages on an entire apparatus containing its patented component or damages for lost sales of unpatented components sold with the patented item ("convoyed" sales). *See King Instruments Corp. v. Perego*, 65 F.3d 941, 956 (Fed. Cir. 1995) (Nies, J., dissenting-in-part). Whether such damages are recoverable is governed by satisfaction of the entire market value rule. This rule "recognizes that the economic value of a patent may be greater than the value of the sales of the patented part alone." *Id.* at 951 n.4 (majority opinion). The patentee must show that "the patent-related feature is the basis for customer demand for the unpatented parts to which it seeks to extend its damages." *Id.* at 956 (Nies, J., dissenting-in-part). Furthermore, recovery for "convoyed" sales requires that the unpatented components "function together with the patented component in some manner so as to produce a desired end product or result. All the components together must be analogous to components of a single assembly

or be parts of a complete machine, or they must constitute a functional unit." *Rite-Hite*, 56 F.3d at 1550.

11.4.3.2.1.3 Price Erosion

The patentee may also recover additional lost profits damages under a price erosion theory. *See Crystal Semiconductor Corp. v. TriTech Microelectronics Int'l, Inc.*, 246 F.3d 1336, 1357 (Fed. Cir. 2001). To recover for price erosion damages, a patentee is required to prove that "but for" the infringement, she would have sold her patented invention at a higher price. Furthermore, the patentee must prove the number of products she would have sold at this price. Accordingly, "the patentee's price erosion theory must account for the nature, or definition, of the market, similarities between any benchmark market and the market in which price erosion is alleged, and the effect of the hypothetically increased price on the likely number of sales at that price in that market." *Id.*

Because lost sales and price erosion are "inextricably linked," the patentee must show how a price increase would have affected her profits due to lost sales. *See id.* at 1360. Consequently, the court should not independently analyze lost profits and price erosion damages. *See id.*

11.4.3.2.1.4 Reasonable Royalty

Under § 284, the patentee may recover no less than a reasonable royalty on the infringer's sales for which she has not shown entitlement to lost profits. *See Rite-Hite Corp. v. Kelley Co.*, 56 F.3d 1538, 1554 (Fed. Cir. 1995) (en banc). A reasonable royalty may be based upon an established royalty, if one exists, or if not, upon the result of a hypothetical negotiation between the patentee and infringer at the time the infringement began. While this hypothetical negotiation is typically referred to as a "willing licensor/willing licensee" negotiation, *id.* at 1554 n.13, it has been said that the calculation of a reasonable royalty cannot be viewed "as the equivalent of ordinary royalty negotiations among truly 'willing' patent owners and licensees." *Panduit Corp. v. Stahlin Bros. Fibre Works, Inc.*, 575 F.2d 1152, 1158 (6th Cir. 1978). In *Georgia-Pacific Corp. v. U.S. Plywood Corp.*, 318 F. Supp. 1116 (S.D.N.Y. 1970), the Southern District Court of New York provided a broad (although non-exhaustive) and often-cited list of factors relevant in calculating a reasonable royalty:

(1) The royalties received by the patentee for the licensing of the patent in suit, proving or tending to prove an established royalty.
(2) The rates paid by the licensee for the use of other patents comparable to the patent in suit.

(3) The nature and scope of the license, as exclusive or non-exclusive; or as restricted or non-restricted in terms of territory or with respect to whom the manufactured product may be sold.
(4) The licensor's established policy and marketing program to maintain his patent monopoly by not licensing others to use the invention or by granting licenses under special conditions designed to preserve that monopoly.
(5) The commercial relationship between the licensor and licensee, such as, whether they are competitors in the same territory in the same line of business; or whether they are inventor and promotor.
(6) The effect of selling the patented specialty in promoting sales of other products of the licensee; the existing value of the invention to the licensor as a generator of sales of his non-patented items; and the extent of such derivative or convoyed sales.
(7) The duration of the patent and the term of the license.
(8) The established profitability of the product made under the patent; its commercial success; and its current popularity.
(9) The utility and advantages of the patent property over the old modes or devices, if any, that had been used for working out similar results.
(10) The nature of the patented invention; the character of the commercial embodiment of it as owned and produced by the licensor; and the benefits to those who have used the invention.
(11) The extent to which the infringer has made use of the invention; and any evidence probative of the value of that use.
(12) The portion of the profit or of the selling price that may be customary in the particular business or in comparable businesses to allow for the use of the invention or analogous inventions.
(13) The portion of the realizable profit that should be credited to the invention as distinguished from non-patented elements, the manufacturing process, business risks, or significant features or improvements added by the infringer.
(14) The opinion testimony of qualified experts.
(15) The amount that a licensor (such as the patentee) and a licensee (such as the infringer) would have agreed upon (at the time the infringement began) if both had been reasonably and voluntarily trying to reach an agreement; that is, the amount which a prudent licensee—who desired, as a business proposition, to obtain a license to manufacture and sell a particular article embodying the patented invention—would have been willing to pay as a royalty and yet be able to make a reasonable profit and which amount would have been acceptable by a prudent patentee who was willing to grant a license.

Id. at 1120.

As discussed more fully in § 7.3.4.7, this list of factors can be difficult to apply in assessing damages for multi-component, multi-feature, and multi-"property" (as in multi-"characteristic") devices or processes in which the patented improvements relates to only one or a few component(s), feature(s), or property(ies). As

the Supreme Court recognized long ago, it would be "very grave error to instruct a jury 'that as to the measure of damages the same rule is to govern, whether the patent covers an entire machine or an improvement on a machine.'" *Seymore v. McCormick*, 57 U.S. 480, 491 (1853); *see also Westinghouse Elec. & Mfg. Co. v. Wagner Co.*, 225 U.S. 604, 614-15 (1912) ("[The] invention may have been used in combination with valuable improvements made, or other patents appropriated by the infringer, and each may have jointly, but unequally contributed to the profits. In such case, if plaintiff's patent only created a part of the profits, he is only entitled to recover that part of the net gains."); *Garretson v. Clark*, 111 U.S. 120, 121 (1884) ("When a patent is for an improvement, and not for an entirely new machine or contrivance, the patentee must show in what particulars his improvement has added to the usefulness of the machine or contrivance.").

11.4.3.2.1.5 Marking Requirements

The Patent Act encourages patentees and persons who make, sell, or import any patented article to provide notice to the public by marking the article or, if the article cannot be marked, the package containing it with "patent" or "pat." and the patent number. *See* § 287(a). While marking is not required for patent protection, the failure to mark will preclude the award of damages unless the infringer was notified of the infringement and subsequently continued to infringe. In such a case, damages may only be awarded for infringing acts performed after such notice (which includes the filing of an infringement action). "Actual notice [under the second prong of § 287(a)] requires the affirmative communication of a specific charge of infringement by a specific accused product or device." *See Amsted Indus. Inc. v. Buckeye Steel Castings Co.*, 24 F.3d 178, 187 (Fed. Cir. 1994). Mere notice of the patent itself or its ownership does not constitute sufficient notice for purposes of the actual notice prong of § 287(a). The notice inquiry must focus on the patentee's actions as opposed to the infringer's knowledge.

The marking provision of § 287(a) does not apply to patents claiming only processes or methods. *See Am. Med. Sys., Inc. v. Med. Eng'g Corp.*, 6 F.3d 1523, 1538 (Fed. Cir. 1993). However, the provisions apply "[w]here the patent contains both apparatus and method claims . . . to the extent that there is a tangible item to mark by which notice of the asserted method claims can be given." *Id.* at 1538-39.

Several courts have interpreted the marking requirement to apply to websites offering or running patented software. In *IMX, Inc. v. Lendingtree, LLC*, 79 U.S.P.Q.2d 1373 (D. Del. 2005), *motion for reconsideration denied*, 2006 U.S. Dist. LEXIS 551 (D. Del. 2006), the court held that Internet vendors of downloadable patented software must mark their websites in order to satisfy § 287(a): "[a]lthough IMX did not make or sell the computer components through which its patented system is processed, and although the IMX website itself was not the patented invention, nevertheless . . . the website is intrinsic to the patented system

and constitutes a 'tangible item to mark by which notice of the asserted method claims can be given.'" Similarly, the court in *Soverain Software LLC v. Amazon.com, Inc.*, 383 F. Supp. 2d 904 (E.D. Tex. 2005), held that websites were "tangible items," and thus the patentee was required to mark its websites in order to comply with the marking provision and establish entitlement to damages for willful infringement.

11.4.3.2.2 Enhanced Damages

Under § 284, the court may increase damages up to three times the compensatory award. An award of enhanced damages and the extent of the enhancement are within the court's discretion. *See Read Corp. v. Portec, Inc.*, 970 F.2d 816, 826 (Fed. Cir. 1992), *abrogated on other grounds*, *Markman v. Westview Instruments, Inc.*, 52 F.3d 967 (Fed. Cir. 1995) (en banc). Courts generally award enhanced damages where the infringement is willful, which is based on an objective recklessness standard. *See In re Seagate*, 497 F.3d 1360 (Fed. Cir. 2007) (en banc).[20] Nevertheless, a finding of willful infringement does not require an enhanced damages award. Willful infringement is a question of fact. *See Fuji Photo Film Co. v. Jazz Photo Corp.*, 394 F.3d 1368, 1373 (Fed. Cir. 2005).

Ultimately, whether and by how much to grant enhanced damages depends on the egregiousness of the infringer's conduct based on all the facts and circumstances. *See Read Corp.*, 970 F.2d at 826. In *Read Corp*, the Federal Circuit listed nine factors relevant to this determination, including deliberate copying by the infringer, the infringer's behavior in the litigation, remedial action by the infringer, and the infringer's motivation. *See id.* at 826-827.

An important issue surrounding willfulness is whether the defendant sought the opinion of counsel upon learning of the plaintiff's patent. *See Knorr-Bremse Systeme Fuer Nutzfahrzeuge GmbH v. Dana Corp.*, 383 F.3d 1337 (Fed. Cir. 2004) (en banc). The trier of fact may not draw an adverse inference either where the defendant invokes the attorney–client and/or work-product privilege and withholds the opinion of counsel, or where the defendant has declined to obtain an

---

20. The Federal Circuit noted that:

> to establish willful infringement, a patentee must show by clear and convincing evidence that the infringer acted despite an objectively high likelihood that its actions constituted infringement of a valid patent. . . . The state of mind of the accused infringer is not relevant to this objective inquiry. If this threshold objective standard is satisfied, the patentee must also demonstrate that this objectively-defined risk (determined by the record developed in the infringement proceeding) was either known or so obvious that it should have been known to the accused infringer. We leave it to future cases to further develop the application of this standard.

497 F.3d at 1371.

opinion letter. *See id.* at 1344-45; *see also In re Seagate*, 497 F.3d 1360 (Fed. Cir. 2007) (en banc).

11.4.3.2.3 Prejudgment Interest

Section 284 authorizes the patentee to recover prejudgment interest. The Supreme Court has held that prejudgment interest "should be awarded . . . absent some justification for withholding such an award." *Gen. Motors Corp. v. Devex Corp.*, 461 U.S. 648, 657 (1983). The court may award prejudgment interest only on compensatory damages and not on enhanced damages. *See Underwater Devices Inc. v. Morrison-Knudsen Co.*, 717 F.2d 1380, 1389 (Fed. Cir. 1983), *overruled on other grounds by Knorr-Bremse Systeme Fuer Nutzfahrzeuge GmbH v. Dana Corp.*, 383 F.3d 1337 (Fed. Cir. 2004) (en banc) and *In re Seagate*, 497 F.3d 1360 (Fed. Cir. 2007) (en banc). Interest is calculated from the time of infringement until the date judgment is rendered. *See General Motors*, 461 U.S. at 656. The district court has substantial discretion to determine both the prejudgment interest rate and the assessment of simple or compound interest to the damages. *See Gyromat Corp. v. Champion Spark Plug Co.*, 735 F.2d 549, 556-57 (Fed. Cir. 1984).

11.4.3.3 Costs

The award of costs under § 284 refers to Fed. R. Civ. P. 54(d)(1), which provides that "costs other than attorneys' fees shall be allowed as of course to the prevailing party unless the court otherwise directs." Fed. R. Civ. P. 54(d)(1). 28 U.S.C. § 1920 lists the types of costs the prevailing party may recover under Fed. R. Civ. P. 54(d)(1), some of which include court reporter fees, docket fees, and compensation for court appointed experts.

11.4.3.4 Attorney Fees

Section 285 provides that the "court in exceptional cases may award reasonable attorney fees to the prevailing party." Bad-faith litigation and inequitable conduct may render a case exceptional. *See Mahurkar v. C.R. Bard, Inc.*, 79 F.3d 1572, 1579 (Fed. Cir. 1996). Additionally, a finding of willful infringement may be sufficient grounds for an award of attorney fees. *See Avia Group Int'l, Inc. v. L.A. Gear Cal., Inc.*, 853 F.2d 1557, 1567 (Fed. Cir. 1988). The Federal Circuit has noted that it is a "general rule that the district court must normally explain why it decides that a case is not exceptional under 35 U.S.C. § 285 when a factual finding of willful infringement has been established and, if exceptional, why it decides not to award attorney fees." *Transclean Corp. v. Bridgewood Servs., Inc.*, 290 F.3d 1364, 1379 (Fed. Cir. 2002).

11.5 Appeals and Parallel Litigation

The blockbuster patent case can unfold before multiple judicial and quasi-judicial bodies. As discussed in § 11.2.6.4, parties can request the PTO to reexamine issued patents. The following section discusses the appellate process and its consequences for patent cases as well as the various forms of parallel litigation that can occur.

11.5.1 Appeals to the Federal Circuit

In 1982, Congress created the U.S. Court of Appeals for the Federal Circuit and gave it exclusive jurisdiction over all appeals in patent cases. *See* 28 U.S.C. § 1295 (2000). The Federal Circuit was deemed necessary because patent cases were "inconsistently adjudicated," which led to forum shopping. S. Rep. No. 97-275 at 5 (1981). Congress believed that unpredictability of patent law hampered technological innovation.

11.5.1.1 Appellate Jurisdiction

The Federal Circuit has jurisdiction over any final judgment of a district court if the district court's jurisdiction was based on 28 U.S.C. § 1338. 28 U.S.C. § 1295(a)(1). Section 1338 in turn provides that the district courts have original, exclusive jurisdiction over cases arising under the Patent Act. *See* 28 U.S.C. § 1338(a).

11.5.1.2 Choice of Law

One of the many complications arising from patent cases stems from this "exclusive" subject-matter jurisdiction. Unlike other cases, patent cases involve inter-circuit choice of law questions because of the Federal Circuit's subject matter, as opposed to regional, appellate jurisdiction. This limited jurisdiction has led the Federal Circuit to create a choice of law jurisprudence reminiscent of the *Erie* doctrine.

Where a question of law relates to the Federal Circuit's exclusive patent law jurisdiction, courts should apply Federal Circuit law. *See Lab. Corp. of Am. Holdings v. Chiron Corp.*, 384 F.3d 1326, 1330 (Fed. Cir. 2004) (regarding the interlocutory appealability of an injunction order). If not, courts should apply the regional circuit's law. Hence, substantive matters like claim construction require the district court to follow Federal Circuit precedent. Procedural matters like whether a party waived an issue by not moving for judgment as a matter of law require the district court to apply its regional circuit's precedent. Difficulties arise when courts face "a procedural issue that is not itself a substantive patent law issue." Federal Circuit law

controls such an issue if "the issue pertains to patent law, if it bears an essential relationship to matters committed to [the Federal Circuit's] exclusive control by statute, or if it clearly implicates the jurisprudential responsibilities of [the Federal Circuit] in a field within its exclusive jurisdiction." *Midwest Indus., Inc. v. Karavan Trailers, Inc.*, 175 F.3d 1356, 1359 (Fed. Cir. 1999) (en banc in relevant part) (internal marks omitted). The Federal Circuit decides whether an issue pertains to patent law on an issue-by-issue basis. *See Mars Inc. v. Kabushiki-Kaisha Nippon Conlux*, 24 F.3d 1368 (Fed. Cir. 1994).

Chart 11.6 presents a sampling of the issues requiring choice-of-law analysis and the Federal Circuit's rationale in deciding which law to apply. In general, if there is a cognizable argument that allowing differences in the procedural law will undermine the uniformity of patent law, the Federal Circuit will hold that its body of precedent controls the outcome.

Chart 11.6
Choice of Law

Issue	Does Federal Circuit Law Govern?/Reasoning
Whether the district court had subject-matter jurisdiction to hear a claim of Japanese patent infringement. *Mars Inc. v. Kabushiki-Kaisha Nippon Conlux*, 24 F.3d 1368 (Fed. Cir. 1994).	Yes "[The issue] is of importance to the development of the patent law and is clearly a matter that falls within the exclusive subject matter responsibility of this court."
Whether a Rule 50(b) motion is necessary to preserve a sufficiency of the evidence motion for JMOL on appeal. *Unitherm Food Sys. v. Swift-Eckrich, Inc.*, 375 F.3d 1341 (Fed. Cir. 2004), *rev'd on other grounds*, 546 U.S. 394 (2006).	No "[W]e decide antitrust issues that do not implicate patent law, including market definition, under the law of the regional circuits,"
Whether an injunction against co-pending patent litigation in another district court is immediately appealable. *Lab. Corp. of Am. Holdings v. Chiron Corp.*, 384 F.3d 1326, 1330 (Fed. Cir. 2004).	Yes "Because of the importance of national uniformity in patent cases, we hold that injunctions arbitrating between co-pending patent declaratory judgment and infringement cases in different district courts are reviewed under the law of the Federal Circuit."

The well-pleaded complaint rule introduces an additional wrinkle to the choice of law analysis. Where the district court's original jurisdiction did not stem from § 1338 because, for example, the plaintiff did not assert a patent claim, the Federal Circuit has no appellate jurisdiction and the district court is instead bound by its regional circuit law. This can arise where the patent case stems from the defen-

dant's counterclaim to a non-patent cause of action. *See*, e.g., *Holmes Group, Inc. v. Vornado Air Circulation Sys., Inc.*, 535 U.S. 826 (2002).

11.5.1.3 Interlocutory Appeals

The Federal Circuit has appellate jurisdiction over any interlocutory appeal from a case based on the district court's original jurisdiction over patent case. 35 U.S.C. § 1292(c)(1). As with other federal courts of appeals, the Federal Circuit has discretion to decline an interlocutory appeal. *See*, e.g., *In re Convertible Rowing Exerciser Patent Litig.*, 903 F.2d 822 (Fed. Cir. 1990).

District courts most frequently encounter the question of interlocutory appealability with respect to claim construction. The Federal Circuit routinely refuses to entertain interlocutory appeals on claim construction orders. *See Nystrom v. TREX Co., Inc.*, 339 F.3d 1347, 1351 (Fed. Cir. 2003) ("Such appeals are rarely granted."). Nevertheless, the Federal Circuit may grant an appeal on a claim construction order if it already has jurisdiction over a prior claim construction order, for example, if a preliminary injunction is already on appeal. *See*, e.g., *Regents of the Univ. of Cal. v. Dako N. Am., Inc.*, 477 F.3d 1355 (Fed. Cir. 2007). The *Nystrom* court identified four case-management options by which the district could enable an appeal of a claim construction order: (1) proceeding to trial with the remaining invalidity and unenforceability counterclaim or otherwise disposing of the issue on the merits; (2) dismissing the pending counterclaim without prejudice; (3) determining whether there is a proper basis for making "an express determination that there is no just reason for delay" and then to expressly direct the entry of final judgment on fewer than all of the claims under Fed. R. Civ. P. 54(b); or (4) certifying that each ruling presented for appeal "involves a controlling question of law as to which there is substantial ground for difference of opinion and that an immediate appeal from the order may materially advance the ultimate termination of the litigation." 28 U.S.C. § 1292(b). *See Nystrom*, 339 F.3d at 1350-51. The court noted that the fourth option is subject to the absolute discretion of the Federal Circuit.

11.5.2 Parallel Litigation Forums

Some patent cases spawn parallel litigation, presenting a host of issues regarding stays and coordination of discovery that was dealt with in prior chapters. A district court should be aware of the potential for parallel litigation and where it might be filed.

11.5.2.1 International Trade Commission

Under 19 U.S.C. § 1337, the U.S. International Trade Commission (ITC) has jurisdiction to bar importation or sale of articles that infringe a valid and enforceable U.S. patent (as well as other federal intellectual property rights). The ITC has become increasingly popular over the past decade due to its relatively fast and inexpensive dispute resolution process. Although it may not award damages, it can issue exclusion orders preventing a defendant from importing infringing goods into the United States. The cases are initially heard by an administrative law judge in an adjudicatory proceeding governed by the Administrative Procedure Act (APA). Such decisions are reviewed by the six-member ITC, that also decides the remedy and public interest issues. The remedy goes into effect unless it is disapproved by the U.S. Trade Representative. The ITC's decisions may be appealed to the Federal Circuit. The typical ITC proceeding is completed in under 18 months. ITC decisions are not binding on district courts, and have no res judicata or collateral estoppel effect. *See Tex. Instruments v. Cypress Semiconductor Corp.*, 90 F.3d 1558, 1569 (Fed. Cir. 1996). Patent actions may proceed simultaneously in district court and in the ITC, especially if the patentee seeks both damages (only available in the district court) and an exclusion order (only available from the ITC). For further discussion regarding whether to issue a stay of district court proceedings while an ITC action is pending, *see* § 2.2.6.2.

11.5.2.2 Patent Office Reexamination

As discussed previously, *see* § 11.2.6.4, litigants can request that the PTO reexamine the validity of issued patents. High-stakes patent litigation often leads to requests for reexamination to invalidate a patent or alter its scope. To avoid duplicative proceedings, district courts may decide to stay the litigation pending reexamination. *See* § 2.2.6.3.

11.5.2.3 Other District Courts and MDL Proceedings

Patent litigation can lead to the proverbial "race to the courthouse," especially where declaratory judgment jurisdiction is available. In other instances, a defendant may choose to file a counter-suit for infringement of its own patents in a different jurisdiction. Lastly, the Judicial Panel on Multidistrict Litigation occasionally consolidates patent cases nationwide before a single judge for pretrial proceedings. *See* <http://www.jpml.uscourts.gov/Pending_MDLs/Intellectual_Property/intellectual_property.html>.

11.5.2.4 Foreign Courts

Complex patent litigation may be occurring simultaneously overseas because each nation operates its own patent system. While many nations have harmonized their patent laws to a significant extent, it is an abuse of discretion for a district judge to take jurisdiction over infringement claims based on other nation's patents. *See Voda v. Cordis Corp.*, 476 F.3d 887 (Fed. Cir. 2007). Indeed, the Federal Circuit's holding that the U.S. district courts cannot consolidate patent infringement claims from multiple countries ensures that parallel litigation will occur over particularly valuable inventions. In such cases, district courts should be sensitive to the potential for strategic effects that certain types of motions (for example, regarding depositions or privileged documents) can create.

Appendix A. Patent Glossary

Note: Many of these definitions are derived from the PTO glossary, available at <http://www.uspto.gov/main/glossary/index.html>.

Abandonment: A patent application becomes abandoned for failure to file a complete and proper reply within the time period provided under 37 C.F.R. § 1.134 and § 1.136 unless an office action indicates otherwise. Abandonment may be either of the invention or of an application. An abandoned application, in accordance with 37 C.F.R. §§ 1.135 and 1.138, is one which is removed from the Office docket of pending applications. *See* § 11.3.4.6.

Abstract of the disclosure: A concise statement of the technical disclosure including that which is new in the art to which the invention pertains.

Agent (practitioner, representative): One who is not an attorney but is authorized to act for or in place of the applicant(s) before the PTO, that is, an individual who is registered to practice before the PTO.

All-limitation rule (all-elements rule): A doctrine requiring that an allegedly infringing device contain every element of a claim in order to establish infringement, either literally or under the doctrine of equivalents. *See* § 11.4.1.4.2.1.1.

Analogous art (pertinent art, relevant art): In a nonobviousness analysis, art that a person having ordinary skill in the art would have consulted in attempting to solve the problem addressed by the innovation. Analogous art must be either within the same field of endeavor as the invention, or from a different field but reasonably pertinent to the same problem. *See* § 11.3.5.3.2.

Antedate (swearing behind a reference): A procedure whereby a patent applicant can establish an invention date earlier than the effective date of prior art that has been cited against his claims in a rejection for nonobviousness (§ 103) or lack of novelty (§§ 102(a) or (e)).

Anticipation: A single prior art reference anticipates a claim when it contains all the elements of the claim. The claim is rejected for lack of novelty under § 102.

Assignment: A transfer of ownership of a patent application or patent from one entity to another. Record all assignments with the PTO Assignment Services Division to maintain clear title to pending patent applications and patents.

Benefit claim: The claiming by an applicant in a non-provisional application of a benefit of an invention disclosed in a prior-filed co-pending (under examination at the same time) provisional or non-provisional application, or international application designating the United States for the purposes of securing an earlier-effective filing date for the non-provisional application.

Best mode: The specification must set forth the best mode, or preferred embodiment, contemplated by the inventor at the time of filing of making and using her invention. (§ 112), or the patent may be declared invalid. *See* § 11.3.3.3.

Blocking patent: Two or more patented inventions block each other when one cannot be practiced without infringing the other, and vice versa. Blocking patents often arise when an improvement on an invention is patented: the improvement cannot be practiced without infringing the original patent, and the original inventor cannot practice the improvement without infringing the improvement patent. The parties commonly agree to a cross-license to resolve the issue.

Central claiming: A claiming regime in which a claim recites the preferred embodiment of the invention but is deemed to cover a range of equivalents to that preferred embodiment.

Claims: Claims delineate the patented invention. The patent specification must conclude with a claim or claims particularly pointing out and distinctly claiming the subject matter which the applicant regards as her invention or discovery.

Classification: Patents are classified by a system using a three digit class and a three digit subclass to describe every similar grouping of patent art. A single invention may be described by multiple classification codes.

Combination patent: A patent granted for an invention that unites existing components in a novel way.

Composed of (used when defining the scope of a claim): A transitional phrase that is interpreted in the same manner as either "consisting of" or "consisting essentially of," depending on the facts of the particular case.

Comprising (used when defining the scope of a claim): A transitional phrase that is synonymous with "including," "containing" or "characterized by;" is inclusive or open-ended and does not exclude additional, unrecited elements or method steps. Comprising is a term of art used in claim language which means that the named elements are essential in describing the invention.

Conception: The formation in the mind of the inventor of the definite and permanent idea of the complete invention that is thereafter reduced to practice.

Consisting essentially of (used when defining the scope of a claim): A transitional phrase that limits the scope of a claim to the specified materials or steps and those that do not materially affect the basic and novel characteristics of the claimed invention. For the purposes of searching for and applying prior art under §§ 102 and 103, absent a clear indication in the specification or claims of what the basic and novel characteristics actually are, "consisting essentially of" will be construed as equivalent to "comprising."

Consisting of (used when defining the scope of a claim): A transitional phrase that is closed and excludes any element, step, or ingredient not specified in the claim.

Continuation: A second application for the same invention claimed in a prior non-provisional application and filed before the first application becomes abandoned or patented.

Continuation-in-part (CIP): An application filed during the lifetime of an earlier non-provisional application that repeats some substantial portion or all of the earlier non-provisional application and adding matter not disclosed in the earlier non-provisional application. *See* § 11.2.4.3.

Counterpart: An application filed in a foreign patent office that is substantially similar to the patent application filed with the PTO and is based upon some or all of the same invention. The two applications would generally have the same applicant.

Critical date: The date one year prior to the date a patent application is filed. The patent will be invalid for lack of novelty if the invention was in public use in the United States, or patented or described anywhere in the world, prior to the critical date. *See* § 102(b); § 11.3.4.5.

Declaration (of Inventor): A document in which an applicant for patent declares, under penalty of fine or imprisonment, or both, that (1) he or she is the original or sole inventor, (2) shall state of what country he or she is a citizen, (3) that he or she has reviewed and understands the contents of the specification and claims which the declaration refers to, and (4) acknowledges the duty to disclose information that is material to patentability as defined by 37 C.F.R. § 1.56. An oath or declaration must be filed in each non-provisional patent application.

Definiteness: Shorthand for the requirement, under § 112 ¶ 2, that the claims particularly point out and distinctly claim the subject matter which the applicant regards as her invention. *See* § 11.3.3.4.

Dependent claim: A claim that refers back to and further limits a preceding dependent or independent claim. A dependent claim includes by reference every limitation of the claim from which it depends.

Design patent: A patent for a new, original, and ornamental design for an article of manufacture.

Designation: A selection made by the applicant, in the Request for an International Application filed under the Patent Cooperation Treaty, as to the countries in which protection for an invention is desired.

Diligence: In order to establish a conception date as the date of invention, the inventor must have worked diligently following conception to reduce the invention to practice. In the course of an interference, a party can establish its conception date as the date of invention by showing reasonable diligence from before the other's conception until their own reduction to practice date. *See* § 102(g); § 11.3.4.2.3.

Disclaimer: There are two types of disclaimers under § 253: statutory disclaimers and terminal disclaimers. A patentee may make a statutory disclaimer of

any complete claim, stating therein the extent of his or her interest in such patent. A patentee may make a terminal disclaimer to disclaim or dedicate to the public the remaining time of the term of the patent granted. A terminal disclaimer may be filed for the purpose of overcoming a judicially created double patenting rejection. Disclaimers are required to be in writing and recorded in the PTO, and are considered as part of the original patent to the extent of the interest actually possessed by the disclaimant and by those claiming under him or her.

Disclosure: In return for a patent, the inventor gives as consideration a complete disclosure of the invention for which protection is sought.

Divisional application: A later application for an independent or distinct invention disclosing and claiming only a portion of the subject matter disclosed in the earlier or parent application.

Doctrine of equivalents: A judicially developed principle for finding patent infringement when the accused process or product falls outside the literal scope of the patent claims. The essential objective inquiry is: "Does the accused product or process contain elements equivalent to each claimed element of the patented invention?" *See* § 11.4.1.4.2.

Double patenting: An inventor may not obtain claims in more than one patent directed either to the same invention or to an obvious variation of the same invention. A rejection by the PTO based on obviousness can be overcome by filing a terminal disclaimer stating that the additional patents will expire on the same date as the first patent. A terminal disclaimer therefore eliminates any improper extension of the initial patent term. *See* § 11.4.2.4.1.

Effective filing date: The filing date of an earlier-filed application accorded under §§ 119 (foreign filing or domestic provisional application), 120 (earlier U.S. filing date), or 121 (divisional applications), or if none of these sections is satisfied, the actual filing date of the patent.

Electronic file wrapper: A system that provides a way to access electronic copies of the correspondence, documents and other pertinent records used in considering a particular patent application.

Element: A discretely claimed component of a patent claim.

Embodiment: A manner in which an invention can be made, used, practiced or expressed. *See* Best mode.

Enablement: The specification must describe in "full, clear, concise, and exact terms" how to make and use the invention such that any person skilled in the art can do so without undue experimentation. *See* § 11.3.3.2.

Ex parte reexamination: *See* § 11.2.6.4.1.

Experimental use: Experimental use has two distinct meanings within patent law. First, experimental use is an exception to the public-use statutory bar under § 102(b). So long as the public use was to test or experiment with the invention, it

is not counted in computing the one-year statutory bar. Second, experimental use is a defense to infringement, and requires that the construction and use of the patented invention be for scientific purposes only. *See* § 11.3.4.5.1.

Express abandonment: *See* Abandonment.

File wrapper: The folder into which papers for a particular application are collected and maintained. It contains a complete record of proceedings in the PTO from the filing of the initial patent application to the issued patent. The file wrapper of a patent application that is maintained by the PTO is the "official record."

File wrapper estoppel: *See* Prosecution history estoppel.

Filing date: The date of receipt in the PTO of an application which includes (1) a specification containing a description and, if the application is a non-provisional application, at least one claim, and (2) any required drawings.

Final office action: A PTO action on the second or any subsequent examination or consideration by an examiner that is intended to close the prosecution of a non-provisional patent application.

Grace period: The one-year period between the critical date and the filing date, during which the invention may be offered for sale or used publicly in the United States, or described in a printed publication or patented anywhere in the world without invalidating the patent under § 102(b).

Handgards claim: An antitrust counterclaim to a patent infringement suit, alleging that the patentee either knew the patent was invalid or was not being infringed. *See Handgards, Inc. v. Ethicon, Inc.*, 601 F.2d 986 (9th Cir. 1979).

Having (used when defining the scope of a claim): A transitional phrase that is synonymous with "including," "containing" or "characterized by;" is inclusive or open-ended and does not exclude additional, unrecited elements or method steps.

Improvement patent: A patent based on an improvement to a pre-existing invention.

Indefiniteness: *See* Definiteness.

Independent claim: A claim that does not refer back to or depend on another claim.

Information disclosure statement (IDS): A list of patents, publications, U.S. applications, or other information submitted for consideration by the PTO in a non-provisional patent application filed under § 111(a) to comply with applicant's duty to submit information which is material to patentability of the claimed invention. *See* § 11.2.3.2.2.

Inter partes reexamination: *See* § 11.2.6.4.2.

Interference: A proceeding, typically conducted before the Board of Patent Appeals and Interferences or in certain circumstances before a district court, to determine priority of invention between a pending application and/or one or more unexpired patents.

Invention: Any art or process, machine, manufacture, design, or composition of matter, or any new and useful improvement thereof, or any variety of plant, which is or may be patentable under the patent laws of the United States.

Invention date: The date either on which an invention is reduced to practice or conceived, so long as the inventor can show reasonable diligence from conception until reduction to practice.

Jepson claim format: A claim containing a preamble explaining the current state of the art, followed by a description of the claimed patentable improvement.

Joint inventor: An inventor who is named with at least one other inventor in a patent application, wherein each inventor contributes to the conception of the invention set forth in at least one claim in a patent application.

Laches: An equitable defense that the plaintiff unreasonably delayed in asserting an infringement claim. If a patentee files suit more than six years after she became (or reasonably should have became) aware of the alleged infringement, a presumption of laches arises and the patentee must establish legitimate reasons for the delay. This defense does not bar the plaintiff's action entirely, but prevents the recovery of any damages accrued prior to the filing of the action. *See* § 11.4.2.3.4.

License: An agreement between a patent owner and a licensee that the patent owner will not sue the licensee for acts that would otherwise constitute infringement.

Limitation: A component of an invention described in a patent claim. *See* Element.

Literal infringement: Literal infringement requires an accused device to satisfy every element of the asserted patent claim precisely. *See* § 11.4.1.4.1.

Markush claim format: A Markush claim claims a genus of inventions in a single claim where the family of inventions all share a common trait, for example, "a chemical compound of the formula $COOH–CH_2$-R, where R is selected from the group consisting of _____." Markush claims normally do not occur outside of the field of chemistry.

Means-plus-function claim format: A means plus function claim defines one or more elements of the claim as a "means for [performing a function]." This special type of limitation is interpreted to cover the structure(s) described in the specification for performing the claimed function as well as equivalents of that/those structure(s) as of the time of filing. *See* § 112, ¶ 6; § 11.1.2.3.1

Method claim: A claim covering a way of doing something, typically conveyed as a series of steps.

Multiple dependent claim: A dependent claim that further limits and refers back in the alternative to more than one preceding independent or dependent claim. Acceptable multiple dependent claims shall refer to preceding claims using the terms "or," "any one of," "one of," "any of," "either." A multiple dependent

claim may not depend on another multiple dependent claim, either directly or indirectly.

National stage application: An application that has entered the national phase of the Patent Cooperation Treaty by the fulfillment of certain requirements in a national patent office. Such an application is filed under § 371 in the United States and is referred to as a "371 application."

New matter: Information in an amendment to a pending patent that departs from the original disclosure. Under § 132, amendments cannot introduce new matter into the disclosure of the invention.

Non-final office action: An office action made by the examiner where the applicant is entitled to reply and request reconsideration or further examination, with or without making an amendment.

Nonobviousness: The requirement that in order to be patentable, an invention be sufficiently different from the prior art that, at the time it was made, it would not have been obvious to a person having ordinary skill in the art. *See* § 11.3.5.

Non-patent literature: Documents and publications that are not patents or published patent applications but are cited as references for being relevant in a patent prosecution. For example, a magazine article or doctoral thesis relevant to a claimed invention might be cited as non-patent literature. Typically, references cited in an application are grouped into: domestic patents and patent application publications, foreign patents, and non-patent literature.

Non-provisional application: The "regular" type of patent applications, as distinct from provisional applications filed under § 111(b), often referred to simply as "applications." *See* § 11.2.3.2.1.

Non-responsive amendment: An amendment filed by the applicant that does not fully respond to the examiner's office action in accordance with 37 C.F.R. § 1.111.

Normal publication: Regular 18-month publication or redacted publication of a non-provisional application.

Notice of allowance: A notification to the applicant that she is entitled to a patent under the law and requesting payment of a specified issue fee (and possibly a publication fee as well) within three months (non-extendable) from the mailing date of the notice of allowance.

Notice of references cited (also known as a PTO-892 form): A list of relevant references cited by a patent examiner in an office action. The following are some examples of such references: domestic patents, domestic patent application publications, foreign patents or patent publications, publications, electronic documents, and affidavits.

Notice: The practice of marking a patented article with the words "patent" followed by the patent number. Without notice, the patentee may recover only for damages that occurred after the infringer received a charge of patent infringement.

Novelty: The requirement under § 102 that an invention be sufficiently new relative to the prior art. *See* § 11.3.4

Oath: *See* Declaration (of Inventor).

Obviousness: *See* Non-obviousness.

Opposition: A procedure allowing a third party to request a patent application's refusal or an issued patent's annulment.

Original application: "Original" is used in the patent statute and rules to refer to an application which is not a reissue application. An original application may be a first filing or a continuing application.

Parent application: The term "parent" is applied to an earlier application of the inventor disclosing a given invention.

Patent Cooperation Treaty (PCT): A mechanism by which an applicant can file a single application that, when certain requirements have been fulfilled, is equivalent to a regular national filing in each designated country. There are currently over 130 PCT Contracting States.

Patent pending: A phrase that often appears on manufactured items. It means that someone has applied for a patent on an invention that is contained in the manufactured item. It serves as a warning that a patent may issue that would cover the item and that copiers should be careful because they might infringe if the patent issues. Once the patent issues, the patent owner will stop using the phrase "patent pending" and start using a phrase such as "covered by U.S. Patent Number XXXXXXX."

Patent term: The period of time during which a patent is enforceable. For patent applications filed after June 8, 1995, the expiration date is 20 years from the earliest effective filing date, subject to various extensions for delays occurring during prosecution and regulatory approval for drug-related patents. *See* § 11.2.5.

Patent: A property right granted by the government of the United States to an inventor "to exclude others from making, using, offering for sale, or selling the invention throughout the United States or importing the invention into the United States" for a limited time in exchange for public disclosure of the invention.

Peripheral claiming: A regime in which an applicant delineates the precise boundaries of the claimed area of exclusivity, in contrast to central claiming in which the applicant defines the claim directly.

Person having ordinary skill in the art (PHOSITA): A hypothetical person with knowledge of all analogous art from whose perspective nonobviousness, writ-

ten description, and enablement are analyzed. *See* §§ 103, 112; *see also* §§ 11.3.3, 11.3.5.3.1.

Person: For purposes of small entity determination, a person is defined as any inventor or other individual (e.g., an individual to whom an inventor has transferred some rights in the invention) who has not assigned, granted conveyed, or licensed, and is under no obligation under contract or law to assign, grant, convey, or license any rights in the invention.

Petition to make special (PTMS): An applicant may petition the PTO to examine her application ahead of other pending applications. A petition to make special may be granted on the basis of an inventor's age or poor health, that the patent will enable manufacture of the invention, is presently being infringed, relates to certain fields including superconductivity, HIV/AIDS, and counterterrorism, or several other reasons.

Preferred embodiment: How the inventor sets forth the best mode for carrying out the claimed invention in the application.

Prior art: The general category of technologies and events against which novelty and nonobviousness are evaluated. What qualifies as prior art is specified in §§ 102 and 103.

Priority claim: Claims under §§ 119(a)-(e) and 120 for the benefit of the filing date of earlier filed applications.

Pro se: Used to designate an independent inventor who has elected to file an application by herself without the services of a licensed representative.

Prosecution history estoppel: A doctrine that prevents a patentee from obtaining coverage through the doctrine of equivalents over subject matter which was surrendered during prosecution. *See* § 11.4.1.4.2.1.2.

Prosecution: The process for applying for and obtaining a patent from the PTO.

Provisional application: A provisional application for patent is a U.S. national application for patent filed in the PTO under § 111(b), which allows filing without a formal patent claim, oath or declaration, or any information disclosure (prior art) statement. A provisional application can establish an early effective filing date in a non-provisional patent application filed under § 111(a) and automatically becomes abandoned after one year. It also allows the term "Patent Pending" to be applied. *See* § 11.2.3.2.

Reads on: An accused device, manufacture, composition, or process "reads on" (and hence infringes) a patent claim if it embodies each of the claim limitations. Similarly, a patent claim "reads on" a prior art reference (and hence is invalid) if the prior art reference contains each of the claim limitations.

Record copy: Original copy of an international application filed under the Patent Cooperation Treaty maintained by the International Bureau of the World Intellectual Property Organization.

Redacted publication: A patent application publication that omits material that was present in the specification or claims of the non-provisional patent application filed in the PTO. *See* 37 C.F.R. § 1.217 and M.P.E.P. § 1132.

Reduction to practice: Following conception, reduction to practice is the final step in the inventive process. Reduction to practice can be actual – by constructing a physical embodiment of the invention, or constructive – by filing a patent application which satisfies the disclosure requirements of § 112. *See* § 11.3.4.2.2

Reexamination proceeding: At any time during the enforceability of a patent, any person may file a request for the PTO to conduct a second examination of any claim of the patent on the basis of prior art patents or printed publications which that person states to be pertinent and applicable to the patent and believes to have a bearing on the patentability (see 37 C.F.R. § 1.501). In order for the request for reexamination to be granted, a substantial new question of patentability must be present with regard to at least one patent claim. The request must be in writing and must be accompanied by payment of a reexamination request filing fee as set forth in 37 C.F.R. § 1.20(c). *See* § 11.2.6.4.

Reference: *See* Prior art.

Reissue application: An application for a patent to take the place of an unexpired patent that is defective in one or more particulars.

Rejoinder: The returning to active consideration of claims previously withdrawn from consideration to due to a restriction requirement – i.e., a determination by the PTO that an application contains more than one invention.

Request for continued examination (RCE): A request filed in an application in which prosecution is closed (e.g., the application is under final rejection or a notice of allowance) that is filed to reopen prosecution and continue examination of the application.

Restriction: If two or more independent and distinct inventions are claimed in a single application, the examiner may require the applicant to elect a single invention to which the claims will be restricted. This requirement is known as a requirement for restriction (also known as a requirement for division). Such requirement will normally be made before any action on the merits; however, it may be made at any time before final action (final rejection).

Reverse doctrine of equivalents: A doctrine excusing infringement where an accused device literally infringes a patent, but should nonetheless be excused because it substantially differs in operative principle and results. Although it has not been applied in over a century to excuse infringement, it continues to be raised. *See* § 11.4.1.4.3.

Specification: A written description of the invention and the manner and process of making and using the same.

Statutory disclaimer: *See* disclaimer.

Submarine patent: An informal term for a patent that is intentionally delayed in prosecution by the applicant in order to let an infringing user continue to develop its business, with the intention of claiming later-invented technology once the patent finally "surfaces" from the PTO. As of November 29, 2000, most patent applications must be published within 18 months of filing, so submarine patents are relatively have become less common.

Substitute patent application: An application which is in essence a duplicate of a prior application by the same applicant abandoned before the filing of the substitute application. A substitute application does not obtain the benefit of the filing date of the prior application.

Terminal disclaimer: *See* Disclaimer.

Utility: In order to be patentable, an invention must have specific, substantial, and credible utility. *See* § 11.3.2.

Walker process claim: An antitrust counterclaim to a patent infringement suit, alleging that the patent was fraudulently obtained so as to exert monopolistic power and is therefore invalid. *See Walker Process Equip., Inc. v. Food Mach. & Chem. Corp.*, 382 U.S. 172 (1965).

Written description: The portion of a patent specification, as required by § 112 ¶ 1, describing the background of the invention, a summary of the invention, and a detailed description of the invention. The patentee must convey with reasonably clarity to those skilled in the art that, as of the filing date sought, he or she was in possession of the invention, and the written description must enable a person having ordinary skill in the art to practice the invention without undue experimentation. *See* § 11.3.3.1.

Appendix B. Acronyms

AILPA: American Intellectual Property Law Association
AIPA: American Inventors Protection Act of 1999
AU: (Group) Art Unit
BPAI: Board of Patent Appeals and Interferences
CIP: Continuation-in-Part
CPA: Continued Prosecution Application
CRU: Central Reexamination Unit
DOE: Doctrine of Equivalents
EAST: Examiner Automated Search Tools
EFD: Effective filing date
EFS: Electronic Filing System
ePAS: Electronic Patent Assignment System
EPO: European Patent Office
ESD: Examination Support Document
GAU: Group Art Unit
IDS: Information disclosure statement
IT: Information Technology
ITC: United States International Trade Commission
MPEP: Manual of Patent Examining Procedure
NOA: Notice of allowance
NPL: Non patent literature
OG: Official Gazette
OIPE: Office of Initial Patent Examination
PAIR: Patent Application Information Retrieval
PCT: Patent Cooperation Treaty
PLR: Patent Local Rules
PTA: Patent Term Adjustment
PTE: Patent Term Extension
PTO: Patent and Trademark Office
RCE: Request for continued examination
TD: Terminal disclaimer
USPTO: United States Patent and Trademark Office

Appendix C. Patent Resources

Organizations

American Intellectual Property Law Asssociation
http://www.aipla.org/

ABA Section of Intellectual Property Law
www.abanet.org/intelprop

Intellectual Property Owners Association
www.ipo.org

Federal Circuit Bar Association
http://www.fedcirbar.org/olc/pub/LVFC/

Online resources

PatentlyO—"The nation's leading patent law blog"
http://www.patentlyo.com/

Orange Book Blog—"At the Intersection of Patent and FDA Law"
http://www.orangebookblog.typepad.com/

Promote the Progress—"The patent education portal"
http://promotetheprogress.com/

http://www.google.com/patents
http://patft.uspto.gov/

PTO full-text and full-page image patent databases
Manual of Patent Examining Procedure (MPEP)
http://www.uspto.gov/web/offices/pac/mpep/mpep.htm

Publications

Chisum on Patents: A Treatise on the Law of Patentability, Validity, and Infringement
Donald S. Chisum. New York : LEXIS Pub., 1978-

Moy's Walker on Patents
4th ed., Thomson West

Patent Law: A Practitioner's Guide 2d ed.
Ronald B. Hildreth. New York: Practising Law Institute, c1993.

Modern Patent Law Precedent: Dictionary of Key Terms and Concepts 3d ed.
Irwin M. Aisenberg. Little Falls, N.J.: Glasser LegalWorks, c1997.

Federal Circuit Bar Journal
http://www.law.gmu.edu/fcbj/

Anatomy of a Patent Case
George Pappas, American College of Trial Lawyers
Federal Judicial Center 2009, 154 pp.

Civil Litigation Management Manual
2001, 463 pp.

This manual provides trial judges with a guide to managing civil cases. It sets out a wide array of case-management techniques, beginning with case filing and concluding with steps for streamlining trials, and it discusses a number of special topics, including pro se and high-visibility cases, the role of staff, and automation that supports case management. The manual, which was produced in response to the Civil Justice Reform Act of 1990, is based on the experiences of federal district and magistrate judges and reflects techniques they have developed. It was prepared under the direction of the Judicial Conference Committee on Court Administration and Case Management, with substantial contributions from the Administrative Office of the U.S. Courts and the Federal Judicial Center, and was approved by the Judicial Conference in March 2001.

Effective Use of Courtroom Technology: A Judge's Guide to Pretrial and Trial
Federal Judicial Center 2001, 358 pp.

This publication is the result of joint project between the Federal Judicial Center and the National Institute for Trial Advocacy. It describes the substantive and procedural considerations that may arise when lawyers bring electronic equipment to the courtroom or use court-provided equipment for displaying or playing evidentiary exhibits or illustrative aids during trial. It draws upon the expertise of judges who work in courtrooms equipped with technology, law professors who teach trial advocacy and evidence, and practitioners who have trial experience using technology in civil and criminal cases. It collects practical experience and expert judgments, but does not purport to test these observations empirically or analyze case law. Although various forms of courtroom technology have been around since the 1970s, and model courtrooms equipped with technology began appearing in law schools in 1990, little scientific research has been done in the field and relatively little case law exists.

The Elements of Case Management: A Pocket Guide for Judges, Second Edition
William W Schwarzer & Alan Hirsch
Federal Judicial Center 2006, 22 pp.

This is a primer for judges on techniques and methods of case management.

Managing Discovery of Electronic Information: A Pocket Guide for Judges
Barbara J. Rothstein, Ronald J. Hedges & Elizabeth C. Wiggins
Federal Judicial Center 2007, 26 pages

This pocket guide helps federal judges manage the discovery of electronically stored information (ESI). It covers issues unique to the discovery of ESI, including its scope, the allocation of costs, the form of production, the waiver of privilege and work product protection, and the preservation of data and spoliation.

Manual for Complex Litigation, Fourth Edition
2004, 798 pp.

This manual describes approaches that trial judges have found useful in managing complex cases. This edition updates the treatment of electronic discovery and other aspects of pretrial management and describes major changes in the substantive and procedural law affecting case management in mass tort, class action, intellectual property, employment discrimination, and other types of litigation. A new chapter deals with managing scientific evidence.

Patent Claim Construction: A Survey of Federal District Court Judges
Rebecca N. Eyre, Joe S. Cecil & Eric Topor
Federal Judicial Center 2008, 32 pp.

This report presents the results of a survey of federal district court judges regarding their use of patent litigation case management and claim construction procedures. When applicable, the report also compares these judges' reported practices with the recommendations contained in four recent sources. In general, surveyed judges' reported practices are consistent with the sources' recommendations, and judges who are relatively more experienced with patent litigation and claim construction tended to give similar answers to those given by judges less experienced in these areas.

Patent Law and Practice, Sixth Edition
Herbert F. Schwartz & Robert J. Goldman
BNA 2008, 380 pp. (free to the judiciary via FJC Online at http://cwn.fjc.dcn)

Patent Law and Practice, Sixth Edition, has been updated to reflect changes in patent law since the last edition. It covers the Federal Circuit response to recent Supreme Court decisions, as well as the Federal Circuit's continued evolution of the law relating to claim construction, invalidity for anticipation, the statutory disclosure and claiming requirements, indirect infringement, infringement under the doctrine of equivalents, and the defense of inequitable conduct.

Video

An Introduction to the Patent System
Federal Judicial Center 2002
4342-V/02 (one DVD) (17 minutes) (sample patent) (available for download in QuickTime, Real Player, and Windows Media Player from FJC Online at http://cwn.fjc.dcn and on the WorldWideWeb at http//www.fjc.gov)

This 17-minute video is designed to be shown to jurors in patent jury trials. It contains important background information intended to help jurors understand what patents are, why they are needed, how inventors get them, the role of the Patent and Trademark Office, and why disputes over patents arise.

An Introduction to the Patent System was developed with the assistance of an advisory committee of district judges and patent attorneys. Special care was taken to ensure that it provides an impartial and objective view of the patent process. It is, however, up to the individual trial judge to decide whether or not to use this video in patent jury trials. The Center is simply making it available as a resource.

Judges who decide to use the video may wish to incorporate it into their preliminary instructions to the jury. When used in this manner, it may eliminate the need for the parties to call expert witnesses at trial to explain patent basics to the jury.

Appendix D. Patent Local Rules and Chambers-Specific Standing Orders

General Patent Local Rules

Fed. Cir.	http://www.fedcir.gov/pdf/rules.pdf
N.D. Cal.	http://www.cand.uscourts.gov/cand/LocalRul.nsf/fec20e529a5572f0882569b6006607e0/5e313c0b7e4cd680882573e20062dbcf?OpenDocument
S.D. Cal.	http://www.casd.uscourts.gov/uploads/Rules/Local%20Rules/LocalRules.pdf
N.D. Ga.	http://www.gand.uscourts.gov/pdf/NDGARulesPatent.pdf
E.D. Mo.	http://www.moed.uscourts.gov/judges/cas.html (Judge Charles Shaw)
E.D. N.C.	http://www.nced.uscourts.gov/flashhtml/LocalRules/NCED-Local_Rules.htm
D. N.J.	http://www.njd.uscourts.gov/LocalRules.html
W.D. Pa.	http://www.pawd.uscourts.gov/Documents/Forms/lrmanual.pdf
E.D. Tex.	http://www.txed.uscourts.gov/Rules/LocalRules/Documents/Appendix%20M.pdf
S.D. Tex.	http://www.txsd.uscourts.gov/district/rulesproc/patent.htm
W.D. Wash.	http://www.wawd.uscourts.gov/ReferenceMaterials/SupplementalPatentRules.htm

Partial patent local rules and court standing orders

N.D. Ala.	Allows designation of a Magistrate Judge as a Special Master in patent cases. http://www.alnd.uscourts.gov/Local/local_rules.htm
E.D. Cal.	Imposes additional pretrial statement requirements in patent cases. http://www.caed.uscourts.gov/caed/DOCUMENTS/localRules/LocalRules.pdf
D. Del.	Copies of the patent must be attached to the complaint and filed with the Clerk. http://www.ded.uscourts.gov/forms/Local%20Rules.pdf
	Establishes a Special Master Panel for patent cases. http://www.ded.uscourts.gov/StandingOrders/StandingOrder-6.htm
N.D Ill.	Party must file a notice of patents with the court. http://www.ilnd.uscourts.gov/home/LocalRules.aspx?rtab=localrule#

S.D. Ill.	Presumptive trial date for patent cases is fifteen to eighteen months after the defendant's first appearance or default date, whichever occurs first. http://www.ilsd.uscourts.gov/Forms/Local_Rules_Rev6R.pdf
D, Kan.	Sets discovery period in patent cases at eight months. http://www.ksd.uscourts.gov/rules/LocalRules06.pdf
D. Mass.	Scheduling and procedures for patent cases. http://www.mad.uscourts.gov/general/pdf/PubNotice-NewPatent-LR16.6_000.pdf
N.D.N.Y.	Only one expert witness allowed for each side, unless leave of court is granted. http://www.nynd.uscourts.gov/documents/lr2006.pdf
D. Minn.	Requires use of a special form for patent cases following the initial pretrial conference, and parties to confer as to jury instructions at the final pretrial conference. http://www.mnd.uscourts.gov/local_rules/pdfdoc/local_rules.pdf
W.D. Okla.	Imposes additional requirements for patent cases referred to settlement and ADR. http://www.okwd.uscourts.gov/files/genorders/genord98-3.pdf
E.D. Okla.	Complaint must cite the patent number asserted. http://www.oked.uscourts.gov/WEB%20DOCS/Rules&GOs/Local_Civil_Rules.pdf
N.D. Okla.	Complaint must cite the patent number asserted. http://www.oknd.uscourts.gov/legal/generalo.nsf/0A0713F3B13A3660862570360013F310/$file/final%20rules%202005.pdf
D. Or.	Complaint must state the patent number, owner's full name, and date of issuance. http://ord.uscourts.gov/Rules/2006/AppendixofForms/Compiled062006.pdf
W.D. Va. 16(b)	Patent cases are exempt from the planning and scheduling requirement of Fed. R. Civ. P. http://www.vawd.uscourts.gov/storders/ptrule16.htm

Judge's Standing Orders

N.D. Cal.	Armstrong	Rules for claim construction hearings, case management report, and pretrial preparation. http://www.cand.uscourts.gov/cand/judges.nsf/f15a2e7269ab42de88256d48005fd21f?OpenView
N.D. Cal.	Hamilton	Rules for claim construction hearing and case management report. http://www.cand.uscourts.gov/cand/judges.nsf/412014cefd83d05588256d48005fd224?OpenView
N.D. Cal.	White	Rules for claim construction hearing and case management report. http://www.cand.uscourts.gov/cand/judges.nsf/f439a7615af0ad8188256d48005fd22b?OpenView

D. Mass.	Tauro	A courtesy copy of claim construction briefings must be filed with the Clerk http://www.mad.uscourts.gov/boston/pdf/TauroStandingOrder.pdf
D. Mass.	Stearns	Paper copies of electronic documents related to Markman filings must be submitted to the court. http://www.mad.uscourts.gov/boston/pdf/stearns/RGS_SchedulingOrderPatent.pdf

Northern District of California (2008)

Patent Local Rules

TABLE OF CONTENTS
PATENT LOCAL RULES

Page

1. SCOPE OF RULES. . . . . PAT 2
1-1. Title.. . . . . PAT 2
1-2. Scope and Construction.. . . . . PAT 2
1-3. Modification of these Rules.. . . . . PAT 2
1-4. Effective Date.. . . . . PAT 2

2. GENERAL PROVISIONS.. . . . . PAT 3
2-1. Governing Procedure.. . . . . PAT 3
(a) Initial Case Management Conference. . . . . PAT 3
2-2. Confidentiality.. . . . . PAT 3
2-3. Certification of Disclosures.. . . . . PAT 3
2-4. Admissibility of Disclosures... . . . . PAT 4
2-5. Relationship to Federal Rules of Civil Procedure.. . . . . PAT 4

3. PATENT DISCLOSURES.. . . . . PAT 5
3-1. Disclosure of Asserted Claims and Infringement Contentions.. PAT 5
3-2. Document Production Accompanying Disclosure.. . . . . PAT 6
3-3. Invalidity Contentions.. . . . . PAT 6
3-4. Document Production Accompanying Invalidity Contentions... PAT 7
3-5. Disclosure Requirement in Patent Cases for Declaratory Judgment of Invalidity.. . . . . PAT 8
(a) Invalidity Contentions If No Claim of Infringement.. . . . PAT 8
(b) Inapplicability of Rule.. . . . . PAT 8
3-6. Amendment to Contentions.. . . . . PAT 8
3-7. Advice of Counsel. . . . . PAT 8

4. CLAIM CONSTRUCTION PROCEEDINGS.. . . . . PAT 10
4-1. Exchange of Proposed Terms for Construction... . . . . PAT 10
4-2. Exchange of Preliminary Claim Constructions and Extrinsic Evidence. . . . . PAT 10
4-3. Joint Claim Construction and Prehearing Statement... . . . . PAT 11
4-4. Completion of Claim Construction Discovery.. . . . . PAT 11
4-5. Claim Construction Briefs.. . . . . PAT 12
4-6. Claim Construction Hearing. . . . . PAT 12
4-7. Good Faith Participation. . . . . PAT 12

PATENT LOCAL RULES

1. SCOPE OF RULES

1-1. Title.

These are the Local Rules of Practice for Patent Cases before the United States District Court for the Northern District of California. They should be cited as "Patent L.R. __."

1-2. Scope and Construction.

These rules apply to all civil actions filed in or transferred to this Court which allege infringement of a utility patent in a complaint, counterclaim, cross-claim or third party claim, or which seek a declaratory judgment that a utility patent is not infringed, is invalid or is unenforceable. The Civil Local Rules of this Court shall also apply to such actions, except to the extent that they are inconsistent with these Patent Local Rules. If the filings or actions in a case do not trigger the application of these Patent Local Rules under the terms set forth herein, the parties shall, as soon as such circumstances become known, meet and confer for the purpose of agreeing on the application of these Patent Local Rules to the case and promptly report the results of the meet and confer to the Court.

1-3. Modification of these Rules.

The Court may modify the obligations or deadlines set forth in these Patent Local Rules based on the circumstances of any particular case, including, without limitation, the simplicity or complexity of the case as shown by the patents, claims, products, or parties involved. Such modifications shall, in most cases, be made at the initial case management conference, but may be made at other times upon a showing of good cause. In advance of submission of any request for a modification, the parties shall meet and confer for purposes of reaching an agreement, if possible, upon any modification.

1-4. Effective Date.

These Patent Local Rules take effect on March 1, 2008. They govern patent cases filed on or after that date. For actions pending prior to March 1, 2008, the provisions of the Patent Local Rules that were in effect on February 29, 2008, shall apply.

Patent Local Rules

2. GENERAL PROVISIONS

2-1. Governing Procedure.

i.

(a) Initial Case Management Conference. When the parties confer pursuant to FRCivP 26(f), in addition to the matters covered by FRCivP 26, the parties shall discuss and address in the Case Management Statement filed pursuant to FRCivP 26(f) and Civil L.R. 16-9, the following topics:

(1) Proposed modification of the obligations or deadlines set forth in these Patent Local Rules to ensure that they are suitable for the circumstances of the particular case (see Patent L.R. 1-3);

(2) The scope and timing of any claim construction discovery including disclosure of and discovery from any expert witness permitted by the court.;

(3) The format of the Claim Construction Hearing, including whether the Court will hear live testimony, the order of presentation, and the estimated length of the hearing; and

(4) How the parties intend to educate the court on the technology at issue.

2-2. Confidentiality.

Discovery cannot be withheld on the basis of confidentiality absent Court order. The Protective Order authorized by the Northern District of California shall govern discovery unless the Court enters a different protective order. The approved Protective Order can be found on the Court's website.

2-3. Certification of Disclosures.

All statements, disclosures, or charts filed or served in accordance with these Patent Local Rules shall be dated and signed by counsel of record. Counsel's signature shall constitute a certification that to the best of his or her knowledge, information, and belief, formed after an inquiry that is reasonable under the circumstances, the information contained in the statement, disclosure, or chart is complete and correct at the time it is made.

2-4. Admissibility of Disclosures.

Statements, disclosures, or charts governed by these Patent Local Rules are admissible to the extent permitted by the Federal Rules of Evidence or Procedure. However, the statements and disclosures provided for in Patent L.R. 4-1 and 4-2 are not admissible for any purpose other than in connection with motions seeking an extension or modification of the time periods within which actions contemplated by these Patent Local Rules shall be taken.

2-5. Relationship to Federal Rules of Civil Procedure.

Except as provided in this paragraph or as otherwise ordered, it shall not be a ground for objecting to an opposing party's discovery request (e.g., interrogatory, document request, request for admission, deposition question) or declining to provide information otherwise required to be disclosed pursuant to FRCivP 26(a)(1) that the discovery request or disclosure requirement is premature in light of, or otherwise conflicts with, these Patent Local Rules, absent other legitimate objection. A party may object, however, to responding to the following categories of discovery requests (or decline to provide information in its initial disclosures under FRCivP 26(a)(1)) on the ground that they are premature in light of the timetable provided in the Patent Local Rules:

(a) Requests seeking to elicit a party's claim construction position;

(b) Requests seeking to elicit from the patent claimant a comparison of the asserted claims and the accused apparatus, product, device, process, method, act, or other instrumentality;

(c) Requests seeking to elicit from an accused infringer a comparison of the asserted claims and the prior art; and

(d) Requests seeking to elicit from an accused infringer the identification of any advice of counsel, and related documents.

Where a party properly objects to a discovery request (or declines to provide information in its initial disclosures under FRCivP 26(a)(1)) as set forth above, that party shall provide the requested information on the date on which it is required to be provided to an opposing party under these Patent Local Rules or as set by the Court, unless there exists another legitimate ground for objection.

Patent Local Rules

3. PATENT DISCLOSURES

3-1. Disclosure of Asserted Claims and Infringement Contentions.

Not later than 10 days after the Initial Case Management Conference, a party claiming patent infringement shall serve on all parties a "Disclosure of Asserted Claims and Infringement Contentions." Separately for each opposing party, the "Disclosure of Asserted Claims and Infringement Contentions" shall contain the following information:

(a) Each claim of each patent in suit that is allegedly infringed by each opposing party, including for each claim the applicable statutory subsections of 35 U.S.C. §271 asserted;

(b) Separately for each asserted claim, each accused apparatus, product, device, process, method, act, or other instrumentality ("Accused Instrumentality") of each opposing party of which the party is aware. This identification shall be as specific as possible. Each product, device, and apparatus shall be identified by name or model number, if known. Each method or process shall be identified by name, if known, or by any product, device, or apparatus which, when used, allegedly results in the practice of the claimed method or process;

(c) A chart identifying specifically where each limitation of each asserted claim is found within each Accused Instrumentality, including for each limitation that such party contends is governed by 35 U.S.C. § 112(6), the identity of the structure(s), act(s), or material(s) in the Accused Instrumentality that performs the claimed function.

(d) For each claim which is alleged to have been indirectly infringed, an identification of any direct infringement and a description of the acts of the alleged indirect infringer that contribute to or are inducing that direct infringement. Insofar as alleged direct infringement is based on joint acts of multiple parties, the role of each such party in the direct infringement must be described.

(e) Whether each limitation of each asserted claim is alleged to be literally present or present under the doctrine of equivalents in the Accused Instrumentality;

(f) For any patent that claims priority to an earlier application, the priority date to which each asserted claim allegedly is entitled; and

(g) If a party claiming patent infringement wishes to preserve the right to rely, for any purpose, on the assertion that its own apparatus, product, device, process, method, act, or other instrumentality practices the claimed invention, the party shall identify, separately for each asserted claim, each such apparatus, product, device, process, method, act, or other instrumentality that incorporates or reflects that particular claim.

(h) If a party claiming patent infringement alleges willful infringement, the basis for such allegation.

3-2. Document Production Accompanying Disclosure.

With the "Disclosure of Asserted Claims and Infringement Contentions," the party claiming patent infringement shall produce to each opposing party or make available for inspection and copying:

(a) Documents (e.g., contracts, purchase orders, invoices, advertisements, marketing materials, offer letters, beta site testing agreements, and third party or joint development agreements) sufficient to evidence each discussion with, disclosure to, or other manner of providing to a third party, or sale of or offer to sell, or any public use of, the claimed invention prior to the date of application for the patent in suit. A party's production of a document as required herein shall not constitute an admission that such document evidences or is prior art under 35 U.S.C. § 102;

(b) All documents evidencing the conception, reduction to practice, design, and development of each claimed invention, which were created on or before the date of application for the patent in suit or the priority date identified pursuant to Patent L.R. 3-1(f), whichever is earlier;

(c) A copy of the file history for each patent in suit; and

(**d**) All documents evidencing ownership of the patent rights by the party asserting patent infringement.

(**e**) If a party identifies instrumentalities pursuant to Patent L.R. 3-1(g), documents sufficient to show the operation of any aspects or elements of such instrumentalities the patent claimant relies upon as embodying any asserted claims.

The producing party shall separately identify by production number which documents correspond to each category.

3-3. Invalidity Contentions.

Not later than 45 days after service upon it of the "Disclosure of Asserted Claims and Infringement Contentions," each party opposing a claim of patent infringement, shall serve on all parties its "Invalidity Contentions" which shall contain the following information:

(a) The identity of each item of prior art that allegedly anticipates each asserted claim or renders it obvious. Each prior art patent shall be identified by its number, country of origin, and date of issue. Each prior art publication shall be identified by its title, date of publication, and where feasible, author and publisher. Prior art under 35 U.S.C. § 102(b) shall be identified by specifying the item offered for sale or publicly used or known, the date the offer or use took place or the information became known, and the identity of the person or entity which made the use or which made and received the offer, or the person or entity which made the information known or to whom it was made known. Prior art under 35 U.S.C. § 102(f) shall be identified by providing the name of the person(s) from whom and the circumstances under which the invention or any part of it was derived. Prior art under 35 U.S.C. § 102(g) shall be identified by providing the identities of the person(s) or entities involved in and the circumstances surrounding the making of the invention before the patent applicant(s);

(b) Whether each item of prior art anticipates each asserted claim or renders it obvious. If obviousness is alleged, an explanation of why the prior art renders the asserted claim obvious, including an identification of any combinations of prior art showing obviousness;

(c) A chart identifying where specifically in each alleged item of prior art each limitation of each asserted claim is found, including for each limitation that such party contends is governed by 35 U.S.C. § 112(6), the identity of the structure(s), act(s), or material(s) in each item of prior art that performs the claimed function; and

(d) Any grounds of invalidity based on 35 U.S.C. § 101, indefiniteness under 35 U.S.C. § 112(2) or enablement or written description under 35 U.S.C. § 112(1) of any of the asserted claims.

3-4. Document Production Accompanying Invalidity Contentions.

With the "Invalidity Contentions," the party opposing a claim of patent infringement shall produce or make available for inspection and copying:

(a) Source code, specifications, schematics, flow charts, artwork, formulas, or other documentation sufficient to show the operation of any aspects or elements of an Accused Instrumentality identified by the patent claimant in its Patent L.R. 3-1(c) chart; and

(b) A copy or sample of the prior art identified pursuant to Patent L.R. 3-3(a) which does not appear in the file history of the patent(s) at issue. To the extent any such item is not in English, an English translation of the portion(s) relied upon shall be produced.

The producing party shall separately identify by production number which documents correspond to each category.

3-5. Disclosure Requirement in Patent Cases for Declaratory Judgment of Invalidity.

(a) Invalidity Contentions If No Claim of Infringement. In all cases in which a party files a complaint or other pleading seeking a declaratory judgment that a patent is invalid Patent L.R. 3-1 and 3-2 shall not apply unless and until a claim for patent infringement is made by a party. If the defendant does not assert a claim for patent infringement in its answer to the complaint, no later than 10 days after the defendant serves its answer, or 10 days after the Initial Case Management Conference, whichever is later, the party seeking a declaratory judgment of invalidity shall serve upon each opposing party its Invalidity Contentions that conform to Patent L.R. 3-3 and produce or make available for inspection and copying the documents described in Patent L.R. 3-4.

(b) Inapplicability of Rule. This Patent L.R. 3-5 shall not apply to cases in which a request for a declaratory judgment that a patent is invalid is filed in response to a complaint for infringement of the same patent.

3-6. Amendment to Contentions.

Amendment of the Infringement Contentions or the Invalidity Contentions may be made only by order of the Court upon a timely showing of good cause. Non-exhaustive examples of circumstances that may, absent undue prejudice to the non-moving party, support a finding of good cause include: (a) a claim construction by the Court different from that proposed by the party seeking amendment; (b) recent discovery of material, prior art despite earlier diligent search; and (c) recent discovery of nonpublic information about the Accused Instrumentality which was not discovered, despite diligent efforts, before the service of the Infringement Contentions. The duty to supplement discovery responses does not excuse the need to obtain leave of court to amend contentions.

3-7. Advice of Counsel.

Not later than 50 days after service by the Court of its Claim Construction Ruling, each party relying upon advice of counsel as part of a patent-related claim or defense for any reason shall:

(a) Produce or make available for inspection and copying any written advice and documents related thereto for which the attorney-client and work product protection have been waived;

(b) Provide a written summary of any oral advice and produce or make available for inspection and copying that summary and documents related thereto for which the attorney-client and work product protection have been waived; and

Patent Local Rules

(c) Serve a privilege log identifying any other documents, except those authored by counsel acting solely as trial counsel, relating to the subject matter of the advice which the party is withholding on the grounds of attorney-client privilege or work product protection.

A party who does not comply with the requirements of this Patent L.R. 3-7 shall not be permitted to rely on advice of counsel for any purpose absent a stipulation of all parties or by order of the Court

4. CLAIM CONSTRUCTION PROCEEDINGS

4-1. Exchange of Proposed Terms for Construction.

(a) Not later than 10 days after service of the "Invalidity Contentions" pursuant to Patent L.R. 3-3, not later than 45 days after service upon it of the "Disclosure of Asserted Claims and Infringement Contentions" in those actions where validity is not at issue (and Patent L.R. 3-3 does not apply), or, in all cases in which a party files a complaint or other pleading seeking a declaratory judgment not based on validity, not later than 10 days after the defendant serves an answer that does not assert a claim for patent infringement (and Patent L.R. 3-1 does not apply), each party shall serve on each other party a list of claim terms which that party contends should be construed by the Court, and identify any claim term which that party contends should be governed by 35 U.S.C. § 112(6).

(b) The parties shall thereafter meet and confer for the purposes of limiting the terms in dispute by narrowing or resolving differences and facilitating the ultimate preparation of a Joint Claim Construction and Prehearing Statement. The parties shall also jointly identify the 10 terms likely to be most significant to resolving the parties' dispute, including those terms for which construction may be case or claim dispositive.

4-2. Exchange of Preliminary Claim Constructions and Extrinsic Evidence.

(a) Not later than 20 days after the exchange of the lists pursuant to Patent L.R. 4-1, the parties shall simultaneously exchange proposed constructions of each term identified by either party for claim construction. Each such "Preliminary Claim Construction" shall also, for each term which any party contends is governed by 35 U.S.C. § 112(6), identify the structure(s), act(s), or material(s) corresponding to that term's function.

(b) At the same time the parties exchange their respective "Preliminary Claim Constructions," each party shall also identify all references from the specification or prosecution history that support its proposed construction and designate any supporting extrinsic evidence including, without limitation, dictionary definitions, citations to learned treatises and prior art, and testimony of percipient and expert witnesses. Extrinsic evidence shall be identified by production number or by producing a copy if not previously produced. With respect to any supporting witness, percipient or expert, the identifying party shall also provide a description of the substance of that witness' proposed testimony that includes a listing of any opinions to be rendered in connection with claim construction.

(c) The parties shall thereafter meet and confer for the purposes of narrowing the issues and finalizing preparation of a Joint Claim Construction and Prehearing Statement.

4-3. Joint Claim Construction and Prehearing Statement.

Not later than 60 days after service of the "Invalidity Contentions," the parties shall complete and file a Joint Claim Construction and Prehearing Statement, which shall contain the following information:

(a) The construction of those terms on which the parties agree;

(b) Each party's proposed construction of each disputed term, together with an identification of all references from the specification or prosecution history that support that construction, and an identification of any extrinsic evidence known to the party on which it intends to rely either to support its proposed construction or to oppose any other party's proposed construction, including, but not limited to, as permitted by law, dictionary definitions, citations to learned treatises and prior art, and testimony of percipient and expert witnesses;

(c) An identification of the terms whose construction will be most significant to the resolution of the case up to a maximum of 10. The parties shall also identify any term among the 10 whose construction will be case or claim dispositive. If the parties cannot agree on the 10 most significant terms, the parties shall identify the ones which they do agree are most significant and then they may evenly divide the remainder with each party identifying what it believes are the remaining most significant terms. However, the total terms identified by all parties as most significant cannot exceed 10. For example, in a case involving two parties, if the parties agree upon the identification of five terms as most significant, each may only identify two additional terms as most significant; if the parties agree upon eight such terms, each party may only identify only one additional term as most significant.

(d) The anticipated length of time necessary for the Claim Construction Hearing;

(e) Whether any party proposes to call one or more witnesses at the Claim Construction Hearing, the identity of each such witness, and for each witness, a summary of his or her testimony including, for any expert, each opinion to be offered related to claim construction.

4-4. Completion of Claim Construction Discovery.

Not later than 30 days after service and filing of the Joint Claim Construction and Prehearing Statement, the parties shall complete all discovery relating to claim construction, including any depositions with respect to claim construction of any witnesses, including experts, identified in the Preliminary Claim Construction statement (Patent L.R. 4-2) or Joint Claim Construction and Prehearing Statement (Patent L.R. 4-3).

Patent Local Rules

4-5. Claim Construction Briefs.

(a) Not later than 45 days after serving and filing the Joint Claim Construction and Prehearing Statement, the party claiming patent infringement, or the party asserting invalidity if there is no infringement issue present in the case, shall serve and file an opening brief and any evidence supporting its claim construction.

(b) Not later than 14 days after service upon it of an opening brief, each opposing party shall serve and file its responsive brief and supporting evidence.

(c) Not later than 7 days after service upon it of a responsive brief, the party claiming patent infringement, or the party asserting invalidity if there is no infringement issue present in the case, shall serve and file any reply brief and any evidence directly rebutting the supporting evidence contained in an opposing party's response.

4-6. Claim Construction Hearing.

Subject to the convenience of the Court's calendar, two weeks following submission of the reply brief specified in Patent L.R. 4-5(c), the Court shall conduct a Claim Construction Hearing, to the extent the parties or the Court believe a hearing is necessary for construction of the claims at issue.

4-7. Good Faith Participation.

A failure to make a good faith effort to narrow the instances of disputed terms or otherwise participate in the meet and confer process of any of the provisions of section 4 may expose counsel to sanctions, including under 28 U.S.C. § 1927.

District of New Jersey (2008)

UNITED STATES DISTRICT COURT
DISTRICT OF NEW JERSEY

NOTICE TO THE BAR

IN RE: Amendment of Local Civil	**:**	
Rules	**:**	**O R D E R**

The Court being vested with authority pursuant to 28 U.S.C. § 2071 & Rule 83 of the Federal Rules of Civil Procedure to make and amend local rules; proposed amendments to Local Civil Rules having been submitted to the Lawyers Advisory Committee and the public for comment; comments having been received and considered, and the proposed amendments having been approved by the Board of Judges;

It is on this __23RD__ day of DECEMBER, 2008, ORDERED that Local Civil Rules are amended to read:

As adopted Dec. 11, 2008
Effective Jan. 1, 2009

UNITED STATES DISTRICT COURT
DISTRICT OF NEW JERSEY

L. Civ. R. 9.3 -- LOCAL PATENT RULES

TABLE OF CONTENTS

EXPLANATORY NOTES TO PROPOSED LOCAL PATENT RULES
1. SCOPE OF RULES
1.1. Title
1.2. Scope and Construction
1.3. Modification of these Rules
1.4. Effective Date

2. GENERAL PROVISIONS
2.1. Governing Procedure
(a) Initial Scheduling Conference
2.2. Confidentiality
2.3. Relationship to Federal Rules of Civil Procedure
2.4. Exchange of Expert Materials

3. PATENT DISCLOSURES
3.1. Disclosure of Asserted Claims and Infringement Contentions
3.2. Document Production Accompanying Disclosure
3.3. Invalidity Contentions
3.4. Document Production Accompanying Invalidity Contentions
3.5. Disclosure Requirement in Patent Cases for Declaratory Judgment of Invalidity.

(a) Invalidity Contentions If No Claim of Infringement
(b) Inapplicability of Rule
3.6. Disclosure Requirements for Patent Cases Arising Under 21 U.S.C. § 355 (commonly referred to as "the Hatch-Waxman Act")
3.7. Amendment to Contentions
3.8. Advice of Counsel
4. CLAIM CONSTRUCTION PROCEEDINGS
4.1. Exchange of Proposed Terms for Construction
4.2. Exchange of Preliminary Claim Constructions and Extrinsic Evidence.
4.3. Joint Claim Construction and Prehearing Statement
4.4. Completion of Claim Construction Discovery.
4.5. Claim Construction Submissions
4.6. Claim Construction Hearing

UNITED STATES DISTRICT COURT
DISTRICT OF NEW JERSEY

REPORT OF THE LOCAL PATENT RULES COMMITTEE

EXPLANATORY NOTES
TO PROPOSED LOCAL PATENT RULES

In June 2008, Chief Judge Garrett E. Brown, Jr., appointed a special Local Patent Rules Committee consisting of District Judges, Magistrate Judges, a cross-section of attorneys, and a Deputy Clerk of the Court, under the Chairmanship of the Hon. Jerome B. Simandle, U.S.D.J. The purpose of the Committee was to address whether there was a need for separate local rules governing patent cases in this District, and if so, to evaluate such potential rules. The consensus of the Committee was that a recommended standard protocol for patent cases would likely be helpful to the Court and to the parties. The Committee further concluded that it should look to other districts where local patent rules were already in place in developing a framework for this District.

As a starting point, the Committee surveyed all districts where local patent rules were then in effect. Based on that review, the Committee concluded that it would use the Patent Local Rules of the Northern District of California as a template, with variants as may be appropriate in light of the practices, procedures, and Local Civil Rules that have been followed in this District.

First among those considerations is the special role our Magistrate Judges play in case management. For example, in contrast to many other districts, the Magistrate Judges in New Jersey have principal responsibility for most pre-trial activities. The Magistrate Judges, therefore, are able to efficiently "customize" discovery and scheduling based on the needs of the parties and the subject matter of the lawsuit. Thus, the Committee took into account that in some instances the Court should have the discretion, where it may deem it appropriate, to accelerate or modify the schedule set forth in the local patent rules for less complex cases where the technology is relatively simple or there is little dispute as the structure, function or operation of the accused item. With this in mind, the Committee recognized that local patent rules should be consistent with current practices of the Court when providing guidance in the management of patent cases as well as providing to the parties some predictability in the format of the process.

Another special consideration addressed by the Committee was the entry of a discovery confidentiality order early in the case consistent with the obligations under Third Circuit authority, which obligations are not ordinarily found outside of the Circuit.

The Committee also considered certain procedural matters that might apply to Hatch-Waxman cases as these types of actions are in some respect different from the conventional patent cases.

In the end, drawing on the existing local patent rules in other districts and modified as warranted by the Committee, the proposed local patent rules were submitted to the Board of Judges in September 2008.

Although the charge of the Committee was to investigate the need for, and as appropriate, propose local patent rules, it also recognized that changes in patent law and applicable authority may warrant future modifications to these rules. Accordingly, it is the recommendation of the Committee to continue to oversee and evaluate the implementation and operation of these Rules

and to consider modifications where appropriate or necessary. The Committee stands ready to serve if requested by the Court to do so.

Local Patent Rules Committee

Hon. Jerome B. Simandle, U.S.D.J., Chair
Hon. Stanley R. Chesler, U.S.D.J.
Hon. Mary L. Cooper, U.S.D.J.
Hon. Joseph A. Greenaway, U.S.D.J.
Hon. Faith S. Hochberg, U.S.D.J.
Hon. Jose L. Linares, U.S.D.J.
Hon. William Martini, U.S.D.J.
Hon. Peter G. Sheridan, U.S.D.J.
Hon. Tonianne J. Bongiovanni, U.S.M.J.
Hon. Joel Schneider, U.S.M.J.
Hon. Patty Shwartz, U.S.M.J.
John T. O'Brien, Legal Coordinator

Arnold B. Calmann, Esq.
Thomas Curtin, Esq.
Marc Friedman, Esq.
Dennis F. Gleason, Esq.
Mary Sue Henifin, Esq.
Peter Menell, Prof. of Law,
Univ. of Calif., Berkeley School of Law
William L. Mentlik, Esq.
George F. Pappas, Esq.
Matthew D. Powers, Esq.
Donald Robinson, Esq.
Robert G. Shepherd, Esq.

September 10, 2008

L. Civ. R. 9.3 -- LOCAL PATENT RULES

1. SCOPE OF RULES

1.1. Title.

These are the Local Patent Rules for the United States District Court for the District of New Jersey. They should be cited as "L. Pat. R. __."

1.2. Scope and Construction.

These rules apply to all civil actions filed in or transferred to this Court which allege infringement of a patent in a complaint, counterclaim, cross-claim or third party claim, or which seek a declaratory judgment that a patent is not infringed, is invalid or is unenforceable. The Local Civil Rules of this Court shall also apply to such actions, except to the extent that they are inconsistent with these Local Patent Rules. If the filings or actions in a case do not trigger the application of these Local Patent Rules under the terms set forth herein, the parties shall, as soon as such circumstances become known, meet and confer for the purpose of agreeing on the application of these Local Patent Rules to the case and promptly report the results of the meet and confer to the Court.

1.3. Modification of these Rules.

The Court may modify the obligations or deadlines set forth in these Local Patent Rules based on the circumstances of any particular case, including, without limitation, the simplicity or complexity of the case as shown by the patents, claims, products, or parties involved. Such modifications shall, in most cases, be made at the initial Scheduling Conference, but may be made at other times by the Court sua sponte or upon a showing of good cause. In advance of submission of any request for a modification, the parties shall meet and confer for purposes of reaching an agreement, if possible, upon any modification.

1.4. Effective Date.

These Local Patent Rules take effect on January 1, 2009. They govern patent cases filed, transferred or removed on or after that date. For actions pending prior to the effective date, the Court will confer with the parties and apply these rules as the Court deems practicable.

2. GENERAL PROVISIONS

2.1. Governing Procedure.

(a) Initial Scheduling Conference. When the parties confer pursuant to Fed. R. Civ. P. 26(f), the parties shall discuss and address in the Discovery Plan submitted pursuant to Fed. R. Civ. P. 26(f) and L. Civ. R. 26.1(b)(2) the topics set forth in those rules and the following topics:

(1) Proposed modification of the obligations or deadlines set forth in these Local Patent Rules to ensure that they are suitable for the circumstances of the particular case (see L. Pat. R. 1.3);

(2) The scope and timing of any claim construction discovery including disclosure of and discovery from any expert witness permitted by the court;

(3) The format of the Claim Construction Hearing, including whether the Court will hear live testimony, the order of presentation, and the estimated length of the hearing;

(4) How the parties intend to educate the Court on the patent(s) at issue; and

(5) The need for any discovery confidentiality order and a schedule for presenting certification(s) required by L. Civ. R. 5.3(b)(2).

2.2. Confidentiality.

Discovery cannot be withheld on the basis of confidentiality absent Court order. Pending entry of a discovery confidentiality order, discovery and disclosures deemed confidential by a party shall be produced to the adverse party for outside counsel's Attorney's Eyes Only, solely for purposes of the pending case and shall not be disclosed to the client or any other person.

Within thirty (30) days after the initial Scheduling Conference, (a) the parties shall present a consent discovery confidentiality order, supported by a sufficient certification under L. Civ. R. 5.3(b)(2), or (b) in the absence of consent, a party shall, supported by a sufficient certification, apply for entry of a discovery confidentiality order under L. Civ. R. 5.3(b)(5) and L. Civ. R. 37.1(a)(1). The Court will decide those issues and enter the appropriate order, or the court may enter the District's approved Discovery Confidentiality Order as set forth in Appendix S to these Rules if appropriate, in whole or in part.

With respect to all issues of discovery confidentiality, the parties shall comply with all terms of L. Civ. R. 5.3.

2.3. Relationship to Federal Rules of Civil Procedure.

Except as provided in this paragraph or as otherwise ordered, it shall not be a ground for objecting to an opposing party's discovery request (e.g., interrogatory, document request, request for admission, deposition question) or declining to provide information otherwise required to be disclosed pursuant to Fed. R. Civ. P. 26(a)(1) that the discovery request or disclosure requirement is premature in light of, or otherwise conflicts with, these Local Patent Rules, absent other legitimate objection. A party may object, however, to responding to the following categories of discovery requests (or decline to provide information in its initial disclosures under Fed. R. Civ. P. 26(a)(1)) on the ground that they are premature in light of the timetable provided in the Local Patent Rules:

(a) Requests seeking to elicit a party's claim construction position;

(b) Requests seeking to elicit from the patent claimant a comparison of the asserted claims and the accused apparatus, product, device, process, method, act, or other instrumentality;

(c) Requests seeking to elicit from an accused infringer a comparison of the asserted claims and the prior art; and

(d) Requests seeking to elicit from an accused infringer the identification of any advice of counsel, and related documents.

Where a party properly objects to a discovery request (or declines to provide information in its initial disclosures under Fed. R. Civ. P. 26(a)(1)) as set forth above, that party shall provide the requested information on the date on which it is required to be provided to an opposing party under these Local Patent Rules or as set by the Court, unless there exists another legitimate ground for objection.

2.4. Exchange of Expert Materials.

(a) Disclosures of claim construction expert materials and depositions of such experts are governed by L. Pat. R. 4.1, et seq., unless otherwise ordered by the Court.

(b) Upon a sufficient showing that expert reports related to issues other than claim construction cannot be rendered until after a claim construction ruling has been entered by the Court, the disclosure of expert materials related to issues other than claim construction will not be required until claim construction issues have been decided.

3. PATENT DISCLOSURES

3.l. Disclosure of Asserted Claims and Infringement Contentions.

Not later than 14 calendar days after the initial Scheduling Conference, a party claiming patent infringement shall serve on all parties a "Disclosure of Asserted Claims and Infringement Contentions." Separately for each opposing party, the "Disclosure of Asserted Claims and Infringement Contentions" shall contain the following information:

(a) Each claim of each patent in suit that is allegedly infringed by each opposing party, including for each claim the applicable statutory subsections of 35 U.S.C. § 271 asserted;

(b) Separately for each asserted claim, each accused apparatus, product, device, process, method, act, or other instrumentality ("Accused Instrumentality") of each opposing party of which the party is aware. This identification shall be as specific as possible. Each product, device, and apparatus shall be identified by name or model number, if known. Each method or process shall be identified by name, if known, or by any product, device, or apparatus which, when used, allegedly results in the practice of the claimed method or process;

(c) A chart identifying specifically where each limitation of each asserted claim is found within each Accused Instrumentality, including for each limitation that such party contends is governed by 35 U.S.C. § 112(6), the identity of the structure(s), act(s), or material(s) in the Accused Instrumentality that performs the claimed function;

(d) For each claim which is alleged to have been indirectly infringed, an identification of any direct infringement and a description of the acts of the alleged indirect infringer that contribute to or are inducing that direct infringement. Insofar as alleged direct infringement is based on joint acts of multiple parties, the role of each such party in the direct infringement must be described;

(e) Whether each limitation of each asserted claim is alleged to be literally present or present under the doctrine of equivalents in the Accused Instrumentality;

(f) For any patent that claims priority to an earlier application, the priority date to which each asserted claim allegedly is entitled;

(g) If a party claiming patent infringement wishes to preserve the right to rely, for any purpose, on the assertion that its own apparatus, product, device, process, method, act, or other instrumentality practices the claimed invention, the party shall identify, separately for each asserted claim, each such apparatus, product, device, process, method, act, or other instrumentality that incorporates or reflects that particular claim; and

(h) If a party claiming patent infringement alleges willful infringement, the basis for such allegation.

3.2. Document Production Accompanying Disclosure.

With the "Disclosure of Asserted Claims and Infringement Contentions," the party claiming patent infringement shall produce to each opposing party or make available for inspection and copying:

(a) Documents (e.g., contracts, purchase orders, invoices, advertisements, marketing materials, offer letters, beta site testing agreements, and third party or joint development agreements) sufficient to evidence each discussion with, disclosure to, or other manner of providing to a third party, or sale of or offer to sell, or any public use of, the claimed invention prior to the date of application for the patent in suit. A party's production of a document as required herein shall not constitute an admission that such document evidences or is prior art under 35 U.S.C. § 102;

(b) All documents evidencing the conception, reduction to practice, design, and development of each claimed invention, which were created on or before the date of application for the patent in suit or the priority date identified pursuant to L. Pat. R. 3.1(f), whichever is earlier;

(c) A copy of the file history for each patent in suit (or so much thereof as is in the possession of the patentee); and

(d) All documents evidencing ownership of the patent rights by the party asserting patent infringement.

(e) If a party identifies instrumentalities pursuant to L. Pat. R. 3.1(g), documents sufficient to show the operation of any aspects or elements of such instrumentalities the patent claimant relies upon as embodying any asserted claims.

The producing party shall separately identify by production number which documents correspond to each category.

3.3. Invalidity Contentions.

Not later than 45 days after service upon it of the "Disclosure of Asserted Claims and Infringement Contentions," each party opposing a claim of patent infringement, shall serve on all parties its "Invalidity Contentions" which shall contain the following information:

(a) The identity of each item of prior art that allegedly anticipates each asserted claim or renders it obvious. Each prior art patent shall be identified by its number, country of origin, and date of issue. Each prior art publication shall be identified by its title, date of publication, and where feasible, author and publisher. Prior art under 35 U.S.C. § 102(b) shall be identified by specifying the item offered for sale or publicly used or known, the date the offer or use took place or the information became known, and the identity of the person or entity which made the use or which made and received the offer, or the person or entity which made the information known or to whom it was made known. Prior art under 35 U.S.C. § 102(f) shall be identified by providing the name of the person(s) from whom and the circumstances under which the invention or any part of it was derived. Prior art under 35 U.S.C. § 102(g) shall be identified by providing the identities of the person(s) or entities involved in and the circumstances surrounding the making of the invention before the patent applicant(s);

(b) Whether each item of prior art anticipates each asserted claim or renders it obvious. If obviousness is alleged, an explanation of why the prior art renders the asserted claim obvious, including an identification of any combinations of prior art showing obviousness;

(c) A chart identifying where specifically in each alleged item of prior art each limitation of each asserted claim is found, including for each limitation that such party contends is governed by 35 U.S.C. § 112(6), the identity of the structure(s), act(s), or material(s) in each item of prior art that performs the claimed function; and

(d) Any grounds of invalidity based on 35 U.S.C. § 101, indefiniteness under 35 U.S.C. § 112(2) or enablement or written description under 35 U.S.C. § 112(1) of any of the asserted claims.

3.4. Document Production Accompanying Invalidity Contentions.

With the "Invalidity Contentions," the party opposing a claim of patent infringement shall produce or make available for inspection and copying:

(a) Source code, specifications, schematics, flow charts, artwork, formulas, or other documentation sufficient to show the operation, composition, or structure of any aspects or elements of an Accused Instrumentality identified by the patent claimant in its L. Pat. R. 3.1(c) chart; and

(b) A copy or sample of the prior art identified pursuant to L. Pat. R. 3.3(a) which does not appear in the file history of the patent(s) at issue. To the extent any such item is not in English, an English translation of the portion(s) relied upon shall be produced.

The producing party shall separately identify by production number which documents correspond to each category.

3.5. Disclosure Requirement in Patent Cases for Declaratory Judgment of Invalidity.

(a) Invalidity Contentions If No Claim of Infringement. In all cases in which a party files a complaint or other pleading seeking a declaratory judgment that a patent is invalid, L. Pat. R. 3.1 and 3.2 shall not apply unless and until a claim for patent infringement is made by a party. If the defendant does not assert a claim for patent infringement in its answer to the complaint, or 10 days after the Initial Scheduling Conference, whichever is later, the party seeking a declaratory judgment of invalidity shall serve upon each opposing party its Invalidity Contentions that conform to L. Pat. R. 3.3 and produce or make available for inspection and copying the documents described in L. Pat. R. 3.4.

(b) Inapplicability of Rule. This L. Pat. R. 3.5 shall not apply to cases in which a request for a declaratory judgment that a patent is invalid is filed in response to a complaint for infringement of the same patent, in which case the provisions of L. Pat. R. 3.3 shall govern.

3.6. Disclosure Requirements for Patent Cases Arising Under 21 U.S.C. § 355 (commonly referred to as "the Hatch-Waxman Act").

The following provision applies to all patents subject to a Paragraph IV certification in cases arising under 21 U.S.C. § 355 (commonly referred to as "the Hatch-Waxman Act"). This provision takes precedence over any conflicting provisions in L. Pat. R. 3.1 to 3.5 for all cases arising under 21 U.S.C. § 355.

(a) At or before the initial Scheduling Conference, the Defendant(s) shall produce to Plaintiff(s) the entire Abbreviated New Drug Application or New Drug Application that is the basis of the case in question.

(b) Not more than 14 calendar days after the initial Scheduling Conference, the Defendant(s) shall provide to Plaintiff(s) the written basis for their "Invalidity Contentions," for any patents referred to in Defendant(s) Paragraph IV Certification which shall contain all disclosures required by L. Pat. R. 3.3.

(c) Any "Invalidity Contentions" disclosed under L. Pat. R. 3.6(b), shall be accompanied by the production of documents required under L. Pat. R. 3.4.

(d) Not more than 14 calendar days after the initial Scheduling Conference, the Defendant(s) shall provide to Plaintiff(s) the written basis for their "Non-Infringement Contentions," for any patents referred to in Defendant(s) Paragraph IV Certification which shall include a claim chart identifying each claim at issue in the case and each limitation of each claim at issue. The claim chart shall specifically identify for each claim which claim limitation(s) are literally absent from the Defendant(s) allegedly infringing Abbreviated New Drug Application or New Drug Application.

(e) Any "Non-Infringement Contentions" disclosed under L. Pat. R. 3.6(d), shall be accompanied by the production of any document or thing that the Defendant(s) intend to rely on in defense against any infringement contentions by Plaintiff(s).

(f) Not more than 45 calendar days after the disclosure of the "Non-Infringement Contentions" as required by L. Pat. R. 3.6(d), Plaintiff(s) shall provide Defendant(s) with a "Disclosure of Asserted Claims and Infringement Contentions," for all patents referred to in

Defendant(s) Paragraph IV Certification, which shall contain all disclosures required by L. Pat. R. 3.1.

(g) Any "Disclosure of Asserted Claims and Infringement Contentions" disclosed under L. Pat. R. 3.6(f), shall be accompanied by the production of documents required under L. Pat. R. 3.2.

3.7. Amendment to Contentions.

Amendment of the Infringement Contentions or the Invalidity Contentions may be made by order of the Court upon a timely application and showing of good cause. The application shall disclose whether the adverse party consents or objects. Non-exhaustive examples of circumstances that may, absent undue prejudice to the adverse party, support a finding of good cause include: (a) a claim construction by the Court different from that proposed by the party seeking amendment; (b) recent discovery of material prior art despite earlier diligent search; (c) recent discovery of nonpublic information about the Accused Instrumentality which was not discovered, despite diligent efforts, before the service of the Infringement Contention; and (d) disclosure of an asserted claim and infringement contention by a Hatch-Waxman Act plaintiff under L. Pat. R. 3.6(f) that requires response by defendant because it was not previously presented or reasonably anticipated. The duty to supplement discovery responses under Fed. R. Civ. P. 26(e) does not excuse the need to obtain leave of Court to amend contentions.

3.8. Advice of Counsel.

Unless otherwise ordered by the Court, not later than 30 days after entry of the Court's claim construction order, or upon such other date as set by the Court, each party relying upon advice of counsel as part of a patent-related claim or defense for any reason shall:

(a) Produce or make available for inspection and copying any written advice and documents related thereto for which the attorney-client and work product protection have been waived;

(b) Provide a written summary of any oral advice and produce or make available for inspection and copying that summary and documents related thereto for which the attorney-client and work product protection have been waived; and

(c) Serve a privilege log identifying any documents other than those identified in subpart (a) above, except those authored by counsel acting solely as trial counsel, relating to the subject matter of the advice which the party is withholding on the grounds of attorney-client privilege or work product protection.

A party who does not comply with the requirements of this L. Pat. R. 3.8 shall not be permitted to rely on advice of counsel for any purpose absent a stipulation of all parties or by order of the Court.

4. CLAIM CONSTRUCTION PROCEEDINGS

4.1. Exchange of Proposed Terms for Construction.

(a) Not later than 14 calendar days after service of the "Invalidity Contentions" pursuant to L. Pat. R. 3.3, not later than 45 days after service upon it of the "Disclosure of Asserted Claims and Infringement Contentions" in those actions where validity is not at issue (and L. Pat. R. 3.3 does not apply), or, in all cases in which a party files a complaint or other pleading seeking a declaratory judgment not based on validity, not later than 14 calendar days after the defendant serves an answer that does not assert a claim for patent infringement (and L. Pat. R. 3.1 does not apply), each party shall serve on each other party a list of claim terms which that party contends should be construed by the Court, and identify any claim term which that party contends should be governed by 35 U.S.C. § 112(6).

(b) The parties shall thereafter meet and confer for the purposes of limiting the terms in dispute by narrowing or resolving differences and facilitating the ultimate preparation of a Joint Claim Construction and Prehearing Statement.

4.2. Exchange of Preliminary Claim Constructions and Extrinsic Evidence.

(a) Not later than 21 calendar days after the exchange of the lists pursuant to L. Pat. R. 4.1, the parties shall simultaneously exchange preliminary proposed constructions of each term identified by any party for claim construction. Each such "Preliminary Claim Construction" shall also, for each term which any party contends is governed by 35 U.S.C. § 112(6), identify the structure(s), act(s), or material(s) corresponding to that term's function.

(b) At the same time the parties exchange their respective "Preliminary Claim Constructions," each party shall also identify all references from the specification or prosecution history that support its preliminary proposed construction and designate any supporting extrinsic evidence including, without limitation, dictionary definitions, citations to learned treatises and prior art and testimony of all witnesses including expert witnesses. Extrinsic evidence shall be identified by production number or by producing a copy if not previously produced. With respect to all witnesses including experts, the identifying party shall also provide a description of the substance of that witness' proposed testimony that includes a listing of any opinions to be rendered in connection with claim construction.

(c) The parties shall thereafter meet and confer for the purposes of narrowing the issues and finalizing preparation of a Joint Claim Construction and Prehearing Statement.

4.3. Joint Claim Construction and Prehearing Statement.

Not later than 30 days after the exchange of "Preliminary Claim Constructions" under L. Pat. R. 4.2(a), the parties shall complete and file a Joint Claim Construction and Prehearing Statement, which shall contain the following information:

(a) The construction of those terms on which the parties agree;

(b) Each party's proposed construction of each disputed term, together with an identification of all references from the intrinsic evidence that support that construction, and an identification of any extrinsic evidence known to the party on which it intends to rely either to support its proposed construction or to oppose any other party's proposed construction, including, but not limited to, as permitted by law, dictionary definitions, citations to learned treatises and prior art, and testimony of all witnesses including experts;

(c) An identification of the terms whose construction will be most significant to the resolution of the case. The parties shall also identify any term whose construction will be case or claim dispositive or substantially conducive to promoting settlement, and the reasons therefor;

(d) The anticipated length of time necessary for the Claim Construction Hearing; and

(e) Whether any party proposes to call one or more witnesses at the Claim Construction Hearing, the identity of each such witness, and for each witness, a summary of his or her testimony including, for any expert, each opinion to be offered related to claim construction.

4.4. Completion of Claim Construction Discovery.

Not later than 30 days after service and filing of the Joint Claim Construction and Prehearing Statement, the parties shall complete all discovery relating to claim construction, including any depositions with respect to claim construction of any witnesses, other than experts, identified in the Preliminary Claim Construction statement (L. Pat. R. 4.2) or Joint Claim Construction and Prehearing Statement (L. Pat. R. 4.3).

4.5. Claim Construction Submissions.

(a) Not later than 45 days after serving and filing the Joint Claim Construction and Prehearing Statement, the parties shall contemporaneously file and serve their opening *Markman* briefs and any evidence supporting claim construction, including experts' certifications or declarations ("Opening *Markman* Submissions").

(b) Unless otherwise ordered by the Court, any discovery from an expert witness who submitted a certification or declaration under L. Pat. R. 4.5(a) shall be concluded within 30 days after filing the Opening *Markman* Submissions.

(c) Not later than 60 days after the filing of the Opening *Markman* Submissions, the parties shall contemporaneously file and serve responding *Markman* briefs and any evidence supporting claim construction, including any responding experts' certifications or declarations.

4.6. Claim Construction Hearing.

Within two weeks following submission of the briefs and evidence specified in L. Pat. R. 4.5(c), counsel shall confer and propose to the Court a schedule for a Claim Construction Hearing, to the extent the parties or the Court believe a hearing is necessary for construction of the claims at issue.

APPENDIX S

UNITED STATES DISTRICT COURT
FOR THE DISTRICT OF NEW JERSEY

Plaintiff, vs. Defendant.	Civil Action No.: ___ Civ. ____(XXX) **DISCOVERY CONFIDENTIALITY ORDER**

It appearing that discovery in the above-captioned action is likely to involve the disclosure of confidential information, it is ORDERED as follows:

1. Any party to this litigation and any third-party shall have the right to designate as "Confidential" and subject to this Order any information, document, or thing, or portion of any document or thing: (a) that contains trade secrets, competitively sensitive technical, marketing, financial, sales or other confidential business information, or (b) that contains private or confidential personal information, or (c) that contains information received in confidence from third parties, or (d) which the producing party otherwise believes in good faith to be entitled to protection under Rule 26(c)(1)(G) of the Federal Rules of Civil Procedure and Local Civil Rule 5.3. Any party to this litigation or any third party covered by this Order, who produces or discloses any Confidential material, including without limitation any information, document, thing, interrogatory answer, admission, pleading, or testimony, shall mark the same with the foregoing or similar legend: "CONFIDENTIAL" or "CONFIDENTIAL – SUBJECT TO DISCOVERY CONFIDENTIALITY ORDER" (hereinafter "Confidential").

2. Any party to this litigation and any third-party shall have the right to designate as "Attorneys' Eyes Only" and subject to this Order any information, document, or thing, or portion of any document or thing that contains highly sensitive business or personal information, the disclosure of which is highly likely to cause significant harm to an individual or to the business or competitive position of the designating party. Any party to this litigation or any third party who is covered by this Order, who produces or discloses any Attorneys' Eyes Only material, including without limitation any information, document, thing, interrogatory answer, admission, pleading, or testimony, shall mark the same with the foregoing or similar legend: "ATTORNEYS' EYES ONLY" or "ATTORNEYS' EYES ONLY – SUBJECT TO DISCOVERY CONFIDENTIALITY ORDER" (hereinafter "Attorneys' Eyes Only").

3. All Confidential material shall be used by the receiving party solely for purposes of the prosecution or defense of this action, shall not be used by the receiving party for any business, commercial, competitive, personal or other purpose, and shall not be disclosed by the receiving party to anyone other than those set forth in Paragraph 4, unless and until the restrictions herein are removed either by written agreement of counsel for the parties, or by Order of the Court. It is, however, understood that counsel for a party may give advice and opinions to his or her client solely relating to the above-captioned action based on his or her

evaluation of Confidential material, provided that such advice and opinions shall not reveal the content of such Confidential material except by prior written agreement of counsel for the parties, or by Order of the Court.

4. Confidential material and the contents of Confidential material may be disclosed only to the following individuals under the following conditions:

a. Outside counsel (herein defined as any attorney at the parties' outside law firms) and relevant in-house counsel for the parties;

b. Outside experts or consultants retained by outside counsel for purposes of this action, provided they have signed a non-disclosure agreement in the form attached hereto as Exhibit A;

c. Secretarial, paralegal, clerical, duplicating and data processing personnel of the foregoing;

d. The Court and court personnel;

e. Any deponent may be shown or examined on any information, document or thing designated Confidential if it appears that the witness authored or received a copy of it, was involved in the subject matter described therein or is employed by the party who produced the information, document or thing, or if the producing party consents to such disclosure;

f. Vendors retained by or for the parties to assist in preparing for pretrial discovery, trial and/or hearings including, but not limited to, court reporters, litigation support personnel, jury consultants, individuals to prepare demonstrative and audiovisual aids for use in the courtroom or in depositions or mock jury sessions, as well as their staff, stenographic, and clerical employees whose duties and responsibilities require access to such materials; and

g. The parties. In the case of parties that are corporations or other business entities, "party" shall mean executives who are required to participate in decisions with reference to this lawsuit.

5. Confidential material shall be used only by individuals permitted access to it under Paragraph 4. Confidential material, copies thereof, and the information contained therein, shall not be disclosed in any manner to any other individual, until and unless (a) outside counsel for the party asserting confidentiality waives the claim of confidentiality, or (b) the Court orders such disclosure.

6. With respect to any depositions that involve a disclosure of Confidential material of a party to this action, such party shall have until thirty (30) days after receipt of the deposition transcript within which to inform all other parties that portions of the transcript are to be designated Confidential, which period may be extended by agreement of the parties. No such deposition transcript shall be disclosed to any individual other than the individuals described in Paragraph 4(a), (b), (c), (d) and (f) above and the deponent during these thirty (30) days, and no individual attending such a deposition shall disclose the contents of the deposition to any individual other than those described in Paragraph 4(a), (b), (c), (d) and (f) above during said thirty (30) days. Upon being informed that certain portions of a deposition are to be designated as Confidential, all parties shall immediately cause each copy of the transcript in its custody or control to be appropriately marked and limit disclosure of that transcript in accordance with Paragraphs 3 and 4.

7. Material produced and marked as Attorneys' Eyes Only may be disclosed only to outside counsel for the receiving party and to such other persons as counsel for the producing party agrees in advance or as Ordered by the Court.

8. If counsel for a party receiving documents or information designated as Confidential or Attorneys' Eyes Only hereunder objects to such designation of any or all of such items, the following procedure shall apply:

(a) Counsel for the objecting party shall serve on the designating party or third party a written objection to such designation, which shall describe with particularity the documents or information in question and shall state the grounds for objection. Counsel for the designating party or third party shall respond in writing to such objection within ten (10) days, and shall state with particularity the grounds for asserting that the document or information is Confidential or Attorneys' Eyes Only. If no timely written response is made to the objection, the challenged designation will be deemed to be void. If the designating party or nonparty makes a timely response to such objection asserting the propriety of the designation, counsel shall then confer in good faith in an effort to resolve the dispute.

(b) If a dispute as to a Confidential or Attorneys' Eyes Only designation of a document or item of information cannot be resolved by agreement, the proponent of the designation being challenged shall present the dispute to the Court initially by telephone or letter, in accordance with Local Civil Rule 37.1(a)(1), before filing a formal motion for an order regarding the challenged designation. The document or information that is the subject of the filing shall be treated as originally designated pending resolution of the dispute.

9. All requests to seal documents filed with the Court shall comply with Local Civil Rule 5.3.

10. If the need arises during trial or at any Hearing before the Court for any party to disclose Confidential or Attorneys' Eyes Only information, it may do so only after giving notice to the producing party and as directed by the Court.

11. To the extent consistent with applicable law, the inadvertent or unintentional disclosure of Confidential material that should have been designated as such, regardless of whether the information, document or thing was so designated at the time of disclosure, shall not be deemed a waiver in whole or in part of a party's claim of confidentiality, either as to the specific information, document or thing disclosed or as to any other material or information concerning the same or related subject matter. Such inadvertent or unintentional disclosure may be rectified by notifying in writing counsel for all parties to whom the material was disclosed that the material should have been designated Confidential within a reasonable time after disclosure. Such notice shall constitute a designation of the information, document or thing as Confidential under this Discovery Confidentiality Order.

12. When the inadvertent or mistaken disclosure of any information, document or thing protected by privilege or work-product immunity is discovered by the producing party and brought to the attention of the receiving party, the receiving party's treatment of such material shall be in accordance with Federal Rule of Civil Procedure 26(b)(5)(B). Such inadvertent or mistaken disclosure of such information, document or thing shall not by itself constitute a waiver by the producing party of any claims of privilege or work-product immunity. However, nothing herein restricts the right of the receiving party to challenge the producing party's claim of

privilege if appropriate within a reasonable time after receiving notice of the inadvertent or mistaken disclosure.

13. No information that is in the public domain or which is already known by the receiving party through proper means or which is or becomes available to a party from a source other than the party asserting confidentiality, rightfully in possession of such information on a non-confidential basis, shall be deemed or considered to be Confidential material under this Discovery Confidentiality Order.

14. This Discovery Confidentiality Order shall not deprive any party of its right to object to discovery by any other party or on any otherwise permitted ground. This Discovery Confidentiality Order is being entered without prejudice to the right of any party to move the Court for modification or for relief from any of its terms.

15. This Discovery Confidentiality Order shall survive the termination of this action and shall remain in full force and effect unless modified by an Order of this Court or by the written stipulation of the parties filed with the Court.

16. Upon final conclusion of this litigation, each party or other individual subject to the terms hereof shall be under an obligation to assemble and to return to the originating source all originals and unmarked copies of documents and things containing Confidential material and to destroy, should such source so request, all copies of Confidential material that contain and/or constitute attorney work product as well as excerpts, summaries and digests revealing Confidential material; provided, however, that counsel may retain complete copies of all transcripts and pleadings including any exhibits attached thereto for archival purposes, subject to the provisions of this Discovery Confidentiality Order. To the extent a party requests the return of Confidential material from the Court after the final conclusion of the litigation, including the exhaustion of all appeals therefrom and all related proceedings, the party shall file a motion seeking such relief.

IT IS SO ORDERED.

Dated: _____ _____

_____, U.S.M.J.

EXHIBIT A

UNITED STATES DISTRICT COURT
FOR THE DISTRICT OF NEW JERSEY

Plaintiff, vs. Defendant.	Civil Action No.: __ Civ. ____ (XX) **AGREEMENT TO BE BOUND BY DISCOVERY CONFIDENTIALITY ORDER**

I, _____, being duly sworn, state that:

1. My address is _____.
2. My present employer is _____ and the address of my present employment is _____.
3. My present occupation or job description is _____.
4. I have carefully read and understood the provisions of the Discovery Confidentiality Order in this case signed by the Court, and I will comply with all provisions of the Discovery Confidentiality Order.
5. I will hold in confidence and not disclose to anyone not qualified under the Discovery Confidentiality Order any Confidential Material or any words, summaries, abstracts, or indices of Confidential Information disclosed to me.
6. I will limit use of Confidential Material disclosed to me solely for purpose of this action.
7. No later than the final conclusion of the case, I will return all Confidential Material and summaries, abstracts, and indices thereof which come into my possession, and documents or things which I have prepared relating thereto, to counsel for the party for whom I was employed or retained.

I declare under penalty of perjury that the foregoing is true and correct.

Dated:_____ _____
[Name]

It is FURTHER ORDERED these amendments are effective January 1, 2009.

FOR THE COURT:

S/ Garrett E. Brown, Jr.
GARRETT E. BROWN, JR.
Chief Judge

Appendix E. Model Patent Jury Instructions

Model Patent Jury Instructions
for the Northern District of California

November 29, 2007

Working Committee

Martin Fliesler – Chair
Professor Mark Lemley
David McIntyre
James Pooley
Matthew Powers
Honorable Ronald Whyte
James Yoon

I. Introduction

These Revised Model Patent Jury Instructions have been adopted by the Northern District of California as model patent instructions. The court intends to revise these instructions as needed to make them more complete and to ensure compliance with U.S. Supreme Court and Federal Circuit decisions. The court is indebted to the Working Committee which spent many hours drafting these model instructions.

The instructions have been prepared to assist judges in communicating effectively and in plain English with jurors in patent cases. The instructions are models and are not intended to be used without tailoring. They are not substitutes for the individual research and drafting that may be required in a particular case.

These instructions include only instructions on patent law. They will need to be supplemented with standard instructions on, among other things, the duties of the judge and jury, the consideration of evidence, the duty to deliberate, and the return of a verdict. The Ninth Circuit's Manual of Model Civil Jury Instructions (Revised April 2007) is a good reference for standard instructions for civil cases.

The instructions use the terms ~~"p~~atent holder" and ~~"a~~lleged infringer" in brackets. The names of the parties should be substituted for these terms as appropriate. Other language is bracketed as it may not be appropriate for a particular case. Empty brackets signify additional case specific information to be added, such as patent or claim numbers.

Suggested revisions to these instructions may be sent to the Honorable Ronald M. Whyte at the e-mail address: Ronald_Whyte@cand.uscourts.gov or at his U.S. mail address: U.S. Court Building, 280 S. First Street, San Jose, California 95113.

II. Table of Contents

A. Preliminary Instructions

1. What a Patent Is and How One is Obtained

2. Patent At Issue

3. Summary of Contentions

4. Overview of Applicable Law

5. Outline of Trial

B. Instructions at Close of Evidence

1. Summary of Contentions

2. Claim Construction
   - 2.1 Interpretation of Claims

3. Infringement
   - 3.1 Infringement – Burden of Proof
   - 3.2 Direct Infringement
   - 3.3 Literal Infringement
   - 3.4 Infringement Under the Doctrine of Equivalents
   - 3.5 Means-Plus-Function Claims – Literal Infringement
   - 3.6 Means-Plus-Function Claims – Infringement Under the Doctrine of Equivalents
   - 3.7 Limitations on the Doctrine of Equivalents
   - 3.8 Indirect Infringement – Generally
   - 3.9 Contributory Infringement
   - 3.10 Inducing Patent Infringement
   - 3.11 Willful Infringement

4. Validity
   - 4.1 Invalidity – Burden of Proof
   - 4.2 Adequacy of Patent Specification
     - 4.2a Written Description
     - 4.2b Enablement
     - 4.2c Best Mode

4.3 The Claims
4.3a1 Anticipation
4.3a2 Statutory Bars
4.3b Obviousness – (Alternative 1) – (Alternative 2)
4.3bi Scope and Content of Prior Art
4.3bii Differences Over the Prior Art
4.3biii Level of Ordinary Skill
4.3c Inventorship

5. Patent Damages
5.1 Damages – Burden of Proof
5.2 Lost Profits – Generally
5.3 Lost Profits – Factors to Consider
5.3a Lost Profits – Market Share
5.4 Lost Profits – Collateral Sales
5.5 Lost Profits – Price Erosion
5.6 Reasonable Royalty – Entitlement
5.7 Reasonable Royalty – Definition
5.8 Date of Commencement – Products

C. Appendix

1. Glossary

2. Comments Regarding Use of Sample Verdict Form

3. Sample Verdict Form

A.1. Preliminary Instructions

WHAT A PATENT IS AND HOW ONE IS OBTAINED

This case involves a dispute relating to a United States patent. Before summarizing the positions of the parties and the legal issues involved in the dispute, let me take a moment to explain what a patent is and how one is obtained.

Patents are granted by the United States Patent and Trademark Office (sometimes called ―the PTO"). The process of obtaining a patent is called patent prosecution. A valid United States patent gives the patent owner the right [for up to 20 years from the date the patent application was filed] [for 17 years from the date the patent issued] to prevent others from making, using, offering to sell, or selling the patented invention within the United States or from importing it into the United States without the patent holder's permission. A violation of the patent owner's rights is called infringement. The patent owner may try to enforce a patent against persons believed to be infringers by a lawsuit filed in federal court.

To obtain a patent one must file an application with the PTO. The PTO is an agency of the federal government and employs trained examiners who review applications for patents. The application includes what is called a ―specification," which must contain a written description of the claimed invention telling what the invention is, how it works, how to make it and how to use it so others skilled in the field will know how to make or use it. The specification concludes with one or more numbered sentences. These are the patent ―claims." When the patent is eventually granted by the PTO, the claims define the boundaries of its protection and give notice to the public of those boundaries.

After the applicant files the application, a PTO patent examiner reviews the patent application to determine whether the claims are patentable and whether the specification adequately describes the invention claimed. In examining a patent application, the patent examiner reviews records available to the PTO for what is referred to as ―prior art." The examiner also will review prior art if it is submitted to the PTO by the applicant. Prior art is defined by law, and I will give you at a later time specific instructions as to what constitutes prior art. However, in general, prior art includes things that existed before the claimed invention, that were publicly known, or used in a publicly accessible way in this country, or that were patented or described in a publication in any country. The examiner considers, among other things, whether each claim defines an invention that is new, useful, and not obvious in view of the prior art. A patent lists the prior art that the examiner considered; this list is called the ―cited references."

After the prior art search and examination of the application, the patent examiner then informs the applicant in writing what the examiner has found and whether any claim is patentable, and thus will be ―allowed." This writing from the patent examiner is called an ―office action." If the examiner rejects the claims, the applicant then responds and sometimes changes the claims or submits new claims. This process, which takes place only between the examiner and the patent applicant, may go back and forth for some time until the examiner is satisfied that the application and claims meet the requirements for a patent. The papers generated during this time of communicating back and forth between the patent examiner and the applicant make up what is

called the ~~"~~prosecution history." All of this material becomes available to the public no later than the date when the patent issues.

The fact that the PTO grants a patent does not necessarily mean that any invention claimed in the patent, in fact, deserves the protection of a patent. For example, the PTO may not have had available to it all the information that will be presented to you. A person accused of infringement has the right to argue here in federal court that a claimed invention in the patent is invalid because it does not meet the requirements for a patent.

PATENT AT ISSUE

[The court should show the jury the patent at issue and point out the parts including the specification, drawings and claims including the claims at issue. The court could at this point also hand out its construction of any claim terms and the glossary.]

A.3. Preliminary Instructions

SUMMARY OF CONTENTIONS

To help you follow the evidence, I will now give you a summary of the positions of the parties.

The parties in this case are [patent holder] and [alleged infringer]. The case involves a United States patent obtained by [inventor], and transferred by [inventor] to [patent holder]. The patent involved in this case is United States Patent Number [patent number] which lists [inventor] as the inventor. For convenience, the parties and I will often refer to this patent as the [last three numbers of the patent] patent, [last three numbers of patent] being the last three numbers of its patent number.

[Patent holder] filed suit in this court seeking money damages from [alleged infringer] for allegedly infringing the [ ] patent by [making], [importing], [using], [selling], and [offering for sale] [products] [methods] that [patent holder] argues are covered by claims [ ] of the patent. [[Patent holder] also argues that [alleged infringer] has [actively induced infringement of these claims of the [ ] patent by others] [and] [contributed to the infringement of these claims of the [ ] patent by others].] The [products] [methods] that are alleged to infringe are [list of accused products or methods].

[Alleged infringer] denies that it has infringed claims [ ] of the [ ] patent and argues that, in addition, the claims are invalid. [Add other defenses, if applicable].

Your job will be to decide whether claims [ ] of the [ ] patent have been infringed and whether those claims are invalid. If you decide that any claim of the [ ] patent has been infringed and is not invalid, you will then need to decide any money damages to be awarded to [patent holder] to compensate it for the infringement. [You will also need to make a finding as to whether the infringement was willful. If you decide that any infringement was willful, that decision should not affect any damage award you give. I will take willfulness into account later.]

It is my job as judge to determine the meaning of any claim language that needs interpretation. You must accept the meanings I give you and use them when you decide whether any claim of the patent has been infringed and whether any claim is invalid.

A.4. Preliminary Instructions

OVERVIEW OF APPLICABLE LAW

[The court may want to consider giving preliminary instructions on the patent law applicable to the specific issues in the case. This could help focus the jury on the facts relevant to the issues it will have to decide. If this is done, the instructions intended to be given after the close of evidence could be adapted and given as preliminary instructions. This, of course, would not negate the need to give complete instructions at the close of evidence.]

A.5. Preliminary Instructions

OUTLINE OF TRIAL

The trial will now begin. First, each side may make an opening statement. An opening statement is not evidence. It is simply an outline to help you understand what that party expects the evidence will show.

The presentation of evidence will then begin. There are two standards of proof that you will apply to the evidence, depending on the issue you are deciding. On some issues, you must decide whether something is more likely true than not. On other issues you must use a higher standard and decide whether it is highly probable that something is true.

[Patent holder] will present its evidence on its contention that [some] [the] claims of the [ ] patent have been [and continue to be] infringed by [alleged infringer] [and that the infringement has been [and continues to be] willful.] To prove infringement of any claim, [patent holder] must persuade you that it is more likely than not that [alleged infringer] has infringed that claim. [To persuade you that any infringement was willful, [patent holder] must prove that it is highly probable that the infringement was willful.]

[Alleged infringer] will go next and present its evidence that the claims of the [ ] patent are invalid. To prove invalidity of any claim, [alleged infringer] must persuade you that it is highly probable that the claim is invalid. In addition to presenting its evidence of invalidity, [alleged infringer] will put on evidence responding to [patent holder]'s infringement [and willfulness] contention[s].

[Patent holder] will then return and will put on evidence responding to [alleged infringer]'s contention that the claims of the [ ] patent are invalid. [Patent holder] will also have the option to put on what is referred to as ―rebuttal" evidence to any evidence offered by [alleged infringer] of non-infringement [or lack of willfulness].

Finally, [alleged infringer] will have the option to put on ―rebuttal" evidence to any evidence offered by [patent holder] on the validity of [some] [the] claims of the [ ] patent.

[During the presentation of the evidence, the attorneys will be allowed brief opportunities to explain what they believe the evidence has shown or what they believe upcoming evidence will show. Such comments are not evidence and are being allowed solely for the purpose of helping you understand the evidence.]

Because the evidence is introduced piecemeal, you need to keep an open mind as the evidence comes in and wait for all the evidence before you make any decisions. In other words, you should keep an open mind throughout the entire trial.

After the evidence has been presented, [the attorneys will make closing arguments and I will give you final instructions on the law that applies to the case] [I will give you final instructions on the law that applies to the case and the attorneys will make closing arguments]. Closing

arguments are not evidence. After the [closing arguments and instructions] [instructions and closing arguments], you will then decide the case.

B.1. Summary of Contentions

SUMMARY OF CONTENTIONS

I will first give you a summary of each side's contentions in this case. I will then tell you what each side must prove to win on each of its contentions. As I previously told you, [patent holder] seeks money damages from [alleged infringer] for allegedly infringing the [ ] patent by [making,] [importing,] [using,] [selling] and [offering for sale] [products] [methods] that [patent holder] argues are covered by claims [ ] of the patent. These are the asserted claims of the [ ] patent. [Patent holder] also argues that [alleged infringer] has [actively induced infringement of these claims of the [ ] patent by others] [contributed to the infringement of these claims of the [ ] patent by others]. The [products] [methods] that are alleged to infringe are [list of accused products or methods].

[Alleged infringer] denies that it has infringed the asserted claims of the patent and argues that, in addition, claims [ ] are invalid. [Add other defenses if applicable.]

Your job is to decide whether the asserted claims of the [ ] patent have been infringed and whether any of the asserted claims of the [ ] patent are invalid. If you decide that any claim of the patent has been infringed and is not invalid, you will then need to decide any money damages to be awarded to [patent holder] to compensate it for the infringement. [You will also need to make a finding as to whether the infringement was willful. If you decide that any infringement was willful, that decision should not affect any damage award you make. I will take willfulness into account later.]

B.2. Claim Construction

2.1 INTERPRETATION OF CLAIMS

I have interpreted the meaning of some of the language in the patent claims involved in this case. You must accept those interpretations as correct. My interpretation of the language should not be taken as an indication that I have a view regarding the issues of infringement and invalidity. The decisions regarding infringement and invalidity are yours to make.

[Court gives its claim interpretation. This instruction must be coordinated with instruction 3.5 ―Means-Plus-Function Claims—Literal Infringement" if the claims at issue include means-plus-function limitations.]

Authorities

Markman v. Westview Instruments, Inc., 517 U.S. 370, 384-391 (1996); *Pitney Bowes, Inc. v. Hewlett-Packard Co.*, 182 F.3d 1298, 1304-13 (Fed. Cir. 1999); *Cybor Corp. v. FAS Techs.*, 138 F.3d 1448 (Fed. Cir. 1998) (*en banc*)*; Markman v. Westview Instruments, Inc.*, 52 F.3d 967, 977 (Fed. Cir. 1995) (*en banc*).

B.3. Infringement

3.1 INFRINGEMENT – BURDEN OF PROOF

I will now instruct you on the rules you must follow in deciding whether [patent holder] has proven that [alleged infringer] has infringed one or more of the asserted claims of the [ ] patent. To prove infringement of any claim, [patent holder] must persuade you that it is more likely than not that [alleged infringer] has infringed that claim.

Authorities

Warner-Lambert Co. v. Teva Pharm. USA, Inc., 418 F.3d 1326, 1341 n.15 (Fed. Cir. 2005); *Seal-Flex, Inc. v. Athletic Track and Court Constr.,* 172 F.3d 836, 842 (Fed. Cir. 1999); *Morton Int'l, Inc. v. Cardinal Chem. Co.*, 5 F.3d 1464, 1468-69 (Fed. Cir. 1993).

B.3. Infringement

3.2 DIRECT INFRINGEMENT

A patent's claims define what is covered by the patent. A [product] [method] directly infringes a patent if it is covered by at least one claim of the patent.

Deciding whether a claim has been directly infringed is a two-step process. The first step is to decide the meaning of the patent claim. I have already made this decision, [and I will instruct you later as to the meaning of the asserted patent claims] [and I have already instructed you as to the meaning of the asserted patent claims]. The second step is to decide whether [alleged direct infringer] has [made,] [used,] [sold,] [offered for sale] or [imported] within the United States a [product] [method] covered by a claim of the [ ] patent.[1] You, the jury, make this decision.

[With one exception,] you must consider each of the asserted claims of the patent individually, and decide whether [alleged direct infringer]'s [product] [method] infringes that claim. [The one exception to considering claims individually concerns dependent claims. A dependent claim includes all of the requirements of a particular independent claim, plus additional requirements of its own. As a result, if you find that an independent claim is not infringed, you must also find that its dependent claims are not infringed. On the other hand, if you find that an independent claim has been infringed, you must still separately decide whether the additional requirements of its dependent claims have also been infringed.]

There are two ways in which a patent claim may be directly infringed. A claim may be "literally" infringed, or it may be infringed under the "doctrine of equivalents." The following instructions will provide more detail on these two types of direct infringement. [You should note, however, that what are called "means-plus-function" requirements in a claim are subject to different rules for deciding direct infringement. These separate rules apply to claims [ ]. I will describe these separate rules shortly.]

<u>Authorities</u>

35 U.S.C. § 271; *Warner-Jenkinson Co., Inc. v. Hilton Davis Chem. Co.*, 520 U.S. 17 (1997); *Cross Med. Prods., Inc. v. Medtronic Sofamor Danek, Inc.*, 424 F.3d 1293, 1310-11 (Fed. Cir. 2005); *DeMarini Sports, Inc. v. Worth, Inc.*, 239 F.3d 1314, 1330-34 (Fed. Cir. 2001); *Seal-Flex, Inc. v. Athletic Track and Court Constr.,* 172 F.3d 836, 842 (Fed. Cir. 1999); *Carroll Touch, Inc. v. Electro Mech. Sys., Inc.*, 15 F.3d 1573, 1576 (Fed. Cir. 1993).

[1] Consistent with the policy of these instructions not to propose instructions on issues that arise only rarely, we have not proposed instructions on international infringement under sections 35 U.S.C. 271(f) and (g). If those issues arise, the reference in this instruction to infringement "within the United States" should be modified accordingly. See *Microsoft Corp. v. AT&T Corp.*, 127 S.Ct. 1746 (2007); *Bayer AG v. Housey Pharms. Inc.*, 340 F.3d 1367 (Fed. Cir. 2003).

B.3. Infringement

3.3 LITERAL INFRINGEMENT

To decide whether [alleged infringer]'s [product] [method] literally infringes a claim of the [ ] patent, you must compare that [product] [method] with the patent claim and determine whether every requirement of the claim is included in that [product] [method]. If so, [alleged infringer]'s [product] [method] literally infringes that claim. If, however, [alleged infringer]'s [product] [method] does not have every requirement in the patent claim, [alleged infringer]'s [product] [method] does not literally infringe that claim. You must decide literal infringement for each asserted claim separately.

[If [alleged infringer's] [product] [method] does not itself include every requirement in the patent claim, [alleged infringer] cannot be liable for infringement merely because other parties supplied the missing elements, unless [accused infringer] directed or controlled the acts by those parties.]

Authorities

MicroStrategy Inc. v. Business Objects, S.A., 429 F.3d 1344, 1352-53 (Fed. Cir. 2005); *Netword, LLC v. Centraal Corp.,* 242 F.3d 1347, 1353 (Fed. Cir. 2001); *Cole v. Kimberly-Clark Corp.,* 102 F.3d 524, 532 (Fed. Cir. 1996); *Cross Med. Prods. v. Medtronic Sofamor Danek*, 424 F.3d 1293 (Fed. Cir. 2005); *On Demand Machine Corp. v. Ingram Industries, Inc.,* 442 F.3d 1331 (Fed. Cir. 2006); *BMC Res., Inc. v. Paymentech, L.P.,* 2007 U.S. App. LEXIS 22413 (Fed. Cir. 2007).

3.4 INFRINGEMENT UNDER THE DOCTRINE OF EQUIVALENTS

If you decide that [alleged infringer]'s [product] [method] does not literally infringe an asserted patent claim, you must then decide whether that [product] [method] infringes the asserted claim under what is called the ~~"~~doctrine of equivalents."

Under the doctrine of equivalents, the [product] [method] can infringe an asserted patent claim if it includes [parts] [steps] that are identical or equivalent to the requirements of the claim. If the [product] [method] is missing an identical or equivalent [part] [step] to even one requirement of the asserted patent claim, the [product] [method] cannot infringe the claim under the doctrine of equivalents. Thus, in making your decision under the doctrine of equivalents, you must look at each individual requirement of the asserted patent claim and decide whether the [product] [method] has either an identical or equivalent [part] [step] to that individual claim requirement.

A [part] [step] of a [product] [method] is equivalent to a requirement of an asserted claim if a person of ordinary skill in the field would think that the differences between the [part] [step] and the requirement were not substantial as of the time of the alleged infringement.

[One way to decide whether any difference between a requirement of an asserted claim and a [part] [step] of the [product] [method] is not substantial is to consider whether, as of the time of the alleged infringement, the [part] [step] of the [product] [method] performed substantially the same function, in substantially the same way, to achieve substantially the same result as the requirement in the patent claim.]

[In deciding whether any difference between a claim requirement and the [product] [method] is not substantial, you may consider whether, at the time of the alleged infringement, persons of ordinary skill in the field would have known of the interchangeability of the [part] [step] with the claimed requirement. The known interchangeability between the claim requirement and the [part] [step] of the [product] [method] is not necessary to find infringement under the doctrine of equivalents. However, known interchangeability may support a conclusion that the difference between the [part] [step] in the [product] [method] and the claim requirement is not substantial. The fact that a [part] [step] of the [product] [method] performs the same function as the claim requirement is not, by itself, sufficient to show known interchangeability.]

[You may not use the doctrine of equivalents to find infringement if you find that [alleged infringer]'s [product] [method] is the same as what was in the prior art before the application for the [ ] patent or what would have been obvious to persons of ordinary skill in the field in light of what was in the prior art. A patent holder may not obtain, under the doctrine of equivalents, protection that it could not have lawfully obtained from the Patent and Trademark Office.][2]

[2] If this instruction is applicable in a given case, then the court should instruct the jury that if [alleged infringer] has offered evidence sufficient to show that the accused [product] [method] is in the prior art, the burden shifts to the [patent holder] to prove that what it attempts to cover under the doctrine of equivalents is not in the prior art or would not have been obvious from the prior art. *See Fiskares, Inc. v. Hunt Mfg. Co.*, 221 F.3d 1318, 1323 (Fed. Cir. 2000); *Ultra-Tex Surfaces, Inc. v. Hill Bros. Chem. Co.*, 204 F.3d 1360, 1364-66 (Fed. Cir. 2000); *Streamfeeder, LLC v. Sure-Feed Systems, Inc.*, 175 F.3d 974, 981-84 (Fed. Cir. 1999).

[You may not use the doctrine of equivalents to find infringement if you find that the subject matter alleged to be equivalent to a requirement of the patent claim was described in the [ ] patent but not covered by any of its claims. The subject matter described but not claimed must be specific enough that one of ordinary skill in the art would understand that it was present in the patent.]

Authorities

Warner-Jenkinson Co., Inc. v. Hilton Davis Chem. Co., 520 U.S. 17 (1997); *Graver Tank & Mfg. Co. v. Linde Air Prods. Co.*, 339 U.S. 605, 609 (1950); *Abraxis Bioscience, Inc. v. Mayne Pharma (USA) Inc.*, 467 F.3d 1370, 1379-82 (Fed. Cir. 2006); *Pfizer, Inc. v. Teva Pharms., USA, Inc.*, 429 F.3d 1364, 1378 (Fed. Cir. 2005); *Johnson & Johnston Assoc. v. R.E. Service Co.*, 285 F.3d 1046 (Fed. Cir. 2002) (*en banc*); *Multiform Desiccants, Inc. v. Medzam, Ltd.*, 133 F.3d 1473, 1480 (Fed. Cir. 1998); *Dolly, Inc. v. Spalding & Evenflo Cos.*, 16 F.3d 394, 397 (Fed. Cir. 1994).

B.3. Infringement

3.5 MEANS-PLUS-FUNCTION CLAIMS – LITERAL INFRINGEMENT[3]

I will now describe the separate rules that apply to ―means-plus-function" requirements that are used in some claims. Claims [ ] in the [ ] patent contain ―means-plus-function" requirements. A means-plus-function requirement only covers the specific [structure] disclosed in a patent specification for performing the claimed function and the equivalents of those specific [structure] that perform the claimed function. A means-plus-function requirement does not cover all possible [structure] that could be used to perform the claimed function.

For purposes of this trial, I have interpreted each means-plus-function requirement for you and identified the [structure] in the patent specification that correspond to these means-plus-function requirements. Specifically, I have determined that:

> [X. [ ] is [are] the [structure] that perform[s] the [ ] function identified in the means-plus-function requirement of claim [ ].]
>
> [X. [ ] is [are] the [structure] that perform[s] the [ ] function identified in the means-plus-function requirement of claim [ ].]

In deciding if [patent holder] has proven that [alleged infringer]'s [product] includes structure covered by a means-plus-function requirement, you must first decide whether the [product] has any structure that performs the function I just described to you. If not, the claim containing that means-plus-function requirement is not infringed.

If you find that the [alleged infringer]'s [accused product] does have structure that performs the claimed function, you must next identify the [structure] in [alleged infringer]'s [accused product] that perform[s] this function. After identifying that [structure], you must then determine whether that [structure] is the same as or equivalent to the [structure] I have identified. If they are the same or equivalent, the means-plus-function requirement is satisfied by that structure of the [accused product]. If all the other requirements of the claim are satisfied by structures found in the [accused product], the [accused product] infringes the claim.

In order to prove that [a structure] in the [accused product] is equivalent to the [structure] in the [ ] patent, the [patent holder] must show that a person of ordinary skill in the field would have considered that the differences between the [structure] described in the [ ] patent and the [structure] in the [accused product] are not substantial. The [patent holder] must also show that the [structure] was available on the date the [ ] patent was granted.[4]

---

[3] If a claim at issue is a method claim with a limitation written in ―step-plus-function" format, this instruction should be modified accordingly, for example, substituting ―acts" for ―structure."

[4] There is an important difference between what can be an equivalent under § 112(6) and what can be an equivalent under the doctrine of equivalents. An equivalent structure or act under § 112(6) cannot embrace technology developed after the issuance of the patent because the literal meaning of a claim is fixed upon its issuance. *Chiuminatta Concrete Concepts, Inc. v. Cardinal Indus., Inc.*, 145 F.3d 1303, 1310 (Fed. Cir. 1998); *Al-Site Corp. v. VSI Int'l, Inc.*, 174 F.3d 1308, 1320 (Fed. Cir. 1999). Although new matter cannot be added to a patent application after it has been filed, current Federal Circuit law nevertheless uses the patent issuance date, as opposed to the

Authorities

35 U.S.C. § 112(6); *Frank's Casing Crew & Rental Tools, Inc. v. Weatherford Intern., Inc.*, 389 F.3d 1370, 1378 (Fed. Cir. 2004); *Odetics, Inc. v. Storage Tech. Corp.*, 185 F.3d 1259, 1266 (Fed. Cir. 1999); *Chiuminatta Concrete Concepts, Inc. v. Cardinal Indus., Inc.*, 145 F.3d 1303, 1307 (Fed. Cir. 1998); *Micro Chem., Inc. v. Great Plains Chem. Co., Inc.*, 103 F.3d 1538, 1547 (Fed. Cir. 1997); *Valmont Indus., Inc. v. Reinke Mfg. Co., Inc.*, 983 F.2d 1039, 1042 (Fed. Cir. 1993).

effective filing date, to distinguish what constitutes an "after arising equivalent." An after arising equivalent infringes, if at all, under the doctrine of equivalents and could infringe under the doctrine of equivalents without infringing literally under § 112(6). Furthermore, under § 112(6) the accused device must perform the identical function as recited in the claim element while the doctrine of equivalents may be satisfied when the function performed by the accused device is only substantially the same. *Al-Site*, 174 F3d. at 1320-21.

3.6 MEANS-PLUS-FUNCTION CLAIMS – INFRINGEMENT UNDER THE DOCTRINE OF EQUIVALENTS

[No model instruction is provided since an instruction on this subject is necessarily case specific. However, a means-plus-function requirement can be met under the doctrine of equivalents if the function is not the same but is equivalent (*see*, *e.g.*, *WMS Gaming Inc. v. Int'l Game Tech.,* 184 F.3d 1339, 1353 (Fed. Cir. 1999) or the corresponding structure in the accused product is later developed technology. *See Chiuminatta Concrete Concepts, Inc. v. Cardinal Indus., Inc.*, 145 F.3d 1303, 1310 (Fed. Cir. 1998); *Al-Site Corp. v. VSI Int'l, Inc.*, 174 F.3d 1308, 1320 (Fed. Cir. 1999).]

B.3. Infringement

3.7 LIMITATIONS ON THE DOCTRINE OF EQUIVALENTS

Because [patent holder] made certain claim changes or statements during the patent application process for the [ ] patent, the doctrine of equivalents analysis cannot be applied to the following requirements of the asserted claims:

[List requirements on a claim-by-claim basis]

Unless each of these requirements is literally present within the [alleged infringer]'s [product] [method], there can be no infringement of the claim.

Authorities

Honeywell Int'l Inc. v. Hamilton Sundstrand Corp., 370 F.3d 1131 (Fed. Cir. 2004) (*en banc*); *Festo Corp. v. Shoketsu Kinzoku Kogyo Kabushiki Co., Ltd.*, 344 F.3d (Fed. Cir. 2003) (*en banc*).

B.3. Infringement

3.8 INDIRECT INFRINGEMENT – GENERALLY[5]

[Patent holder] [also] argues that [alleged infringer] [contributed to infringement by another of] [and] [or] [induced another to infringe] claims [ ] of the [ ] patent. [[Patent holder] has not argued that the [product] [method] made, used, sold, offered for sale or imported by [alleged infringer] includes all of the requirements of an asserted patent claim.] [Alleged infringer] cannot [contributorily infringe] [or] [induce infringement] unless [patent holder] proves that someone other than [alleged infringer] directly infringes the patent claim by making, using, selling, offering for sale or importing a [product] [method] that includes all of the requirements of the asserted claims. If there is no direct infringement, [alleged infringer] cannot have [contributed to infringement] [or] [induced infringement].

Authorities

Hewlett-Packard Co. v. Bausch & Lomb, Inc., 909 F.2d 1464, 1468-69 (Fed. Cir. 1990).

[5] These instructions are written for the usual case in which the alleged infringer is accused of contributing to or inducing direct infringement by another. They are not appropriate for cases in which the alleged infringer induced another to take some action that itself only contributed to infringement. Nor are they appropriate for cases in which the patent claim requires two or more people to act in concert in order to infringe. The Committee expresses no opinion as to whether such conduct gives rise to a legally viable assertion of contributory or inducement of infringement.

3.9 CONTRIBUTORY INFRINGEMENT

[Patent holder] [also] argues that [alleged infringer] has contributed to infringement by another. Contributory infringement may arise when someone supplies something that is used to infringe one or more of the patent claims.

In order for there to be contributory infringement by [alleged infringer], someone other than [alleged infringer] must directly infringe a claim of the [ ] patent; if there is no direct infringement by anyone, there can be no contributory infringement.

If you find someone has directly infringed the [ ] patent, then contributory infringement exists if:

(1) [Alleged infringer] supplied an important component of the infringing part of the [product] or [method];

(2) The component is not a common component suitable for non-infringing use; and

(3) [Alleged infringer] supplied the component with the knowledge of the [ ] patent and knowledge that the component was especially made or adapted for use in an infringing manner.

Authorities

35 U.S.C. § 271(c); *Aro Mfg. Co. v. Convertible Top Replacement Co.*, 377 U.S. 476 (1964); *DSU Med. Corp. v. JMS Co.*, 471 F.3d 1293, 1303 (Fed. Cir. 2006); *Mentor H/S, Inc. v. Med. Device Alliance, Inc*., 244 F.3d 1365 (Fed. Cir. 2001); *Hewlett-Packard Co. v. Bausch & Lomb, Inc.*, 909 F.2d 1464, 1469 (Fed. Cir. 1990); *Preemption Devices, Inc. v. Minn. Mining & Mfr. Co.*, 803 F.2d 1170, 1174 (Fed. Cir. 1986).

3.10 INDUCING PATENT INFRINGEMENT

[Patent holder] argues that [alleged infringer] has actively induced another to infringe the [ ] patent. In order for there to be inducement of infringement by [alleged infringer], someone else must directly infringe a claim of the [ ] patent; if there is no direct infringement by anyone, there can be no induced infringement. In order to be liable for inducement of infringement, [alleged infringer] must:

1. have intentionally taken action that actually induced direct infringement by another;

2. have been aware of the [ ] patent; and

3. have known or should have known that its actions would cause direct infringement by another.

In order to prove induced infringement, [patent holder] must either prove that the [accused product] necessarily infringes the [patent in suit] or prove acts of direct infringement by others that were induced by [accused infringer]. [Patent holder] must further prove the number of direct acts of infringement of the [patent in suit] because the amount of damages for induced infringements is limited by the number of specific instances of direct infringement.

Authorities

35 U.S.C. § 271(b); *Acco Brands, Inc. v. ABA Locks Mfr. Co., Ltd.*, 2007 U.S. App LEXIS 21822 (Fed. Cir. 2007); *DSU Med. Corp. v. JMS Co.*, 471 F.3d 1293, 1304-06 (Fed. Cir. 2006) (*en banc*) (quoting *Metro-Goldwyn-Mayer Studios Inc. v. Grokster, Ltd.*, 545 U.S. 913, 936 (2005)); *Metabolite Labs., Inc. v. Lab. Corp. of Am.*, 370 F.3d 1354, 1365 (Fed. Cir. 2004); *Dynacore Holdings Corp. v. U.S. Philips Corp.,* 363 F.3d 1263, 1274-76 (Fed. Cir. 2004); *Ferguson Beauregard/Logic Controls, Division of Dover Resources, Inc. v. Mega Systems, LLC*, 350 F.3d 1327, 1342 (Fed. Cir. 2003).

B.3. Infringement

3.11 WILLFUL INFRINGEMENT

In this case, [patent holder] argues that [alleged infringer] willfully infringed the [patent holder]'s patent.

To prove willful infringement, [patent holder] must first persuade you that the [alleged infringer] infringed a valid and enforceable claim of the [patent holder]'s patent. The requirements for proving such infringement were discussed in my prior instructions.

In addition, to prove willful infringement, the [patent holder] must persuade you that it is highly probable that [prior to the filing date of the complaint][6], [alleged infringer] acted with reckless disregard of the claims of the [patent holder]'s [patent].

To demonstrate such ~~"r~~eckless disregard," [patent holder] must satisfy a two-part test. The first part of the test is objective. The [patent holder] must persuade you that the [alleged infringer] acted despite an objectively high likelihood that its actions constituted infringement of a valid and enforceable patent. The state of mind of the [alleged infringer] is not relevant to this inquiry. Rather, the appropriate inquiry is whether the defenses put forth by [alleged infringer], fail to raise any substantial question with regard to infringement, validity or enforceability. Only if you conclude that the defenses fail to raise any substantial question with regard to infringement, validity or enforceability, do you need to consider the second part of the test.

The second part of the test does depend on the state of mind of the [alleged infringer]. The [patent holder] must persuade you that [alleged infringer] actually knew, or it was so obvious that [alleged infringer] should have known, that its actions constituted infringement of a valid and enforceable patent.

In deciding whether [alleged infringer] acted with reckless disregard for [patent holder]'s patent, you should consider all of the facts surrounding the alleged infringement including, but not limited to, the following:

(1) Whether [alleged infringer] acted in a manner consistent with the standards of commerce for its industry; [and]

(2) Whether [alleged infringer] intentionally copied a product of [patent holder] covered by the patent[.] [;and]

(3) Whether [alleged infringer] relied on a legal opinion that was well-supported and believable and that advised [alleged infringer] (1) that the [product] [method] did

[6] This bracketed language should ordinarily be included as the Federal Circuit has made clear that, in ordinary circumstances, willfulness will depend on an infringer's prelitigation conduct. *In re Seagate Technology, LLC*, 2007 U.S. App. LEXIS 19768 (Fed. Cir. Aug. 20, 2007).

not infringe [patent holder]'s patent or (2) that the patent was invalid [or unenforceable].][7]

Authorities

35 U.S.C. § 284; In re Seagate Tech., LLC, 2007 U.S. App. LEXIS 19768 (Fed. Cir. Aug. 20, 2007); *Knorr-Bremse Systeme Fuer Nutzfahrzeuge GmbH v. Dana Corp.*, 383 F.3d 1337, 1345 (Fed. Cir. 2004) (*en banc*); *Crystal Semiconductor Corp. v. Tritech Microelectronics Int'l, Inc.,* 246 F.3d 1336, 1346 (Fed. Cir. 2001); *WMS Gaming Inc. v. Int'l Game Tech.*, 184 F.3d 1339, 1354 (Fed. Cir. 1999); *Read Corp. v. Portec, Inc*., 970 F.2d 816 (Fed. Cir. 1992); *Gustafson, Inc. v. Intersystems Indus. Prods., Inc.,* 897 F.2d 508, 510 (Fed. Cir. 1990).

[7] This bracketed language should only be included if the alleged infringer relies on advice of counsel. There is no affirmative obligation to obtain opinion of counsel. *In re Seagate Technology, LLC*, 2007 U.S. App. LEXIS 19768 (Fed. Cir. Aug. 20, 2007).

B.4.1 Validity

4.1 INVALIDITY – BURDEN OF PROOF

I will now instruct you on the rules you must follow in deciding whether [alleged infringer] has proven that claims [ ] of the [ ] patent are invalid. Before discussing the specific rules, I want to remind you about the standard of proof that applies to this defense. To prove invalidity of any patent claim, [alleged infringer] must persuade you that it is highly probable that the claim is invalid.

Authorities

Buildex, Inc. v. Kason Indus., Inc., 849 F.2d 1461, 1463 (Fed. Cir. 1988); *Hybritech, Inc. v. Monoclonal Antibodies, Inc.*, 802 F.2d 1367, 1375 (Fed. Cir. 1986).

4.2a WRITTEN DESCRIPTION REQUIREMENT

[Alleged infringer] can meet its burden of proving that a patent claim is invalid by showing that the patent does not contain an adequate written description of the claimed invention. The purpose of this written description requirement is to make sure that a patent describes the technology it seeks to claim as an invention and to demonstrate that the inventor was in possession of the invention at the time the application for the patent was filed, even though the claims may have been changed or new claims added since that time. The written description requirement is satisfied if a person of ordinary skill in the field reading the patent application as originally filed would recognize that the patent application described the invention as claimed, even though the description may not use the exact words found in the claim. A requirement in a claim need not be specifically disclosed in the patent application as originally filed if a person of ordinary skill would understand that the missing requirement is necessarily implied in the patent application as originally filed.

Authorities

35 U.S.C. § 112(1) and (2); *Kao Corp. v. Unilever U.S., Inc.*, 441 F.3d 963, 968 (Fed. Cir. 2006); *Chiron Corp. v. Genentech, Inc.*, 363 F.3d 1247 (Fed. Cir. 2004); *Purdue Pharma L.P. v. Faulding, Inc.*, 230 F.3d 1320, 1323 (Fed. Cir. 2000); *Lampi Corp. v. Am. Power Prods., Inc.*, 228 F.3d 1365, 1377-78 (Fed. Cir. 2000); *Gentry Gallery, Inc. v. Berkline Corp.*, 134 F.3d 1473, 1478-80 (Fed. Cir. 1998); *In re Alton*, 76 F.3d 1168, 1172 (Fed. Cir. 1996); *University of Rochester v. G.D. Searle & Co.,* 358 F.3d 916, 926-928 (Fed. Cir. 2004).

B.4.2 Validity—Adequacy of Patent Specification

4.2b ENABLEMENT

[Alleged infringer] can meet its burden of proving that a patent claim is invalid by showing that the patent does not contain a description of the claimed invention that is sufficiently full and clear to enable a person of ordinary skill in the field to make and use the invention. This is known as the ~~"~~enablement" requirement.

The patent may be enabling even though it does not expressly state some information if a person of ordinary skill in the field could make and use the invention without having to do excessive experimentation. In determining whether excessive experimentation is required, you may consider the following factors:

the scope of the claimed invention;

the amount of guidance presented in the patent;

the amount of experimentation necessary;

the time and cost of any necessary experimentation;

how routine any necessary experimentation is in the field of [identify field];

whether the patent discloses specific working examples of the claimed invention;

the nature and predictability of the field; and

the level of ordinary skill in the field of [identity field].

The question of whether a patent is enabling is judged as of the date the original application for the patent was first filed.[8]

<u>Authorities</u>

35 U.S.C. § 112(1); *AK Steel Corp. v. Sollac & Ugine*, 344 F.3d 1234, 1244 (Fed. Cir. 2003); *Union Pac. Resources Co. v. Chesapeake Energy Corp.*, 236 F.3d 684, 690-92 (Fed. Cir. 2001); *Ajinomoto Co. v. Archer-Daniels-Midland Co.*, 228 F.3d 1338, 1345-46 (Fed. Cir. 2000); *In re Wands*, 858 F.2d 731, 737 (Fed. Cir. 1988).

[8] Where a claim is the result of a continuation-in-part application and the priority date is disputed, this language will need to be revised to reflect the concept of effective filing date.

4.2c BEST MODE

[Alleged infringer] can meet its burden of proving that a patent claim is invalid by showing that the patent does not disclose what [the inventor] [any of the inventors] believed was the best way to carry out the claimed invention at the time the patent application was filed. This is known as the ~~"~~best mode" requirement. It ensures that the public obtains a full disclosure of the best way to carry out the claimed invention known to [the inventor] [any of the inventors] at the time the [original] patent application was first filed. The disclosure of the best mode must be detailed enough to enable the persons of ordinary skill in the field of [identity] field to carry out that best mode without excessive experimentation.

The best mode requirement focuses on what [the inventor] [any of the inventors] believed at the time the [original] patent application was first filed. It does not matter whether the best mode contemplated by [the inventor] [any of the inventors] was, in fact, the best way to carry out the invention. The question is whether the patent includes what [the inventor] [any of the inventors] believed was the best mode at the time the [original] patent application was filed. If [the inventor did not believe] [none of the inventors believed] there was a best way to carry out the invention at the time that application was filed, there is no requirement that the patent describe a best mode. Although a patent specification must disclose the best mode, it may disclose other modes as well and need not state which of the modes disclosed is best. If [the inventor] [any of the inventors] believed there was a best way to carry out the invention and the patent does not disclose it, the patent is invalid.

<u>Authorities</u>

35 U.S.C. § 112(1); *Glaxo Inc. v. Novopharm Ltd.*, 52 F.3d 1043, 1049-52 (Fed. Cir. 1995); *Transco Prods. v. Performance Contracting*, 38 F.3d 551 (Fed. Cir. 1994); *Wahl Instruments v. Acvious*, 950 F.2d 1575 (Fed. Cir. 1991); *Chemcast Corp. v. Arco Indus. Corp.*, 913 F.2d 923, 926-28 (Fed. Cir. 1990); *Spectra-Physics Inc. v. Coherent, Inc.*, 827 F.2d 1524 (Fed. Cir. 1987).

B.4.3 Validity—The Claims

4.3a1 ANTICIPATION

A patent claim is invalid if the claimed invention is not new. For the claim to be invalid because it is not new, all of its requirements must have existed in a single device or method that predates the claimed invention, or must have been described in a single previous publication or patent that predates the claimed invention. In patent law, these previous devices, methods, publications or patents are called ―prior art references." If a patent claim is not new we say it is ―anticipated" by a prior art reference.

The description in the written reference does not have to be in the same words as the claim, but all of the requirements of the claim must be there, either stated or necessarily implied, so that someone of ordinary skill in the field of [identify field] looking at that one reference would be able to make and use the claimed invention.

Here is a list of the ways that [alleged infringer] can show that a patent claim was not new [use those that apply to this case]:

> [– if the claimed invention was already publicly known or publicly used by others in the United States before [insert date of conception unless at issue];]
>
> [– if the claimed invention was already patented or described in a printed publication anywhere in the world before [insert date of conception unless at issue]. [A reference is a ―printed publication" if it is accessible to those interested in the field, even if it is difficult to find.];]
>
> [– if the claimed invention was already made by someone else in the United States before [insert date of conception unless in issue], if that other person had not abandoned the invention or kept it secret;]
>
> [– if the claimed invention was already described in another issued U.S. patent or published U.S. patent application that was based on a patent application filed before [insert date of the patent holder's application filing date] [or] [insert date of conception unless at issue];]
>
> [– if [named inventor] did not invent the claimed invention but instead learned of the claimed invention from someone else;]
>
> [– if the [patent holder] and [alleged infringer] dispute who is a first inventor, the person who first conceived of the claimed invention and first reduced it to practice is the first inventor. If one person conceived of the claimed invention first, but reduced to practice second, that person is the first inventor only if that person (a) began to reduce the claimed invention to practice before the other party conceived of it and (b) continued to work diligently to reduce it to practice. [A claimed invention is ―reduced to practice" when it has been tested sufficiently to show that it will work for its intended purpose or when it is fully described in a filed patent application].]

[Since it is in dispute, you must determine a date of conception for the [claimed invention] [and/or] [prior invention]. Conception is the mental part of an inventive act and is proven when the invention is shown in its complete form by drawings, disclosure to another or other forms of evidence presented at trial.]

Authorities

35 U.S.C. § 102(a), (c), (e), (f) and (g); *Apotex U.S.A., Inc. v. Merck & Co*., 254 F.3d 1031, 1035 (Fed. Cir. 2001); *Mycogen Plant Science, Inc. v. Monsanto Co.*, 243 F.3d 1316, 1330 (Fed. Cir. 2001); *Ecolochem, Inc. v. S. Cal. Edison Co.*, 227 F.3d 1361, 1367-70 (Fed. Cir. 2000); *Singh v. Brake*, 222 F.3d 1362, 1366-70 (Fed. Cir. 2000); *Pannu v. Iolab Corp.*, 155 F.3d 1344, 1349 (Fed. Cir. 1998); *Gambro Lundia AB v. Baxter Healthcare Corp.*, 110 F.3d 1573, 1576-78 (Fed. Cir. 1997); *Lamb-Weston, Inc. v. McCain Foods, Ltd.*, 78 F.3d 540, 545 (Fed. Cir. 1996); *In re Bartfeld*, 925 F.2d 1450 (Fed. Cir. 1985); *Ralston Purina Co. v. Far-Mar-Co, Inc.*, 772 F.2d 1570, 1574 (Fed. Cir. 1985); *American Stock Exch., LLC v. Mopies*, 250 F. Supp. 2d 323 (S.D.N.Y. 2003); *In re Wyer*, 655 F.2d 221, 226 (C.C.P.A. 1981).

4.3a2 STATUTORY BARS

A patent claim is invalid if the patent application was not filed within the time required by law. This is called a ~~"~~statutory bar." For a patent claim to be invalid by a statutory bar, all of its requirements must have been present in one prior art reference dated more than one year before the patent application was filed. Here is a list of ways [alleged infringer] can show that the patent application was not timely filed: [choose those that apply]

> [– if the claimed invention was already patented or described in a printed publication anywhere in the world before [insert date that is one year before effective filing date of patent application]. [A reference is a ~~"~~printed publication" if it is accessible to those interested in the field, even if it is difficult to find.];]
>
> [– if the claimed invention was already being openly used in the United States before [insert date that is one year before application filing date] and that use was not primarily an experimental use (a) controlled by the inventor, and (b) to test whether the invention worked for its intended purpose;]
>
> [– if a device or method using the claimed invention was sold or offered for sale in the United States, and that claimed invention was ready for patenting, before [insert date that is one year before application filing date]. [The claimed invention is not being [sold] [or] [offered for sale] if the [patent holder] shows that the [sale] [or] [offer for sale] was primarily experimental.] [The claimed invention is ready for patenting if it was actually built, or if the inventor had prepared drawings or other descriptions of the claimed invention that were sufficiently detailed to enable a person of ordinary skill in the field to make and use the invention based on them.];]
>
> [– if the [patent holder] had already obtained a patent on the claimed invention in a foreign country before filing the original U.S. application, and the foreign application was filed at least one year before the U.S. application.]

For a claim to be invalid because of a statutory bar, all of the claimed requirements must have been either (1) disclosed in a single prior art reference, (2) implicitly disclosed in a reference to one skilled in the field, or (3) must have been present in the reference, whether or not that was understood at the time. The disclosure in a reference does not have to be in the same words as the claim, but all the requirements must be there, either described in enough detail or necessarily implied, to enable someone of ordinary skill in the field of [identify field] looking at the reference to make and use the claimed invention.

<u>Authorities</u>

35 U.S.C. § 102(b) and (d); *Pfaff v. Wells Elec. Inc.*, 525 U.S. 55 (1998); *Schering Corp. v. Geneva Pharms.,* 339 F.2d 1273 (Fed Cir. 2003); *Helifix Ltd. v. Blok-Lok, Ltd*., 208 F.3d 1339, 1346 (Fed. Cir. 2000); *Abbot Labs. v. Geneva Pharms., Inc.*, 182 F.3d 1315, 1318 (Fed. Cir.

1999); *Finnigan Corp. v. Int'l Trade Comm'n*, 180 F.3d 1354 (Fed. Cir. 1999); *J.A. LaPorte, Inc. v. Norfolk Dredging Co*., 787 F.2d 1577, 1581 (Fed. Cir. 1986); *In re Hall*, 781 F.2d 897, 898-99 (Fed. Cir. 1986); *D.L. Auld Co. v. Chroma Graphics Corp*., 714 F.2d 1144, 1150 (Fed. Cir. 1983).

4.3b OBVIOUSNESS[9] – (Alternative 1)

Not all innovations are patentable. A patent claim is invalid if the claimed invention would have been obvious to a person of ordinary skill in the field [at the time the application was filed][as of [insert date]]. The court, however, is charged with the responsibility of making the determination as to whether a patent claim was obvious based upon your determination of several factual questions. First, you must decide the level of ordinary skill in the field that someone would have had at the time the claimed invention was made. Second, you must decide the scope and content of the prior art. Third, you must decide what difference, if any, existed between the claimed invention and the prior art. Finally, you must determine which, if any, of the following factors have been established by the evidence:

[(1) commercial success of a product due to the merits of the claimed invention];]

[(2) a long felt need for the solution provided by the claimed invention];]

[(3) unsuccessful attempts by others to find the solution provided by the claimed invention[;]

[(4) copying of the claimed invention by others];]

[(5) unexpected and superior results from the claimed invention]]

[(6) acceptance by others of the claimed invention as shown by praise from others in the field or from the licensing of the claimed invention];]

[(7) other evidence tending to show nonobviousness];]

[(8) independent invention of the claimed invention by others before or at about the same time as the named inventor thought of it]; and]

[(9) other evidence tending to show obviousness].]

[9] This instruction provides the jury with an instruction on the underlying factual questions it must answer to enable the court to make the ultimate legal determination of the obviousness question. The court, not the jury, should make the legal conclusion on the obviousness question based on underlying factual determinations made by the jury. *KSR Intern, Co. v. Teleflex, Inc.,* 127 S.Ct. 1727, 1745 (2007)("The ultimate judgment of obviousness is a legal determination."); *see Dippin' Dots, Inc. v. Mosey*, 476 F.3d 1337, 1343 (Fed. Cir. 2007). It is anticipated that these factual issues will be presented to the jury as specifically as possible. For example, if the only dispute between the parties is whether a particular reference is with the "scope and content" of the prior art, that is the only *Graham* factor that should be presented to the jury. As another example, if the only factual dispute between the parties on the "difference between the prior art and the claimed invention" is whether a prior art reference discloses a particular claim limitation, that is the only issue that should be presented to the jury on that *Graham* factor. The introductory comment to the sample verdict form discusses further the functions of the judge and jury in determining obviousness.

Authorities

35 U.S.C. § 103; *Graham v. John Deere Co.*, 383 U.S. 1 (1966); *KSR Int'l Co. v. Teleflex, Inc.*, 550 U.S. ___ (2007); *Ruiz v. A.B. Chance Co.*, 234 F.3d 654 (Fed. Cir. 2000); *Arkie Lures, Inc. v. Gene Larew Tackle, Inc.*, 119 F.3d 953, 957 (Fed. Cir. 1997); *Specialty Composites v. Cabot Corp.*, 845 F.2d 981, 991 (Fed. Cir. 1988); *Windsurfing Int'l, Inc. v. AMF, Inc.*, 782 F.2d 995, 1000 (Fed. Cir. 1986); *Pentec. Inc. v. Graphic Controls Corp.*, 776 F.2d 309, 313 (Fed. Cir. 1985). *See Novo Nordisk A/S v. Becton Dickinson & Co.*, 304 F.3d 1216, 1219-20 (Fed. Cir. 2002).

4.3b OBVIOUSNESS[10] – (Alternative 2)

Not all innovations are patentable. A patent claim is invalid if the claimed invention would have been obvious to a person of ordinary skill in the field [at the time the application was filed] [as of [insert date]]. This means that even if all of the requirements of the claim cannot be found in a single prior art reference that would anticipate the claim or constitute a statutory bar to that claim, a person of ordinary skill in the field of [identify field] who knew about all this prior art would have come up with the claimed invention.

However, a patent claim composed of several elements is not proved obvious merely by demonstrating that each of its elements was independently known in the prior art. In evaluating whether such a claim would have been obvious, you may consider whether [the alleged infringer] has identified a reason that would have prompted a person of ordinary skill in the field to combine the elements or concepts from the prior art in the same way as in the claimed invention. There is no single way to define the line between true inventiveness on one hand (which is patentable) and the application of common sense and ordinary skill to solve a problem on the other hand (which is not patentable). For example, market forces or other design incentives may be what produced a change, rather than true inventiveness. You may consider whether the change was merely the predictable result of using prior art elements according to their known functions, or whether it was the result of true inventiveness. You may also consider whether there is some teaching or suggestion in the prior art to make the modification or combination of elements claimed in the patent. Also, you should consider whether the innovation applies a known technique that had been used to improve a similar device or method in a similar way. You may also consider whether the claimed invention would have been obvious to try, meaning that the claimed innovation was one of a relatively small number of possible approaches to the problem with a reasonable expectation of success by those skilled in the art. However, you must be careful not to determine obviousness using the benefit of hindsight; many true inventions might seem obvious after the fact. You should put yourself in the position of a person of ordinary skill in the field at the time the claimed invention was made and you should not consider what is known today or what is learned from the teaching of the patent.

The ultimate conclusion of whether a claim is obvious should be based upon your determination of several factual decisions. First, you must decide the level of ordinary skill in the field that someone would have had at the time the claimed invention was made. Second, you must decide the scope and content of the prior art. Third, you must decide what difference, if any, existed between the claimed invention and the prior art. Finally, you should consider any of the following factors that you find have been shown by the evidence:

---

[10] This instruction provides the jury with an instruction on how to analyze the obviousness question and reach a conclusion on it in the event that the Court decides to allow the jury to render an advisory verdict on the ultimate question of obviousness. However, the court, not the jury, should make the legal conclusion on the obviousness question based on underlying factual determinations made by the jury. *KSR Intern, Co. v. Teleflex, Inc.,* 127 S.Ct. 1727, 1745 (2007)("The ultimate judgment of obviousness is a legal determination."); *see Dippin' Dots, Inc. v. Mosey*, 476 F.3d 1337, 1343 (Fed. Cir. 2007). The introductory comment to the sample verdict form discusses further the functions of the judge and jury in determining obviousness.

[(1) commercial success of a product due to the merits of the claimed invention];]

[(2) a long felt need for the solution provided by the claimed invention];]

[(3) unsuccessful attempts by others to find the solution provided by the claimed invention];]

[(4) copying of the claimed invention by others];]

[(5) unexpected and superior results from the claimed invention];]

[(6) acceptance by others of the claimed invention as shown by praise from others in the field or from the licensing of the claimed invention];]

[(7) other evidence tending to show nonobviousness];]

[(8) independent invention of the claimed invention by others before or at about the same time as the named inventor thought of it] [; and]

[(9) other evidence tending to show obviousness].]

[The presence of any of the [list factors 1-7 as appropriate] may be considered by you as an indication that the claimed invention would not have been obvious at the time the claimed invention was made, and the presence of the [list factors 8-9 as appropriate] may be considered by you as an indication that the claimed invention would have been obvious at such time. Although you should consider any evidence of these factors, the relevance and importance of any of them to your decision on whether the claimed invention would have been obvious is up to you.]

Authorities

35 U.S.C. § 103; *Graham v. John Deere Co.*, 383 U.S. 1 (1966); *KSR Int'l Co. v. Teleflex, Inc.*, 550 U.S. ___ (2007); *Ruiz v. A.B. Chance Co.*, 234 F.3d 654 (Fed. Cir. 2000); *Arkie Lures, Inc. v. Gene Larew Tackle, Inc.*, 119 F.3d 953, 957 (Fed. Cir. 1997); *Specialty Composites v. Cabot Corp.*, 845 F.2d 981, 991 (Fed. Cir. 1988); *Windsurfing Int'l, Inc. v. AMF, Inc.*, 782 F.2d 995, 1000 (Fed. Cir. 1986); *Pentec. Inc. v. Graphic Controls Corp.*, 776 F.2d 309, 313 (Fed. Cir. 1985). *See Novo Nordisk A/S v. Becton Dickinson & Co.*, 304 F.3d 1216, 1219-20 (Fed. Cir. 2002).

B.4.3 Validity—The Claims

4.3bi SCOPE AND CONTENT OF PRIOR ART

[Patent holder] and [alleged infringer] disagree as to whether [identify prior art reference(s)] should be included in the prior art you use to decide the validity of claims [ ] of the [ ] patent. In order to be considered as prior art to the [ ] patent, these references must be reasonably related to the claimed invention of that patent. A reference is reasonably related if it is in the same field as the claimed invention or is from another field to which a person of ordinary skill in the field would look to solve a known problem.

Authorities

Graham v. John Deere Co., 383 U.S. 1 (1966); *KSR Int'l Co. v. Teleflex, Inc.*, 550 U.S. ___ (2007); *Ruiz v. A.B. Chance Co.*, 234 F.3d 654, 664-65 (Fed. Cir. 2000); *Wang Labs. v. Toshiba Corp.*, 993 F.2d 858, 864 (Fed. Cir. 1993).

4.3bii DIFFERENCES OVER THE PRIOR ART

In reaching your conclusion as to whether or not claim [ ] would have been obvious at the time the claimed invention was made, you should consider any difference or differences between the [identify prior art reference(s)] and the claimed requirements.

Authorities

Graham v. John Deere Co., 383 U.S. 1 (1966); *Yamanouchi Pharm. Co. v. Danbury Pharmacal, Inc.*, 231 F.3d 1339, 1343-45 (Fed. Cir. 2000); *In re Kotzab*, 217 F.3d 1365, 1369 (Fed. Cir. 2000); *Northern Telecom, Inc. v. Datapoint Corp.*, 908 F.2d 931, 935 (Fed. Cir. 1990).

4.3biii LEVEL OF ORDINARY SKILL

Several times, in my instructions, I have referred to a person of ordinary skill in the field of [identify field]. It is up to you to decide the level of ordinary skill in the field of [identify field]. You should consider all the evidence introduced at trial in making this decision, including:

(1) the levels of education and experience of persons working in the field;

(2) the types of problems encountered in the field; and

(3) the sophistication of the technology.

[Patent holder] contends that the level of ordinary skill in the field was [ ]. [Alleged infringer] contends that the level of ordinary skill in the field was [ ].

Authorities

Graham v. John Deere Co., 383 U.S. 1 (1966); *Brown & Williamson Tobacco Corp. v. Philip Morris Inc.*, 229 F.3d 1120, 1125 (Fed. Cir. 2000); *SIBIA Neurosciences, Inc. v. Cadus Pharm. Corp.*, 225 F.3d 1349, 1355 (Fed. Cir. 2000); *Ryko Mfg. Co. v. Nu-Star, Inc.*, 950 F.2d 714, 718-19 (Fed. Cir. 1991).

4.3c INVENTORSHIP

[[Alleged infringer] can meet its burden of proving that a patent is invalid by showing that it fails to name all actual inventors and only the actual inventors. This is known as the "inventorship" requirement.]

or

[To obtain correction of the inventors listed on the patent, or to prove a claim for [type of state law claim that requires proof of patent law inventorship], [plaintiff] must show that it is highly probable that [s]he is an actual inventor of the patent.][11]

To be an inventor, one must make a significant contribution to the conception of one or more claims of the patent.[12] Persons may be inventors even though they do not physically work together or make the same type or amount of contribution, or contribute to the subject matter of each claim of the patent. However, merely helping with experimentation by carrying out the actual inventor's instructions or explaining the actual inventor's well-known concepts or the current state of the art does not make someone an inventor.

Authorities

35 U.S.C. § 102(f) and 35 U.S.C. § 256; *Pannu v. Iolab Corp*., 155 F.3d 1344, 1349-50 (Fed. Cir. 1998) ("If a patentee demonstrates that inventorship can be corrected as provided for in Section 256, a district court must order correction of the patent, thus saving it from being rendered invalid." *Id*. at 1350.); *Hess v. Advanced Cardiovascular Sys*., 106 F.3d 976, 980 (Fed. Cir. 1997); *Burroughs Wellcome Co. v. Barr Lab.*, 40 F.3d 1223, 1227-28 (Fed. Cir. 1994); *Shatterproof Glass Corp. v. Libbey-Owens Ford Co.*, 758 F.2d 613, 624 (Fed. Cir. 1985).

[11] The former paragraph is appropriate where the defendant in an infringement suit claims that the patent is invalid for failure to name the correct inventors. The latter paragraph is appropriate when a plaintiff brings state-law claims that depend on the plaintiff proving his or her status as an inventor. *Shum v. Intel Corp.*, 2007 WL 2404718 (Fed. Cir. Aug. 24, 2007). Those claims must apply the federal patent law standard. *Univ. of Colorado Found. v. American Cyanamid*, 196 F.3d 1366 (Fed. Cir. 1999). Fraud and unjust enrichment claims are examples, if the basis of the claim is that the plaintiff in fact invented the subject matter of the patent. Correction of inventorship is not an issue for the jury, and may be ordered in one set of circumstances if the omission of an inventor is without deceptive intention, but not in another set of circumstances. *Stark v. Advanced Magnetics, Inc*., *et al.,* 119 F.3d 1551 (Fed Cir. 1997).

[12] Alleged infringer, in order to meet its burden of proof, must present corroborating evidence of a contemporaneous disclosure that would enable one skilled in the field to make the claimed invention. Corroborating evidence may take many forms and is evaluated under a rule of reason analysis. The court should tailor instructions to the specific facts of the case. *See Linear Tech. Corp. v. Impala Linear Corp.*, 379 F.3d 1311 (Fed. Cir. 2004); *Univ. of Colo. Found., Inc. v. Am. Cyanimid Co.*, 342 F.3d 1298 (Fed. Cir. 2003).

B.5. Patent Damages

5.1 DAMAGES – BURDEN OF PROOF

I will instruct you about the measure of damages. By instructing you on damages, I am not suggesting which party should win on any issue. If you find that [alleged infringer] infringed any valid claim of the [ ] patent, you must then determine the amount of money damages to be awarded to [patent holder] to compensate it for the infringement.

The amount of those damages must be adequate to compensate [patent holder] for the infringement. A damages award should put the patent holder in approximately the financial position it would have been in had the infringement not occurred, but in no event may the damages award be less than a reasonable royalty. You should keep in mind that the damages you award are meant to compensate the patent holder and not to punish an infringer.

[Patent holder] has the burden to persuade you of the amount of its damages. You should award only those damages that [patent holder] more likely than not suffered. While [patent holder] is not required to prove its damages with mathematical precision, it must prove them with reasonable certainty. [Patent holder] is not entitled to damages that are remote or speculative.

Authorities

Dow Chem. Co. v. Mee Indus., Inc., 341 F.3d 1370, 1381-82 (Fed. Cir. 2003); *Grain Processing Corp. v. American Maize-Prod. Co.*, 185 F.3d 1341, 1349 (Fed. Cir. 1999); *Maxwell v. J. Baker, Inc.*, 86 F.3d 1098, 1108-09 (Fed. Cir. 1996); *Rite-Hite Corp. v. Kelley Co.*, 56 F.3d 1538, 1545 (Fed. Cir. 1995) (*en banc*).

5.2 LOST PROFITS – GENERALLY

In this case, [patent holder] seeks to recover lost profits for some of [alleged infringer]'s sales of [infringing product], and a reasonable royalty on the rest of [alleged infringer]'s sales.

To recover lost profits for infringing sales, [patent holder] must show that but for the infringement there is a reasonable probability that it would have made sales that [alleged infringer] made of the infringing product. [Patent holder] must show the share of [alleged infringer]'s sales that it would have made if the infringing product had not been on the market.

You must allocate the lost profits based upon the customer demand for the patented feature of the infringing [product] [method]. That is, you must determine which profits derive from the patented invention that [alleged infringer] sells, and not from other features of the infringing [product] [method].

Authorities

35 U.S.C. § 284; *Aro Mfg. Co. v. Convertible Top Co.*, 377 U.S. 476, 502-07 (1964); *Beauregard v. Mega Sys., LLC*, 350 F.3d 1327, 1345-46 (Fed. Cir. 2003); *Central Soya Co. v. George A. Hormel & Co.*, 723 F.2d 1573, 1579 (Fed. Cir. 1983); *Lam, Inc. v. Johns-Mansville Corp.*, 718 F.2d 1056, 1065 (Fed. Cir. 1983).

5.3 LOST PROFITS – FACTORS TO CONSIDER

[Patent holder] is entitled to lost profits if it proves all of the following:

(1) that there was a demand for the patented [product] [method] [product produced by the method];

(2) that there were no non-infringing substitutes, or, if there were, the number of the sales made by [alleged infringer] that [patent holder] would have made despite the availability of other acceptable non-infringing substitutes. An alternative may be considered available as a potential substitute even if it was not actually on sale during the infringement period. Factors suggesting that the alternative was available include whether the material, experience, and know-how for the alleged substitute were readily available. Factors suggesting that the alternative was not available include whether the material was of such high cost as to render the alternative unavailable and whether [alleged infringer] had to design or invent around the patented technology to develop an alleged substitute;

(3) that [patent holder] had the manufacturing and marketing capacity to make any infringing sales actually made by the infringer and for which [patent holder] seeks an award of lost profits; and

(4) the amount of profit that [patent holder] would have made if [alleged infringer] had not infringed.

Authorities

Ericsson, Inc. v. Harris Corp., 352 F.3d 1369, 1377-79 (Fed. Cir. 2003); *Micro Chem., Inc. v. Lextron, Inc.*, 318 F.3d 1119, 1123 (Fed. Cir. 2003); *Gargoyles, Inc. v. United States*, 113 F.3d 1572, 1577-78 (Fed. Cir. 1997); *Carella v. Starlight Archery*, 804 F.2d 135, 141 (Fed. Cir. 1986); *Gyromat Corp. v. Champion Spark Plug Co.*, 735 F.2d 549, 552 (Fed. Cir. 1984); *Panduit Corp. v. Stahlin Bros. Fibre Works, Inc.*, 575 F.2d 1152, 1156 (6th Cir. 1978).

5.3a LOST PROFITS – MARKET SHARE

One way [patent holder] may prove the number of sales it would have made if the infringement had not happened is to prove its share of the relevant market excluding infringing products. You may award [patent holder] a share of profits equal to that market share.

In deciding [patent holder]'s market share, you must decide which products are in [patent holder]'s market. Products are in the same market if they are sufficiently similar to compete against each other. Two products are sufficiently similar if one does not have a significantly higher price than or possess characteristics significantly different than the other.

Authorities

Micro Chem., Inc. v. Lextron, Inc., 318 F.3d 1119, 1124 (Fed. Cir. 2003); *Crystal Semiconductor Corp. v. Tritech Microelectronics Int'l, Inc.*, 246 F.3d 1336, 1354-55 (Fed. Cir. 2001); *State Indus., Inc. v. Mor-Flo Indus., Inc.*, 883 F.2d 1573, 1580 (Fed. Cir. 1989).

5.4 LOST PROFITS – COLLATERAL SALES

In this case, [patent holder] is seeking profits from sales of [x], which it contends it would have sold along with [y]. These products are called collateral products.

To recover lost profits on sales of such collateral products, [patent holder] must prove two things. First, that it is more likely than not that [patent holder] would have sold the collateral products but for the infringement. Second, a collateral product and the patented product together must be analogous to components of a single assembly or parts of a complete machine, or they must constitute a functional unit.

Authorities

Rite-Hite Corp. v. Kelley Co., 56 F.3d 1538, 1550 (Fed. Cir. 1995) (*en banc*); *State Indus., Inc. v. Mor-Flo Indus., Inc.*, 883 F.2d 1573, 1580 (Fed. Cir. 1989); *Panduit Corp. v. Stahlin Bros. Fibre Works, Inc.*, 575 F.2d 1152, 1157-58 (6th Cir. 1978).

5.5 LOST PROFITS – PRICE EROSION

[Patent holder] can recover additional damages if it can show to a reasonable probability that, if there had been no infringement, [patent holder] would have been able to charge higher prices for some of its products. In that case, you may also award as additional damages the amount represented by the difference between the amount of profits that [patent holder] would have made by selling its product at the higher price and the amount of profits [patent holder] actually made by selling its product at the lower price that [patent holder] charged for its product. This type of damage is referred to as price erosion damage.

If you find that [patent holder] suffered price erosion, you may also use the higher price in determining [patent holder]'s lost profits from sales lost because of the infringement. In calculating a patentee's total losses from price erosion, you must take into account any drop in sales that would have resulted from a higher price.

You may also award as damages the amount of any increase in costs of [patent holder], such as additional marketing costs, caused by competition from the infringing product.

Authorities

Ericsson, Inc. v. Harris Corp., 352 F.3d 1369, 1377-79 (Fed. Cir. 2003); *Vulcan Eng'g Co. v. FATA Aluminum, Inc.*, 278 F.3d 1366, 1377 (Fed. Cir. 2002); *Crystal Semiconductor Corp. v. Tritech Microelectronics Int'l, Inc.*, 246 F.3d 1336, 1357-58 (Fed. Cir. 2001); *Minco, Inc. v. Combustion Eng'g, Inc.*, 95 F.3d 1109, 1120 (Fed. Cir. 1996); *BIC Leisure Prods., Inc. v. Windsurfing Int'l, Inc.*, 1 F.3d 1214, 1220 (Fed. Cir. 1993); *Kalman v. Berlyn Corp.*, 914 F.2d 1473, 1485 (Fed. Cir. 1990); *Wechsler v. Macke Int. Trade, Inc.,* 486 F. 3d 1286, 1293-94 (Fed. Cir. 2007).

5.6 REASONABLE ROYALTY – ENTITLEMENT

If [patent holder] has not proved its claim for lost profits, or has proved its claim for lost profits for only a portion of the infringing sales, then [patent holder] should be awarded a reasonable royalty for all infringing sales for which it has not been awarded lost profits damages.

Authorities

35 U.S.C. § 284; *Crystal Semiconductor Corp. v. Tritech Microelectronics Int'l, Inc.*, 246 F.3d 1336 (Fed. Cir. 2001); *Fromson v. Western Litho Plate & Supply Co.*, 853 F.2d 1568, 1574 (Fed. Cir. 1998) (*overruled on other grounds*); *Minco, Inc. v. Combustion Eng'g, Inc.*, 95 F.3d 1109, 1119-20 (Fed. Cir. 1996); *Mahurkar v. C.R. Bard, Inc.*, 79 F.3d 1572, 1579 (Fed. Cir. 1996); *Rite-Hite Corp. v. Kelley Co.*, 56 F.3d 1538, 1554 (Fed. Cir. 1995) (*en banc*).

5.7 REASONABLE ROYALTY – DEFINITION

A royalty is a payment made to a patent holder in exchange for rights to make, use or sell the claimed invention. A reasonable royalty is the payment that would have resulted from a negotiation between a patent holder and the infringer taking place at the time when the infringing sales first began. In considering the nature of this negotiation, the focus is on what the expectations of the patent holder and infringer would have been had they entered into an agreement at that time and acted reasonably in their negotiations. However, you must assume that both parties believed the patent was valid and infringed. In addition, you must assume that patent holder and infringer were willing to enter into an agreement; your role is to determine what that agreement would have been. The test for damages is what royalty would have resulted from the hypothetical negotiation and not simply what either party would have preferred.

In this trial, you have heard evidence of things that happened after the infringing sales first began. That evidence can be considered only to the extent that [add appropriate limitations on consideration of later occurring events]. You may not limit or increase the royalty based on the actual profits [alleged infringer] made.

Authorities

Golight, Inc., v. Wal-Mart Stores, Inc., 355 F.3d 1327, 1338 (Fed. Cir. 2004); *Maxwell v. Baker, Inc.*, 86 F.3d 1098, 1108-10 (Fed. Cir. 1996); *Mahurkar v. C.R. Bard, Inc.*, 79 F.3d 1572, 1579-81 (Fed. Cir. 1996); *Rite-Hite Corp. v. Kelley Co.*, 56 F.3d 1538, 1554 (Fed. Cir. 1995) (*en banc*); *Georgia-Pacific Corp. v. United States Plywood Corp.*, 318 F. Supp. 1116, 1120 (S.D.N.Y. 1970).

5.8 DATE OF COMMENCEMENT – PRODUCTS[13]

Damages that [patent holder] may be awarded by you commence on the date that [alleged infringer] has both infringed and been notified of the [ ] patent: [use those that apply to this case]

[– [Patent holder] and [alleged infringer] agree that date was [insert date];]

[– Since [patent holder] sells a product that includes the claimed invention but has not marked that product with the patent number, you must determine the date that [alleged infringer] received actual written notice of the [ ] patent and the specific product alleged to infringe;]

[– Since [patent holder] [marks the product] or [does not sell a product covered by the patent], then damages begin without the requirement for actual notice under the following circumstances:

If the [ ] patent was granted before the infringing activity began, damages should be calculated as of the date you determine that the infringement began; or

If the [ ] patent was granted after the infringing activity began as determined by you, damages should be calculated as of [date patent issued].]

Authorities

35 U.S.C. § 287; *Crystal Semiconductor Corp. v. Tritech Microelectronics Int'l, Inc.*, 246 F.3d 1336 (Fed. Cir. 2001); *Nike Inc. v. Wal-Mart Stores*, 138 F.3d 1437, 1443-44 (Fed. Cir. 1998); *Maxwell v. Baker, Inc.*, 86 F.3d 1098, 1108-09 (Fed. Cir. 1996); *American Med. Sys. v. Medical Eng'g Corp.*, 6 F.3d 1523, 1534 (Fed. Cir. 1993); *Devices for Med., Inc. v. Boehl*, 822 F.2d 1062, 1066 (Fed. Cir. 1987).

[13] This instruction may be used when the claim is an apparatus or product claim and [alleged infringer] is a direct infringer. Different rules may apply if the claim is a method claim or [alleged infringer] is an inducer or contributory infringer.

C.1 Appendix

GLOSSARY

Some of the terms in this glossary will be defined in more detail in the legal instructions you are given. The definitions in the instructions must be followed and must control your deliberations.

[Add any technical terms from the art involved that may be used during trial and have agreed-upon definitions and delete any of the following terms which may not be applicable in a particular case.]

Abstract: A brief summary of the technical disclosure in a patent to enable the U.S. Patent and Trademark Office and the public to determine quickly the nature and gist of the technical disclosure in the patent.

Amendment: A patent applicant's change to one or more claims or to the specification either in response to an office action taken by a Patent Examiner or independently by the patent applicant during the patent application examination process.

Anticipation: A situation in which a claimed invention describes an earlier invention and, therefore, is not considered new and is not entitled to be patented.

Assignment: A transfer of patent rights to another called an ―assignee" who upon transfer becomes the owner of the rights assigned.

Best Mode: The best way the inventor actually knew to make or use the invention at the time of the patent application. If the applicant had a best mode as of the time the application was first filed, it must be set forth in the patent specification.

Claim: Each claim of a patent is a concise, formal definition of an invention and appears at the end of the specification in a separately numbered paragraph. In concept, a patent claim marks the boundaries of the patent in the same way that a legal description in a deed specifies the boundaries of land, i.e. similar to a land owner who can prevent others from trespassing on the bounded property, the inventor can prevent others from using what is claimed. Claims may be independent or dependent. An independent claim stands alone. A dependent claim does not stand alone and refers to one or more other claims. A dependent claim incorporates whatever the other referenced claim or claims say.

Conception: The complete mental part of the inventive act which must be capable of proof, as by drawings, disclosure to another, etc.

Continuation Application: A patent application filed during the examination process of an earlier application which has the same disclosure as the original application and does not include anything which would constitute new matter if inserted in the original application.

Continuation-In-Part (C-I-P) Application: A patent application filed during the application process of an earlier application which repeats some or all of the earlier application and adds matter not disclosed in the earlier application to support the addition of new patent claims.

Drawings: The drawings are visual representations of the claimed invention contained in a patent application and issued patent, and usually include several figures illustrating various aspects of the claimed invention.

Elements: The required parts of a device or the required steps of a method. A device or method infringes a patent if it contains each and every requirement of a patent claim.

Embodiment: A product or method that contains the claimed invention.

Enablement: A description of the invention that is sufficient to enable persons skilled in the field of the invention to make and use the invention. The specification of the patent must contain such an enabling description.

Examination: Procedure before the U.S. Patent and Trademark Office whereby a Patent Examiner reviews the filed patent application to determine if the claimed invention is patentable.

Filing Date: Date a patent application, with all the required sections, has been submitted to the U.S. Patent and Trademark Office.

Infringement: Violation of a patent occurring when someone makes, uses or sells a patented invention, without permission of the patent holder, within the United States during the term of the patent. Infringement may be direct, by inducement, or contributory. Direct infringement is making, using or selling the patented invention without permission. Inducing infringement is intentionally causing another to directly infringe a patent. Contributory infringement is offering to sell or selling an item that is a significant part of the invention, so that the buyer directly infringes the patent. To be a contributory infringer one must know that the part being offered or sold is designed specifically for infringing the patented invention and is not a common object suitable for non-infringing uses.

Limitation: A required part of an invention set forth in a patent claim. A limitation is a requirement of the invention. The word ―limitation" is often used interchangeably with the word ―requirement."

Nonobviousness: One of the requirements for securing a patent. To be valid, the subject matter of the invention must not have been obvious to a person of ordinary skill in the field of the invention at the time of the earlier of the filing date of the patent application or the date of invention.

Office Action: A written communication from the Patent Examiner to the patent applicant in the course of the application examination process.

Patent: A patent is an exclusive right granted by the U.S. Patent and Trademark Office to an inventor to prevent others from making, using or selling an invention for a term of 20 years from the date the patent application was filed (or 17 years from the date the patent issued). When the patent expires, the right to make, use or sell the invention is dedicated to the public. The patent has three parts, which are a specification, drawings and claims. The patent is granted after examination by the U.S. Patent and Trademark Office of a patent application filed by the inventor which has these parts, and this examination is called the prosecution history.

Patent and Trademark Office (PTO): An administrative branch of the U.S. Department of Commerce that is charged with overseeing and implementing the federal laws of patents and trademarks. It is responsible for examining all patent applications and issuing all patents in the United States.

Prior Art: Previously known subject matter in the field of a claimed invention for which a patent is being sought. It includes issued patents, publications, and knowledge deemed to be publicly available such as trade skills, trade practices and the like.

Prosecution History: The prosecution history is the complete written record of the proceedings in the PTO from the initial application to the issued patent. The prosecution history includes the office actions taken by the PTO and the amendments to the patent application filed by the applicant during the examination process.

Reads On: A patent claim ―reads on" a device or method when each required part (requirement) of the claim is found in the device or method.

Reduction to Practice: The invention is ―reduced to practice" when it is sufficiently developed to show that it would work for its intended purpose.

Requirement: A required part or step of an invention set forth in a patent claim. The word ―requirement" is often used interchangeably with the word ―limitation."

Royalty: A royalty is a payment made to the owner of a patent by a non-owner in exchange for rights to make, use or sell the claimed invention.

Specification: The specification is a required part of a patent application and an issued patent. It is a written description of the invention and of the manner and process of making and using the claimed invention.

Field Code Changed

COMMENTS REGARDING USE OF SAMPLE VERDICT FORM

The following sample verdict form is provided for guidance in preparing an appropriate special verdict form tailored for your specific case. The sample is for a hypothetical case in which the patent holder alleges direct and indirect infringement of a single claim of one patent and seeks a combination of lost profits and a reasonable royalty for the allegedly infringing sales. The alleged infringer raises a number of invalidity defenses. No issue is raised, however, as to the conception date of the claimed invention. The issue of willfulness has not been bifurcated.

The form requires the jury to make specific findings on the bases for the affirmative defenses of ~~"a~~nticipation" and ~~"s~~tatutory bars."

The form also requires the jury to make factual determinations underlying a conclusion of ~~"o~~bviousness" or ~~"n~~onobviousness." It is expected that these issues will be presented to the jury as specifically as possible. For example, if the only dispute between the parties is whether a particular reference is within the ~~"s~~cope and content" of the prior art, that is the only question on that *Graham* factor that should be presented to the jury. As another example, if the only factual dispute between the parties on the ~~"d~~ifferences between the prior art and the claimed invention" is whether a prior art reference discloses a particular claim limitation, that is the only issue that should be presented to the jury on that *Graham* factor.

This form also provides two alternative section 11's on obviousness. One asks the jury to only answer the underlying factual questions. The other permits the jury to give an advisory verdict on the ultimate question of obviousness. It must be remembered, however, that the ultimate question of obviousness is a question of law for the court. *KSR Intern, Co. v. Teleflex, Inc.*, 127 S.Ct. 1727, 1745 (2007)(~~"T~~he ultimate judgment of obviousness is a legal determination."); *see Dippin' Dots, Inc. v. Mosey*, 476 F.3d 1337, 1343 (Fed. Cir. 2007). Both alternatives are designed to focus the parties and the court on the factual disputes on the obviousness question. For example, the form requires that each party specify exactly what it contends constitutes the scope and content of the prior art. Although trial courts have often permitted the jury to reach the final conclusion of obviousness without specifying its underlying factual determinations, such an approach is not recommended. The verdict form should require the jury's finding on each factual issue so that the trial judge may make the final determination on the obviousness question. As Judge Michel pointed out in his dissent in *McGinley v. Franklin Sports, Inc.*, 262 F.3d 1339 (Fed. Cir. 2001):

> The issue presented in this appeal derives from the common, if unfortunate, practice of allowing the jury to render a general verdict on the ultimate legal conclusion of obviousness without requiring express findings on the underlying factual issues through a special verdict or special interrogatories under Fed. R. Civ. P. 49. Nevertheless, since the inception of our court, we have recognized that a court may submit this legal question to a jury and that doing so by general verdict rather than by Rule 49 is not ordinarily an abuse of discretion. We have emphasized, however, that there is no question that the judge must remain the

ultimate arbiter on the question of obviousness.")

Id. at 1358 (internal citations and quotation marks omitted). The fact that the verdict form allows the jury to give an advisory conclusion on obviousness should not be construed as suggesting that the court defer to the jury's ultimate determination on obviousness. The law is clear that the ultimate question is a legal one for the court.

C.3. Appendix

SAMPLE VERDICT FORM

When answering the following questions and filling out this Verdict Form, please follow the directions provided throughout the form. Your answer to each question must be unanimous. Some of the questions contain legal terms that are defined and explained in detail in the Jury Instructions. Please refer to the Jury Instructions if you are unsure about the meaning or usage of any legal term that appears in the questions below.

We, the jury, unanimously agree to the answers to the following questions and return them under the instructions of this court as our verdict in this case.

FINDINGS ON INFRINGEMENT CLAIMS

(The questions regarding infringement should be answered regardless of your findings with respect to the validity or invalidity of the patent.)

A. Direct Infringement

1. Has Patent Holder proven that it is more likely than not that every requirement of claim 1 of its patent is included in Alleged Infringer's accused product?

Yes _____ No _____

If your answer to question 1 is "yes," go to question 3. If your answer to question 1 is "no," go to question 2.

B. Infringement Under the Doctrine of Equivalents

2. Has Patent Holder proven that it is more likely than not that the accused product includes parts that are identical or equivalent to every requirement of claim 1 of Patent Holder's patent? In other words, for any requirement that is not literally found in the Alleged Infringer's accused product, does the accused product have an equivalent part to that requirement?

Yes _____ No _____

C. Contributory Infringement

3. Has Patent Holder proven that it is more likely than not: (i) that Direct Infringer infringed claim 1 of Patent Holder's patent; (ii) that Alleged Infringer supplied an important component of the infringing part of the product; (iii) that the component was not a common component suitable for non-infringing use; and (iv) that Alleged Infringer supplied the component with knowledge of the patent and knowledge that the component was especially made or adapted for use in an infringing manner?

Yes _____ No _____

D. Inducing Infringement

4. Has Patent Holder proven that it is more likely than not: (i) that Direct Infringer infringed claim 1 of Patent Holder's patent; (ii) that Alleged Infringer took action that actually induced that infringement by Direct Infringer; (iii) that Alleged Infringer was aware of the patent; and (iv) that Alleged Infringer knew or should have known that taking such action would induce direct infringement?

Yes _____ No _____

E. Willful Infringement

5a. Has the Patent Holder proven that it is highly probable that from an objective point of view the defenses put forth by Alleged Infringer failed to raise any substantial question with regard to infringement, validity or enforcement of the patent claim?

Yes _____ No _____

[If the answer to question 5a is "yes," answer question 5b. If your answer to question 5a is "no," go to question 6.]

5b. Has the Patent Holder proven that it is highly probable that the Alleged Infringer actually knew, or it was so obvious that Alleged Infringer should have known, that its actions constituted infringement of a valid and enforceable patent?

FINDINGS ON INVALIDITY DEFENSES

(The questions regarding invalidity should be answered regardless of your findings with respect to infringement.)

A. Written Description Requirement

6. Has Alleged Infringer proven that it is highly probable that the specification of the Patent Holder's patent does not contain an adequate written description of the claimed invention?

Yes _____ No _____

B. Enablement

7. Has Alleged Infringer proven that it is highly probable that the specification of the Patent Holder's patent does not contain a description of the claimed invention that is sufficiently full and clear to enable persons of ordinary skill in the field to make and use the invention?

Yes _____ No _____

C. Best Mode

8. Has Alleged Infringer proven that it is highly probable that the patent does not disclose what the inventor believed was the best way to carry out the claimed invention at the time the patent application was filed?

Yes _____ No _____

D. Anticipation

9. Has Alleged Infringer proven that it is highly probable that claim 1 of Patent Holder's patent was "anticipated," or, in other words, not new?

Yes _____ No _____

[If the answer is "yes," check any reason below that is applicable:

_____ The claimed invention was already publicly known or publicly used by others in the United States before the date of conception of the claimed invention.

_____ The claimed invention was already patented or described in a printed publication somewhere in the world before the date of conception.

_____ The claimed invention was already made by someone else in the United States before the date of conception and that other person had not abandoned the invention or kept it secret.

_____ The claimed invention was already described in another issued U.S. patent or published U.S. patent application that was based on a patent application filed before the date of conception.

_____ The named inventor did not invent the claimed invention but instead learned of the claimed invention from someone else.

_____ The named inventor was not the first inventor of the claimed invention.]

E. Statutory Bar

10. Has Alleged Infringer proven that it is highly probable that claim 1 of Patent Holder's patent was not filed within the time required by law?

Yes _____ No _____

If the answer is "yes," check any reason below that is applicable:

_____ The claimed invention was already patented or described in a printed publication somewhere in the world at least one year before the filing date of the patent application.

_____ The claimed invention was already being openly used in the United States at least one year before the filing date of the patent application and that use was not primarily an experimental use to test whether the invention worked for its intended purpose which was controlled by the inventor.

_____ A device or method using the claimed invention was sold or offered for sale in the United States and the claimed invention was ready for patenting at least one year before the filing date of the patent application and that offer or sale was not primarily for experimental purposes to test whether the invention worked for its intended purpose and which was controlled by the inventor.

_____ Patent Holder had already obtained a patent on the claimed invention in a foreign country before the original U.S. application, and the foreign application was filed at least one year before the U.S. application.

F. Obviousness

[Alternative 1 – Jury decides underlying factual issues only]

11. The ultimate legal conclusion on the obviousness question will be made by the court. However, in order for the court to do so, you must answer the following preliminary factual questions:

a. What was the level of ordinary skill in the field that someone would have had at the time the claimed invention was made? (check the applicable answer)

_____set forth Alleged Infringer's contention, e.g., an individual with at least 3 years of experience in both furniture design and manufacture]

_____ [set forth Patent Holder's contention, e.g., anyone who has worked in the field of furniture design or manufacture for at least two years]

_____ [other, specify_____]

b. What was the scope and content of the prior art at the time of the claimed invention? (check the applicable answer)

_____ [set forth what the Alleged Infringer has offered as the invalidating prior art, e.g., '123 patent on fixed sitting device with four legs, general knowledge in field of industrial design that a horizontal surface may be held parallel to the ground using three legs and common knowledge that a person can easily move an object weighing under 25 pounds]

_____ [set forth what the Patent Holder asserts was within the scope and content of the prior art, e.g., '123 patent on fixed sitting device with four legs]

_____ [other, specify_____]

c. What difference, if any, existed between the claimed invention and the prior art at the time of the claimed invention?

. _____ [set forth the Alleged Infringer's contention as to the difference, e.g., no difference between scope of invention and what is known in prior art]

_____ [set forth the Patent Holder's contention as to the difference, e.g., only 3 legs on a sitting device and portability]

_____ [other, specify_____]

d. Which of the following factors has been established by the evidence with respect to the claimed invention: (check those that apply)[verdict form should list only those factors for which a *prima facie* showing has been made]:

_____ commercial success of a product due to the merits of the claimed invention

_____ a long felt need for the solution that is provided by the claimed invention

_____ unsuccessful attempts by others to find the solution that is provided by the claimed invention

_____ copying of the claimed invention by others

_____ unexpected and superior results from the claimed invention

_____ acceptance by others of the claimed invention as shown by praise from others in the field or from the licensing of the claimed invention

_____ independent invention of the claimed invention by others before or at about the same time as the named inventor thought of it

[_____ other factor(s) indicating obviousness or nonobviousness—describe the factor(s)_____]

[Alternative 2 - Jury decides underlying factual issues and renders advisory verdict on obviousness]

11. The ultimate conclusion that must be reached on the obviousness question is whether Alleged Infringer has proven that it is highly probable that the claimed invention would have been obvious to a person of ordinary skill in the field at the time the patent application was filed. In order to properly reach a conclusion the following preliminary questions must be answered:

a. What was the level of ordinary skill in the field that someone would have had at the time the claimed invention was made? (check the applicable answer)

_____ [set forth Alleged Infringer's contention, e.g., an individual with at least 3 years of experience in both furniture design and manufacture]

_____ [set forth Patent Holder's contention, e.g., anyone who has worked in the field of furniture design or manufacture for at least two years]

_____ [other, specify _____]

b. Was [disputed reference] within the scope and content of the prior art at the time of the claimed invention? (check only if reference was within the scope and content of the prior art)

_____ [set forth the prior art reference [alleged infringer] has offered as prior art that the [patent holder] disputes as being in the scope and content of the prior art. If there is more than one reference in dispute, each disputed reference should be listed separately.]

c. What difference, if any, existed between the claimed invention and the prior art at the time of the claimed invention?

. _____ [set forth the Alleged Infringer's contention as to the difference, e.g., no difference between scope of invention and what is known in prior art]

_____ [set forth the Patent Holder's contention as to the difference, e.g., only 3 legs on a sitting device and portability]

_____ [other, specify_____]

d. Which of the following factors has been established by the evidence with respect to the claimed invention: (check those that apply)[verdict form should list only those factors for which a *prima facie* showing has been made]:

_____ commercial success of a product due to the merits of the claimed invention

_____ a long felt need for the solution that is provided by the claimed invention

_____ unsuccessful attempts by others to find the solution that is provided by the claimed invention

_____ copying of the claimed invention by others

_____ unexpected and superior results from the claimed invention

_____ acceptance by others of the claimed invention as shown by praise from others in the field or from the licensing of the claimed invention

_____ independent invention of the claimed invention by others before or at about the same time as the named inventor thought of it

[_____ other factor(s) indicating obviousness or nonobviousness—describe the factor(s)_____]

After consideration of the answers to the preliminary questions above, do you find that the Alleged Infringer has proven that it is highly probable that the claim of Patent Holder's patent would have been obvious to a person of ordinary skill in the field at the time the patent application was filed?

Yes _____ No _____

G. Inventorship

12. Has Alleged Infringer proven that it is highly probable that Patent Holder's patent fails to meet the requirement to name all actual inventors and only the actual inventors?

Yes _____ No _____

FINDINGS ON DAMAGES (IF APPLICABLE)

If you answered question 1, 2, 3 or 4 "yes" and questions 6, 7, 8, 9, 10, 11 and 12 "no," proceed to answer the remaining questions. If you did not so answer, do not answer the remaining questions and proceed to check and sign the verdict form.

13. What lost profits, if any, did Patent Holder show it more likely than not suffered as a result of sales that it would with reasonable probability have made but for Alleged Infringer's infringement?

$_____

14. For those infringing sales for which Patent Holder has not proved its entitlement to lost profits, what amount has it proved it is entitled to as a reasonable royalty?

$_____

You have now reached the end of the verdict form and should review it to ensure it accurately reflects your unanimous determinations. The Presiding Juror should then sign and date the verdict form in the spaces below and notify the Security Guard that you have reached a verdict. The Presiding Juror should retain possession of the verdict form and bring it when the jury is brought back into the courtroom.

DATED: _____, 20___	By:_____ Presiding Juror

Author Biographies

Peter S. Menell is a professor of law at University of California, Berkeley School of Law, where he specializes in intellectual property law. He co-founded the Berkeley Center for Law & Technology in 1995, which has been instrumental in Berkeley Law being named the top intellectual property program in the nation for more than a decade. Professor Menell earned his S.B. from the Massachusetts Institute of Technology, M.A. and Ph.D. (economics) from Stanford University, and J.D. from Harvard Law School, where he served as an editor of the Harvard Law Review. After graduating from law school, he clerked for the Honorable Jon O. Newman of the U.S. Court of Appeals for the Second Circuit. Professor Menell has written more than forty articles and numerous books, including *Intellectual Property in the New Technological Age* (with R. Merges and M. Lemley, 4th rev. ed. 2007) and *Software and Internet Law* (with M. Lemley, R. Merges and P. Samuelson, 3d ed. 2006). Professor Menell has organized more than thirty intellectual property education programs for the Federal Judicial Center since 1998. Professor Menell founded and supervises the Annual Review of Law and Technology (now in its twelfth year, published by the Berkeley Technology Law Journal). He has advised the U.S. Congress, federal agencies, state attorneys general, and technology and entertainment companies on a wide range of intellectual property and antitrust matters.

Lynn H. Pasahow is a partner in the Litigation Group at Fenwick & West. For over thirty years Mr. Pasahow has represented cutting-edge technology companies and universities and their Nobel laureate and other inventors in patent and other intellectual property litigation in the software, Internet and biotech industries. Mr. Pasahow is a co-author, with the Honorable William W Schwarzer, of *Civil Discovery: A Guide to Efficient Practice.* He co-teaches an intellectual property course at the University of California, San Francisco, and regularly lectures about intellectual property law subjects to groups that have included the Federal Judicial Center, American Association for the Advancement of Science, American Law Institute, Practising Law Institute, and University of California, Berkeley School of Law. Mr. Pasahow graduated from University of California, Berkeley School of Law, and holds a Bachelor of Arts from Stanford University.

James Pooley is a partner at Morrison and Foerster, where he specializes in the litigation and trial of patent, trade secret, copyright, and technology-related commercial litigation, in state and federal courts, and before the International Trade Commission. Mr. Pooley has practiced in Silicon Valley since 1973, establishing a national reputation as trial counsel in some of the most difficult and high visibility cases involving intellectual property. Mr. Pooley is author of the highly regarded

treatise *Trade Secrets* (Law Journal Press) and numerous other professional publications in the field of intellectual property. He is immediate past president of the American Intellectual Property Law Association and president of the National Inventors Hall of Fame. Mr. Pooley teaches as an adjunct professor of law at the University of California, Berkeley School of Law. He is a fellow of the California Council on Science and Technology, a member of the National Academy of Sciences Committee on Intellectual Property Rights, and a member of the Northern District of California committee on pattern jury instructions for patent cases. Mr. Pooley conceived and scripted an instructional video for jurors in patent cases that was produced in 2002 by the Federal Judicial Center and is now used in courts throughout the United States. Mr. Pooley graduated from Columbia University School of Law as a Harlan Fiske Stone Scholar in 1973 and holds a Bachelor of Arts from Lafayette College.

Matthew D. Powers is a partner at Weil, Goshal & Manges, where he specializes in patent and trade secret litigation and co-chairs the firm's 500-attorney Litigation Department. Mr. Powers has litigated and tried cases all over the world involving a wide range of technologies, including semiconductor devices and manufacturing equipment and processes, pharmaceuticals, DNA sequencing, medical devices and other biotechnologies, computer hardware and software, communications (network and telephony), and the Internet. He co-authored *Modern Patent Litigation* (with V. Winters), serves as an editor-in-chief of the Intellectual Property & Technology Law Journal, and has published extensively on various aspects of intellectual property law and litigation. He is a frequent lecturer nationally and internationally on intellectual property litigation issues. Mr. Powers also co-teaches a patent litigation course at the University of California, Berkeley School of Law. Mr. Powers graduated from Harvard Law School and holds a Bachelors degree from Northwestern University.

Collaborator Profiles

Nicholas A. Brown is a partner at Weil, Gotshal & Manges, where he specializes in patent litigation involving complex technology. He graduated from Harvard Law School and holds a Bachelors of Arts from Princeton University.

Steven C. Carlson is a principal at Fish & Richardson, where he specializes in patent litigation. He served as a judicial law clerk to the Honorable Roderick R. McKelvie of the District Court of Delaware and to the Honorable Paul R. Michel of the Federal Circuit. He graduated from Yale Law School, where he served as an editor of the Yale Law Journal, and holds a Bachelors of Arts from Reed College.

Carolyn Chang is an associate at Fenwick & West, where she specializes in patent litigation. She graduated from University of California, Hastings College of the Law and holds a Bachelors of Arts from University of California, Berkeley.

Thomas Fletcher is a law clerk to the Honorable Ronald M. Whyte in the Northern District of California. He graduated from University of California, Berkeley School of Law, and holds a Bachelors of Science from the California Institute of Technology.

Jeffrey G. Homrig is an associate at Weil, Gotshal & Manges, where he specializes in patent litigation. He graduated from University of California, Berkeley School of Law, and holds a Bachelors of Arts from the University of California, Berkeley.

Marc David Peters is a partner at Morrison & Foerster, where he specializes in patent and trade secret litigation. Dr. Peters received his J.D. from Stanford Law School, where he served as an editor of the Stanford Law Review, and holds a Ph.D. in Physics from the University of California, Berkeley, and an A.B. from Harvard University.

Susan Vastano Vaughan is an associate at Morrison & Foerster, where she specializes in patent litigation. She graduated from University of California, Hastings College of Law, and holds a Masters of Science from University of Miami and a Bachelors of Science from Texas A&M University.

Table of Cases

02 Micro Int'l Ltd. v. Beyond Innovation Tech., 521 F.3d 1351 (Fed. Cir. 2008), 8-18

3COM Corp v. D-Link Sys., Inc., No C 03-2177 VRW, 2007 U.S. Dist. LEXIS 26542 (N.D. Cal. March 27, 2007), 2-21

A & L Tech. v. Resound Corp., Case No. C 93-00107 CW, 1995 U.S. Dist. LEXIS 22443 (N.D. Cal. 1995), 8-27

A.B. Dick Co. v. Burroughs Corp., 713 F.2d 700 (Fed. Cir. 1983), 5-81

A.C. Aukerman Co. v. R.L. Chaides Constr. Co., 960 F.2d 1020 (Fed. Cir. 1992), 6-13, 11-73

A&L Tech. v. Resound Corp., No. C 93-00107 CW, 1995 U.S. Dist. LEXIS 22442 (N.D. Cal. March 15, 1995), 9-8

aaiPharma, Inc. v. Kremers Urban Dev. Co., 361 F. Supp. 2d 770 (N.D. Ill. 2005), 4-20

Abbott Diabetes Care Inc. v. Roche Diagnostics Corp., No. C05-03117 MJJ, 2007 U.S. Dist. LEXIS 59161 (N.D. Cal. July 30, 2007), 2-21

Abbott Labs v. Dey, L.P., 287 F.3d 1097 (Fed. Cir. 2002), 11-63

Abbott Labs. v. Andrx Pharms., Inc., 452 F.3d 1331 (Fed. Cir. 2006), 3-6, 3-7, 3-9, 3-15

Abbott Labs. v. Dey, L.P., 110 F. Supp. 2d 667 (N.D. Ill. 2000), 5-79

Abbott Labs. v. Diamedix Corp., 47 F.3d 1128 (Fed. Cir. 1995), 2-15

Abbott Labs. v. Geneva Pharms., 182 F.3d 1315 (Fed. Cir. 1999), 11-44

Abbott Labs. v. Sandoz, Inc., 500 F. Supp. 2d 846 (N.D. Ill. 2007), 3-29

Acumed LLC v. Stryker Corp., 483 F.3d 800 (Fed. Cir. 2007), 5-42, 5-43, 5-53, 5-60

Additive Controls & Measurement Sys., Inc. v. Flowdata, Inc., 154 F.3d 1345 (Fed. Cir. 1998), 3-27, 3-31

ADT Corp. v. Lydall, Inc., 159 F.3d 534 (Fed. Cir. 1998), 7-35

Advanced Cardiovascular Sys. v. Medtronic, Inc., 265 F.3d 1294 (Fed. Cir. 2001), 2-10, 2-25, 5-32, 9-6

Advanced Cardiovascular Sys., Inc. v. Medtronic, Inc., 2000 WL 34334583 (N.D. Cal. 2000), 9-8

Advanced Display Sys., Inc. v. Kent State Univ., 212 F.3d 1272 (Fed. Cir. 2000), 8-18

Aero Prods. Int'l, Inc. v. Intex Recreation Corp., 466 F.3d 1000 (Fed. Cir. 2006), 5-75

Aetna Life Ins. Co. v. Haworth, 300 U.S. 227 (1937), 2-17

AFG Indus., Inc. v. Cardinal IG Co., Inc., 239 F.3d 1239 (Fed. Cir. 2001), 5-18, 5-63

Afros S.P.A. v. Krauss-Maffei Corp., 113 F.R.D. 127 (D. Del. 1986), 4-9

Agfa Corp. v. Creo Prods. Inc., 451 F.3d 1366 (Fed. Cir. 2006), 8-4

Agriazp, Inc. v. Woodstream Corp., 520 F.3d 1337 (Fed. Cir. 2008), 8-31

Agrizap, Inc. v. Woodstream Corp., 520 F.3d 1337 (Fed. Cir. 2008), 7-8, 7-10

Aguilar v. Int'l Longshoremen's Union Local #10, 996 F.2d 443 (9th Cir. 1992), 7-21

Al-Site Corp. v. VSI Int'l, Inc., 174 F.3d 1308 (Fed. Cir. 1999), 6-14, 8-27, 11-64, 11-65

Alcan Int'l Ltd. v. S.A. Day Mfg. Co., Inc., 176 F.R.D. 75 (W.D.N.Y. 1996), 4-9

Alcon Labs., Inc. v. Pharmacia Corp., 225 F. Supp. 2d 340, 344 (S.D.N.Y. 2002), 4-20

Alemite Mfg. Co. v. Staff, 42 F.2d 832 (2d Cir. 1930), 3-27

All Dental Prodx, Inc. v. Advantage Dental Prods., Inc., 309 F.3d 774 (Fed. Cir. 2002), 5-74

Allen v. Zurich Ins. Co., 667 F.2d 1162 (4th Cir. 1982), 5-84

Allergan, Inc. v. Alcon Labs, Inc., 324 F.3d 1322 (Fed. Cir. 2003), 10-7

Alloc, Inc. v. Int'l Trade Comm'n, 342 F.3d 1361 (Fed. Cir. 2003, 5-56

Altana Pharma AG v. Teva Pharms. USA, Inc., 532 F. Supp. 2d 666 (D.N.J. 2007), 3-11

Am. Hoist & Derrick Co. v. Sowa & Sons, Inc., 725 F.2d 1350 (Fed. Cir. 1984), 7-7, 8-27, 8-31, 11-52

Am. Med. Sys., Inc. v. Med. Eng'g Corp., 6 F.3d 1523 (Fed. Cir. 1993), 11-82

Amado v. Microsoft Corp., 517 F.3d 1353 (Fed. Cir. 2008), 9-5, 9-10

Amazon.com, Inc. v. Barnesandnoble.com, Inc., 239 F.3d 1343 (Fed. Cir. 2001), 3-3, 3-8, 3-15

Amgen Inc. v. Hoechst Marion Roussel, Inc., 314 F.3d 1313 (Fed. Cir. 2003), 11-33

Amgen Inc. v. Hoechst Marion Roussel, Inc., 469 F.3d 1039 (Fed. Cir. 2006), 5-19, 5-34, 11-33

Amgen, Inc. v Hoescht Marion Roussel, Inc., 339 F. Supp. 2d 202 (D. Mass. 2004), 8-10

Amgen, Inc. v. Chugai Pharm. Co., 927 F.2d 1200 (Fed. Cir. 1991), 11-35

Amgen, Inc. v. F. Hoffmann-La Roche Ltd., 494 F. Supp. 2d 54 (D. Mass. 2007), 5-85, 5-86

Amicus Commc'ns, L.P. v. Hewlett-Packard Co., 1999 U.S. Dist. LEXIS 20901 (D.D.C. Dec. 3, 1999), 4-20

Amoco Prod. Co. v. Village of Gambell, Alaska, 480 U.S. 531 (1987), 3-10

Amsted Indus. Inc. v. Buckeye Steel Castings Co., 24 F.3d 178 (Fed. Cir. 1994), 11-82

Amsted Indus., Inc. v. Buckeye Steel Castings Co., 24 F.3d 178 (Fed. Cir. 1994), 9-6

Anchor Plastics Co. v. Dynex Indus. Plastics Corp., 184 U.S.P.Q. (BNA) 482 (D.N.J. 1974), 4-21

Anchor Wall Sys. v. Rockwood Retaining Walls, Inc., 340 F.3d 1298 (Fed. Cir. 2003), 5-43

Andersen Corp. v. Fiber Composites, LLC, 474 F.3d 1361 (Fed. Cir. 2007), 5-52, 5-56, 5-59, 5-60

Andrx Pharms., Inc. v. Biovail Corp., 276 F.3d 1368 (Fed. Cir. 2002), 10-1, 10-7

Angelo v. Armstrong World Indus., Inc., 11 F.3d 957 (10th Cir. 1993), 8-3

Antonious v. Spalding & Evenflo Cos., Inc., 275 F.3d 1066 (Fed. Cir. 2002), 4-13

Applera Corp. v. MJ Research, Inc., 389 F. Supp. 2d 344 (D. Conn. 2005), 7-35, 8-10

Applied Materials, Inc. v. Advanced Semiconductor Materials Am., Inc., 98 F.3d 1563 (Fed. Cir. 1996), 11-75

Applied Materials, Inc. v. Advanced Semiconductors Materials Am., Inc., No. 92-20643, 1995 U.S. Dist. LEXIS 22335 (N.D. Cal. Apr. 25, 1995), 8-27

Aquatex Indus., Inc. v. Techniche Solutions, 419 F.3d 1374 (Fed. Cir. 2005), 7-29

Archive Corp. v. Cipher Data Prods., Inc., 1988 U.S. Dist. LEXIS 17190 (C.D. Cal. Dec. 22, 1988), 3-7

Arey v. Goodyear Tire & Rubber Co., 11 F.R.D. 209 (N.D. Ohio 1951), 2-20

Aro Mfg. Co. v. Convertible Top Replacement Co., 365 U.S. 336 (1961), 5-51

Aro Mfg. Co. v. Convertible Top Replacement Co., 377 U.S. 476 (1964), 7-13, 11-57, 11-58, 11-68

Arthrocare Corp. v. Smith & Nephew, Inc., 315 F. Supp. 2d 615 (D. Del. 2004), 9-10

Arthur A. Collins, Inc. v. N. Telecom, Ltd., 216 F.3d 1042 (Fed. Cir. 2000), 6-13

ASCII Corp. v. STD Entm't USA, Inc., 844 F. Supp. 1378 (N.D. Cal. 1994), 2-28

Association of Mexican American Educators v. California, 231 F.3d 572 (9th Cir. 2000), 5-16, 8-24

Athletic Alternatives, Inc. v. Prince Mfg., Inc., 73 F.3d 1573 (Fed. Cir. 1996), 2-6

Atlas Powder Co. v. Ireco Chems., 773 F.2d 1230 (Fed. Cir. 1985), 3-6, 3-28

Atmel Corp. v. Info. Storage Devices Inc., No. C 95-1987 FMS, 1998 U.S. Dist. LEXIS 17564 (N.D. Cal. Nov. 5, 1998), 2-21

Atofina v. Great Lakes Chem. Corp., 441 F.3d 991 (Fed. Cir. 2006), 5-58, 11-37

Auto. Tech. Int'l v. BMW, 501 F.3d 1274 (Fed. Cir. 2007), 11-34

Avago Techs. Gen. IP PTE Ltd. v. Elan Microelectronics Corp., No. C04-05385 JW (HRL), 2007 U.S. Dist. LEXIS 39543 (N.D. Cal. May 15, 2007), 2-21

Avia Group Int'l, Inc. v. L.A. Gear Cal., Inc., 853 F.2d 1557 (Fed. Cir. 1988), 7-8, 11-84

B & H Mfg., Inc. v. Foster-Forbes Glass Co., 23 U.S.P.Q.2d 1397 (N.D. Ind. 1992), 4-6

Baker v. Farmers Elec. Coop., Inc., 34 F.3d 274 (5th Cir. 1994), 2-30

Baldwin Graphic Sys., Inc. v. Sibert, Inc. 512 F.3d 1338 (Fed. Cir. 2008), 5-63

Bancorp Servs., L.L.C. v. Hartford Life Ins. Co., 359 F.3d 1367 (Fed. Cir. 2004), 5-75

Bausch & Lomb, Inc. v. Alcon Labs., Inc., 79 F. Supp. 2d 252 (W.D.N.Y. 2000), 8-26

Bayer AG v. Schein Pharms., Inc., 301 F.3d 1306 (Fed. Cir. 2002), 11-35

Bd. of Trs. of the Leland Stanford Junior Univ. v. Roche Molecular Sys., Inc., 237 F.R.D. 618 (N.D. Cal. 2006), 4-19

Beacon Theatres, Inc. v. Westover, 359 U.S. 500 (1959), 8-4

Beatrice Foods Co. v. New England Printing & Lithographing Co., 923 F.2d 1576 (Fed. Cir. 1991), 9-5

Beckman Instruments, Inc. v. LKB Produkter AB, 892 F.2d 1547 (Fed. Cir. 1989), 9-7

Bell Atl. Corp. v. Twombly, 127 S.Ct. 1955 (2007), 2-8, 11-76

Belotte v. Zayre Corp., 531 F.2d 1100 (1st Cir. 1976), 8-18

Biagro W. Sales, Inc. v. Grow More, Inc., 423 F.3d 1296 (Fed. Cir. 2005), 5-36

Bicon, Inc. v. Strauman Co., 441 F.3d 945 (Fed. Cir. 2006), 5-62

Bio-Tech Gen. Corp. v. Genentech, Inc., 80 F.3d 1553 (Fed. Cir. 1996), 7-32

Biomedical Patent Mgmt. Corp. v. Cal. Dep't of Health Servs., 505 F.3d 1328 (Fed. Cir. 2007), 5-84

Biotec Biologische Naturverpackungen GmbH & Co. KG v. Biocorp, Inc., 249 F.3d 1341 (Fed. Cir. 2001), 5-44

Black & Decker Inc. v. Robert Bosch Tool Corp., No. 04 C 7955, 2006 U.S. Dist. LEXIS 86990 (N.D. Ill. Nov. 26, 2006), 9-2

Black & Decker v. Bosch, 2006 U.S. Dist. LEXIS 94556 (N.D. Ill. 2006), 8-33

Blonder-Tongue Labs, Inc. v. Univ. of Ill. Found., 402 U.S. 313 (1971), 2-17, 5-78, 11-24, 11-75

BMC Res., Inc. v. Paymentech, L.P., 498 F.3d 1373 (Fed. Cir. 2007), 6-21

BMC Resources, Inc. v. Paymentech, L.P., 498 F.3d 1373 (Fed. Cir. 2007), 11-58

Boyden Power-Brake Co. v. Westinghouse, 170 U.S. 537 (1898), 11-65

Brenner v. Manson, 383 U.S. 519 (1966), 11-31

Bristol-Myers Squibb Co. v. Ben Venue Labs., Inc., 246 F.3d 1368 (Fed. Cir. 2001), 11-58

Bristol-Myers Squibb Co. v. Rhone-Poulenc Rorer, Inc., 326 F.3d 1226 (Fed. Cir. 2003), 7-43, 8-27

Brunswick Corp. v. United States, 46 U.S.P.Q.2d 1446 (Fed. Cir. 1998), 7-26

Buckley v. Airshield Corp., 116 F. Supp. 2d 658 (D. Md. 2000), 7-21

Budde v. Harley-Davidson, Inc., 250 F.3d 1369 (Fed. Cir. 2001), 6-19

Buildex, Inc. v. Kason Indus., Inc., 849 F.2d 1451 (Fed. Cir. 1988), 8-30

Burkhart v. Wash. Metro. Area Transit Auth., 112 F.3d 1207 (D.C. Cir. 1997), 8-26

Burroughs Wellcome Co. v. Barr Labs., Inc., 40 F.3d 1223 (Fed. Cir. 1994), 11-54

Cal. E. Labs., Inc. v. Gould, 896 F.2d 400 (9th Cir. 1990), 11-69

Callicrate v. Wadsworth Mfg., Inc., 427 F.3d 1361 (Fed. Cir. 2005), 5-70, 5-72

Canon, Inc. v. GCC Int'l, Ltd., 263 F. App'x 57 (Fed. Cir. 2008), 3-10

Capon v. Eshhar, 418 F.3d 1349 (Fed. Cir. 2005), 11-34

Caraco Pharm. Labs., Ltd. v. Forest Labs. Inc., 527 F.3d 1278 (Fed. Cir. 2008), 10-5, 10-6

Cardinal Chem. Co. v. Morton Int'l, 508 U.S. 83 (1993), 2-17, 6-20, 7-33

Carter v. United States, 973 F.2d 1479 (9th Cir. 1992), 9-8

Catalina Mktg. Int'l, Inc. v. Coolsavings.com, Inc., 289 F.3d 801 (Fed. Cir. 2002), 5-62

Centillion Data Sys., LLC v. Convergys Corp., 2006 U.S. Dist. LEXIS 846 (S.D. Ind. Jan. 4, 2006), 4-13

Central Admixture Pharm. Servs. v. Advanced Cardiac Solutions, P.C., 482 F.3d 1347 (Fed. Cir. 2007), 2-24

Centricut, LLC v. Esab Group, Inc., 390 F.3d 1361 (Fed. Cir. 2004), 11-56

Chamberlain Group, Inc. v. Lear Corp., 516 F.3d 1331 (Fed. Cir. 2008), 3-8

Checkpoint Sys. v. All-Tag Sec. S.A., 412 F.3d 1331 (Fed. Cir. 2005), 2-19

Chef Am., Inc. v. Lamb-Weston, Inc., 358 F.3d 1371 (Fed. Cir. 2004), 5-73

Chem-Tainer Indus. v. Wilkin, 1997 U.S. Dist. LEXIS 17241 (C.D. Cal. Feb. 24, 1997), 3-19

Chemcast Corp. v. Arco Indus. Corp., 913 F.2d 923 (Fed. Cir. 1990), 11-35

Chevron U.S.A., Inc. v. Natural Res. Def. Council, Inc., 467 U.S. 837 (1984), 11-10

Chimie v. PPG Indus., Inc., 402 F.3d 1371 (Fed. Cir. 2005), 5-56

Chiron Corp. v. Genentech, Inc., 363 F.3d 1247 (Fed. Cir. 2004), 7-8

Chiuminatta Concrete Concepts, Inc. v. Cardinal Indus., Inc., 145 F.3d 1303 (Fed. Cir. 1998), 11-65

Christianson v Colt Indus. Operating Group, 486 U.S. 800 (1988), 2-30

Christo v. Padgett, 223 F.3d 1324 (11th Cir. 2002), 5-82, 5-83

Circle R v. Smithco Mfg., 919 F. Supp. 1272 (N.D. Iowa 1996), 3-6, 3-11

City of Elizabeth v. Am. Nicholson Pavement Co., 97 U.S. 126 (1877), 11-44

Classen Immunotherapies v. Biogen Idec, 2008 WL 5273107 (Fed. Cir. 2008), 6-17

Cole v. Kimberly-Clark Corp., 102 F.3d 524 (Fed. Cir. 1996), 5-71, 11-58, 11-59

Comark Commc'ns, Inc. v. Harris Corp., 156 F.3d 1182 (Fed. Cir. 1998), 5-54, 5-55

Commissariat a L'Energie Atomique v. Dell Computer Corp., 2004 U.S. Dist. LEXIS 12782 (D. Del. 2004), 4-21

Commonwealth Scientific and Indust. Research Org. (CSIRO) v. Buffalo Tech. Inc., 492 F. Supp. 2d 600 (E.D. Tex. 2007), 3-13

Conoco Inc. v. Energy & Envtl. Int'l, 460 F.3d 1349 (Fed. Cir. 2006), 5-35

Consol. Aluminum Corp. v. Foseco Int'l Ltd., 910 F.2d 804 (Fed. Cir. 1990), 11-71

Constant v. Advanced Micro-Devices, Inc., 848 F.2d 1560 (Fed. Cir. 1988), 11-38

Cook Biotech Inc. v. Acell, Inc., 460 F.3d 1365 (Fed. Cir. 2006), 11-60

Cooper Cameron Corp. v. Kvaerner Oilfield Prods., Inc., 291 F.3d 1317 (Fed. Cir. 2002), 11-39

Cooper Technologies Co. v. Dudas, 536 F.3d 1330 (Fed. Cir. 2008), 11-10, 11-24

Cordis Corp. v. Medtronic AVE, Inc., 339 F.3d 1352 (Fed. Cir. 2003), 5-43

Cornell Research Found., Inc. v. Hewlett Packard Co., 223 F.R.D. 55 (N.D.N.Y. 2003), 4-17

Critical-Vac Filtration Corp. v. Minuteman Int'l, Inc., 233 F.3d 697 (2d Cir. 2000), 2-25

Critikon, Inc. v. Becton Dickinson Vascular Access, Inc., 120 F.3d 1253 (Fed. Cir. 1997), 11-71, 11-72

Cross Med. Prods., Inc. v. Medtronic Sofamor Danek, Inc., 424 F.3d 1293 (Fed. Cir. 2005), 5-61

Crown Die & Tool Co. v. Nye Tool & Mach. Works, 261 U.S. 24 (1923), 2-15

Crucible, Inc. v. Stora Kopparbergs Bergslags AB, 594 F. Supp. 1249 (W.D. Pa. 1985), 9-10

Crystal Semiconductor Corp. v. TriTech Microelectronics Int'l, Inc., 246 F.3d 1336 (Fed. Cir. 2001), 11-79, 11-80

Cummins-Allison Corp. v. Glory Ltd., 2003 U.S. Dist. LEXIS 23653 (N.D. Ill. Dec. 31, 2003), 4-21

Cuno Engineering Corp. v. Automatic Devices Corp., 314 U.S. 84, 91 (1941), 11-46

Curtiss-Wright Flow Control Corp. v. Velan, Inc., 438 F.3d 1374 (Fed. Cir. 2006), 5-60

Custom Accessories, Inc. v. Jeffrey-Allen Indus., Inc., 807 F.2d 955 (Fed. Cir. 1986), 11-50

CVI/Beta Ventures v. Custom Optical Frames, 859 F. Supp. 945 (D. Md. 1994), 3-18, 3-19

CVI/Beta Ventures, Inc. v. Tura LP, 112 F.3d 1146 (Fed. Cir. 1997), 2-8

CyberSource Corp. v. Retail Decisions, Inc., 04-CV-03268-MHP (C.D. Cal. 2009), 6-17

CyberSource Corp. v. Retail Decisions, Inc., No. C-04-03268-MHP (N.D. Cal. Mar. 27, 2009), 6-7

Cybor Corp. v. FAS Techs., Inc., 138 F.3d 1448 (1998), 5-18, 5-34, 11-58

CytoLogix Corp. v. Ventana Med. Sys., Inc., 424 F.3d 1168 (Fed. Cir. 2005), 5-9, 5-27, 8-34

Dabney v. Montgomery Ward & Co., Inc., 761 F.2d 494 (8th Cir. 1985)

Dana v. E.S. Originals, Inc., 342 F.3d 1320 (Fed. Cir. 2003), 5-82

Dane Indus. v. Ameritek Indus., LLC, 154 Fed. Appx. 894 (Fed. Cir. 2005), 2-19

Data Gen. Corp. v. Johnson, 78 F.3d 1556 (Fed. Cir. 1996), 5-85 n.8

Datamize, LLC v. Plumtree Software, Inc., 417 F.3d 1342 (Fed. Cir. 2005), 5-75, 6-7, 11-36

Datascope Corp. v. SMEC, Inc., 879 F. Supp. 820 (Fed. Cir. 1989), 8-33

Davis v. Wakelee, 156 U.S. 680, 689 (1895), 5-78

Dawson Chem. Co. v. Rohm & Haas Co., 448 U.S. 176 (1980), 11-57

DeBenedetto v. Goodyear Tire & Rubber Co., 754 F.2d 512 (4th Cir. 1985), 8-21

Deepsouth Packing Co. v. Laitram Corp., 406 U.S. 518 (1972, 11-66
Default Proof Credit Card Sys., Inc. v. Home Depot U.S.A., Inc., 412 F.3d 1291 (Fed. Cir. 2005), 5-75
Dentsply Int'l, Inc. v. Kerr Mfg. Co., 42 F. Supp. 2d 385 (D. Del. 1999), 3-22
Depuy Spine, Inc. v. Medtronic Sofamor Sanek, Inc., 469 F.3d 1005 (Fed. Cir. 2006), 5-70, 5-71
Diamond Rubber Co. v. Consol. Rubber Tire Co., 220 U.S. 428 (1911), 11-52
Diamond Scientific Co. v. Ambico, Inc., 848 F.2d 1220 (Fed. Cir. 1988), 2-18
Diamond v. Chakrabarty, 447 U.S. 303 (1980), 11-27
Diamond v. Diehr, 450 U.S.175 (1981), 11-28
Dippin' Dots, Inc. v. Mosey, 476 F.3d 1337 (Fed. Cir. 2007), 7-9
Doctor's Assocs., Inc. v. Distajo, 107 F.3d 126 (2d Cir. 1997), 3-25
Door-Master Corp. v. Yorktowne, Inc., 256 F.3d 1308 (Fed. Cir. 2001), 9-7
Dow Chem. Co. v. Mee Indus., 341 F.3d 1370 (Fed. Cir. 2003), 8-32
Dow Chem. Comp. v. Astro-Valcour, Inc., 267 F.3d 1334 (Fed. Cir. 2001), 11-41
DSU Med. Corp. v. JMS Co., 471 F.3d 1293 (Fed. Cir. 2006), 7-12
DSU Medical Corp. v. JMS Co., Ltd., 471 F.3d 1293 (Fed. Cir. 2006), 11-56
Dunn v. Truck World, Inc., 929 F.2d 311 (7th Cir. 1991), 9-2
Duquesne Light Co. v. Westinghouse Elec. Corp., 66 F.3d 604 (3d Cir. 1995), 8-10, 8-11
Duro-Last, Inc. v. Custom Seal, Inc., 321 F.3d 1098 (Fed. Cir. 2003), 8-33, 9-12
DUSA Pharms., Inc. v. River's Edge Pharms., 2007 U.S. Dist. LEXIS 16005 (D.N.J. Mar. 6, 2007), 3-16
Dynacore Holdings Corp. v. U.S. Philips Corp., 363 F.3d 1263 (Fed. Cir. 2004), 7-23, 11-56
Dynacore Holdings Corp. v. U.S. Philips Corp., 243 F. Supp. 2d 31 (S.D.N.Y. 2003), 5-79
E-Pass Techs., Inc. v. 3Com Corp., 473 F.3d 1213 (Fed. Cir. 2007), 9-11
E. I. du Pont de Nemours & Co. v. Phillips Petroleum Co., 835 F.2d 277 (Fed. Cir. 1987), 3-30, 9-10
E.I. du Pont de Nemours & Co. v. Phillips Petroleum Co., 849 F.2d 1430 (Fed. Cir. 1988), 5-69
Eagle Comtronics, Inc. v. Arrow Commc'n Labs., Inc., 305 F.3d 1303 (Fed. Cir. 2002), 11-61
Eaton Corp. v. Appliance Valves Corp., 792 F.2d 874 (Fed. Cir. 1986), 7-35
Eaton Corp. v. United States, 29 C.I.T. 1149 (Ct. Int'l Trade 2005), 3-8
eBay Inc. v. MercExchange, L.L.C., 547 U.S. 388 (2006), 3-3, 3-4, 3-6, 3-13, 9-2, 11-77, 11-78
Ecolab, Inc. v. Paraclipse, Inc., 285 F.3d 1362 (Fed. Cir. 2002), 9-8
Ecrix Corp. v. Exabyte Corp., 191 F.R.D. 611 (D. Colo. 2000), 4-18
Edberg v. CPI-The Alternative Supplier, Inc., 156 F. Supp. 2d 190 (D. Conn. 2001), 5-82
Eibel Process Co. v. Minn. & Ont. Paper Co., 261 U.S. 45 (1923), 11-52
Eisai Co. v. Teva Pharms. USA, Inc., 2008 U.S. Dist. LEXIS 33747 (D.N.J. Mar. 28, 2008), 3-25
Elan Pharms., Inc. v. Mayo Found. for Med. Educ. and Research, 346 F.3d 1051 (Fed. Cir. 2003), 11-37
Elbex Video, Ltd. v. Sensormatic Elecs. Corp., 508 F.3d 1366 (Fed. Cir. 2007), 5-51 n.5, 5-87 n.9
Electro Scientific. Indus. v. Gen. Scanning, Inc., 247 F.3d 1341 (Fed. Cir. 2001), 9-5
Elekta Instrument S.A. v. O.U.R. Scientific Int'l, Inc., 214 F.3d 1302 (Fed. Cir. 2000), 5-69

Eli Lilly & Co. v. Am. Cyanamid Co., 82 F.3d 1568 (Fed. Cir. 1996), 11-67

Eli Lilly & Co. v. Barr Labs., Inc., 222 F.3d 973, 987 (Fed. Cir. 2000), 11-37

Eli Lilly & Co. v. Barr Labs., Inc., 251 F.3d 955 (Fed. Cir. 2001), 11-36, 11-75, 11-76

Eli Lilly & Co. v. Medtronic Inc., 872 F.2d 402 (Fed. Cir. 1989), 11-70

Eli Lilly & Co. v. Medtronic, Inc., 496 U.S. 661 (1990), 10-2, 10-3

Eli Lilly & Co. v. Teva Pharms. USA, Inc., Case No. 2009-1071, slip op. at 9 (Fed. Cir. Feb. 24, 2009), 10-7

Emerson Elec. Co. v. Davoil, Inc., 88 F.3d 1051 (Fed. Cir. 1996), 2-28

EMI Group N. Am., Inc. v. Intel Corp., 157 F.3d 887 (Fed. Cir. 1998), 5-18

Energizer Holdings, Inc. v. Int'l Trade Comm'n, 435 F.3d 1366 (Fed. Cir. 2006), 5-75

Energy Transp. Group, Inc. v. William Demant Holding, 2008 WL 114861 (D. Del.), 2-23

Environ Prods. v. Total Containment, 41 U.S.P.Q.2d (BNA) 1302 (E.D. Pa. Aug. 21, 1996), 4-20

Environ Prods., Inc. v. Total Containment, Inc., 951 F. Supp. 57, 59 (E.D. Pa. 1996), 2-9

Environmental Designs, Ltd. v. Union Oil Co., 713 F.2d 693 (Fed. Cir. 1983), 11-47

Envtl. Designs, Ltd. v. Union Oil Co., 713 F.2d 693 (Fed. Cir. 1983), 11-47

Enzo Biochem, Inc. v. Gen-Probe, Inc., 323 F.3d 956 (Fed. Cir. 2002), 11-34

Eon-Net, L.P. v. Flagstar Bancorp, Inc., 222 F. App'x 970 (Fed. Cir. 2007), 3-29

Erico Int'l Corp. v. Vutec Corp., 516 F.3d 1350 (Fed. Cir. 2008), 3-9

Ethicon Endo-Surgery, Inc. v. U.S. Surgical Corp., 149 F.3d 1309 (Fed. Cir. 1998), 9-11

Ethicon v. U.S. Surgical Corp., 135 F.3d 1456 (Fed. Cir. 1998), 8-5, 11-55

Ethicon, Inc. v. Quigg, 849 F.2d 1422 (Fed. Cir. 1988), 11-23

Exxon Research and Eng'g Co. v. United States, 265 F.3d 1371 (Fed. Cir. 2001), 5-43

Eyeticket Corp. v. Unisys Corp., 155 F. Supp. 2d 527 (E.D. Va. 2001), 3-15, 3-21

F & G Scrolling Mouse L.L.C. v. IBM Corp., 190 F.R.D. 385 (M.D.N.C. 1999), 8-3, 8-7

Fairchild Semiconductor Corp. v. Third Dimension (3D) Semiconductor, Inc., 564 F. Supp. 2d 63 (D. Me. 2008), 3-17

Fantasy Sports Properties, Inc. v. Sportsline.com, Inc., 287 F.3d 1108 (Fed. Cir. 2002), 5-61

Fed. Trade Comm'n v. Freecom Commc'ns, Inc., 401 F.3d 1192 (10th Cir. 2005), 2-40

Ferag AG v. Quipp Inc., 45 F.3d 1562 (Fed. Cir. 1995), 11-45.

Ferguson Beauregard/Logic Controls, Inc. v. Mega Sys., LLC, 350 F.3d 1327 (Fed. Cir. 2003), 2-23, 4-15

Ferguson-Beauregard v. Mega Sys. LLC, 350 F.3d 1327 (Fed. Cir. 2003), 7-35

Festo Corp. v. Shoketsu Kinzoku Kabushiki Co., 344 F.3d 1359 (Fed. Cir. 2003), 11-62

Festo Corp. v. Shoketsu Kinzoku Kogyo Kabushiki Co., Ltd., 535 U.S. 722 (2002), 6-20, 11-62

Fieldturf, Inc. v. Sw. Recreational Indus. Inc., 357 F.3d 1266 (Fed. Cir. 2004), 2-14

Fiers v. Revel, 984 F.2d 1164 (Fed. Cir. 1993), 11-33

Finisar Corp. v. DirecTV Group, Inc., 523 F.3d 1323 (Fed. Cir. 2008), 5-84, 5-86

Fla. Prepaid Postsecondary Educ. Expense Bd. v. College Sav. Bank, 527 U.S. 627 (1999), 11-71

Forest Labs., Inc. v. Ivax Pharms., Inc., 501 F.3d 1263(Fed. Cir. 2007), 6-14

Fort Properties, Inc. v. American Master Lease, LLC, 2009 WL 249205 (C.D. Cal. Jan. 22 2009), 6-7

Fowler v. City of New York, 121 F. 747 (2d Cir. 1903), 11-30

Francklyn v. Guilford Packing Co., 695 F.2d 1158 (9th Cir. 1983), 11-69

Frazier v. Layne Christensen Co., 239 F. Appx. 604 (Fed. Cir. 2007), 7-10

Freedman Seating Co. v. Am. Seating Co., 420 F.3d 1350 (Fed. Cir. 2005), 11-61

Fresenius Med. Care Holdings, Inc. v. Baxter Int'l, Inc., 2006 U.S. Dist. LEXIS 36788 (N.D. Cal. May 24, 2006), 5-44

Fresenius Med. Care Holdings, Inc. v. Baxter Int'l, Inc., No. C 03-1431 SBA, 2007 U.S. Dist. LEXIS 44107 (N.D. Cal. June 6, 2007), 2-28

Fromson v. W. Litho Plate & Supply Co., 853 F.2d 1568 (Fed. Cir. 1988), 7-24, 7-27

FTC v. Enforma Natural Products, Inc., 362 F.3d 1204 (9th Cir. 2004), 8-24

Fuji Photo Film Co. v. Jazz Photo Corp., 394 F.3d 1368 (Fed. Cir. 2005)11-83

Fuji Photo Film Co., Ltd. v. Int'l Trade Comm'n, 386 F,3d 1095 (Fed. Cir. 2004), 5-87 n.9

Funk Brothers Seed Co. v. Kalo Inoculant Co., 333 U.S. 127 (1948), 11-26

Furminator, Inc. v. Ontel Prods. Corp., 246 F.R.D. 579, 581 (E.D. Mo. 2007), 3-20

Gaia Techs., Inc. v. Reconversion Techs., Inc., 104 F.3d 1296 (Fed. Cir. 1996), 2-30

Gambro Lundia AB v. Baxter Healthcare Corp., 110 F.3d 1573 (Fed. Cir. 1997), 11-43

Gammino v. Cellco P'ship, 2005 U.S. Dist. LEXIS 21557 (E.D. Pa. 2005), 2-8

Gardco Mfg., Inc. v. Herst Lighting Co., 820 F.2d 1209 (Fed. Cir. 1987), 4-17. 7-33, 8-4

Garretson v. Clark, 111 U.S. 120 (1884), 7-16, 11-82

Gaus v. Conair Corp., 363 F.3d 1284 (Fed. Cir. 2004), 11-63

Geders v. United States, 425 U.S. 80 (1976), 8-16

Gemstar-TV Guide v. Int'l Trade Comm'n, 383 F.3d 1352 (Fed. Cir. 2004), 5-54

Gen-Probe Inc. v. Vysis, Inc., 359 F.3d 1376 (Fed. Cir. 2004), 2-19

Gen. Atomics v. Axis-Shield ASA, No. C 05-04074 SI, 2006 U.S. Dist. LEXIS 58939 (N.D. Cal. Aug. 7, 2006), 2-21

Gen. Elec. Co. v. Industra Prods., Inc., 683 F. Supp. 1254 (N.D. Ind. 1988), 4-20

Gen. Mills, Inc. v. Hunt-Wesson, Inc., 103 F.3d 978 (Fed. Cir. 1997), 2-7

Gen. Motors Corp. v. Devex Corp., 461 U.S. 648 (1983), 11-84

Gen. Signal Corp. v. MCI Telecomms. Corp., 66 F.3d 1500 (9th Cir. 1995), 8-13

Genal Strap, Inc. v. Dar, 2006 U.S. Dist. LEXIS 11474 (E.D.N.Y. Mar 3, 2006), 4-20

Genentech, Inc. v. Amgen, Inc., 289 F.3d 761 (Fed. Cir. 2002), 2-10

Genentech, Inc. v. Insmed Inc., 442 F. Supp. 2d 838 (N.D. Cal. 2006), 2-22

Genentech, Inc. v. Novo Nordisk A/S, 108 F.3d 1361 (Fed. Cir. 1997), 3-28

Generation II Orthotics Inc. v. Med. Tech. Inc., 263 F.3d 1356 (Fed. Cir. 2001), 5-69

Gentry Gallery, Inc. v. Berkline Corp., 134 F.3d 1473 (Fed. Cir. 1998), 11-33

Georgia-Pacific Corp. v. U.S. Plywood Corp., 318 F. Supp. 1116 (S.D.N.Y. 1970), 4-21, 7-14, 7-24, 11-80

Gerber Garment Tech., Inc. v. Letra Sys., 916 F.2d 683 (Fed. Cir. 1990), 11-75

Giese v. Pierce Chem. Co., 29 F. Supp. 2d 33 (D. Mass. 1998), 2-20

Gindes v. United States, 740 F.2d 947 (Fed. Cir. 1984), 9-11

Gladish v. Tyco Toys, No. S-92-1666 WBS, 1993 U.S. Dist. LEXIS 20211 (E.D. Cal. 1993), 2-28

Glaxo Group Ltd. v. Apotex, Inc., 376 F.3d 1339 (Fed. Cir. 2004), 8-31, 11-36

Glaxo Group Ltd. v. Ranbaxy Pharms., Inc., 262 F.3d 1333 (Fed. Cir. 2001), 3-5, 5-33, 5-44

Golden Blount, Inc. v. Robert H. Peterson Co., 438 F.3d 1354 (Fed. Cir. 2006), 7-43

Golight, Inc. v. Wal-Mart Stores, Inc., 355 F.3d 1327 (Fed. Cir. 2004), 5-59

Gottschalk v. Benson, 409 U.S. 63 (1972), 11-26, 11-28

Graco Children's Prods., Inc. v. Regalo Int'l, 77 F. Supp. 2d 660 (E.D. Pa. 1999), 5-82, 5-83

Graham v. John Deere Co. of Kansas City, 383 U.S. 1 (1966), 5-80, 6-17, 7-9, 8-31, 11-47, 11-50, 11-53

Granny Goose Foods, Inc. v. Bhd. of Teamsters Local 70, 415 U.S. 423 (1974), 3-18

Graver Tank & Mfg. Co. v. Linde Air Prods. Co., 339 U.S. 605 (1950), 11-60, 11-66

Great A & P Tea Co. v. Supermarket Equipment Corp., 340 U.S. 147 (1950), 11-46

Greenberg v. Ethicon Endo-Surgery, Inc., 91 F.3d 1580 (Fed. Cir. 1996), 5-70, 11-59

Griffith v. Kanamaru, 816 F.2d 624 (Fed. Cir. 1987), 11-41

Group One, Ltd. v. Hallmark Cards, Inc., 407 F.3d 1297 (Fed. Cir. 2005), 5-73, 5-74

Gulf Oil Corp. v. Gilbert, 330 U.S. 501 (1947), 2-31

Guttman, Inc. v. Kopykake Enters., 302 F.3d 1352 (Fed. Cir. 2002), 3-5, 5-81, 9-12

Gyromat Corp. v. Champion Spark Plug Co., 735 F.2d 549 (Fed. Cir. 1984), 11-84

H.H. Robertson Co. v. U.S. Deck, Inc., 820 F.2d 384 (Fed. Cir. 1987), 3-7

H.H. Robertson Co., Cupples Prods. Div. v. V.S. DiCarlo Gen. Contractors, Inc., 950 F.2d 572 (8th Cir. 1991), 8-18

Hahn v. Wong, 892 F.2d 1028 (Fed. Cir. 1989), 11-40

Hakim v. Cannon Avent Group, PLC, 479 F.3d 1313 (Fed. Cir. 2007), 5-32

Halliburton Oil Well Cementing Co. v. Walker, 329 U.S. 1 (1946), 11-58

Handgards, Inc. v. Ethicon, Inc., 601 F.2d 986 (9th Cir. 1979), 2-25, 11-76

Hanson v. Alpine Valley Ski Area, Inc., 718 F.2d 1075 (Fed. Cir. 1983), 6-22, 7-26, 7-27

Harris Corp. v. Ericsson, 417 F.3d 1241 (Fed. Cir. 2005), 5-84

Hartley v. Mentor Corp., 869 F.2d 1469 (Fed. Cir. 1989), 5-79, 5-83

Helman vs. Murry's Steaks, Inc., 728 F. Supp. 1099 (D. Del. 1990), 4-8

Helmsderfer v. Bobrick Washroom Equip., Inc., 527 F.3d 1379 (Fed. Cir. 2008), 5-53

Hewlett-Packard Co. v. Repeat-O-Type Stencil Mfg. Co., 123 F.3d 1445 (Fed. Cir. 1997), 11-68

Hickman v. Taylor, 329 U.S. 495 (1947), 2-22

High Tech. Med. Instr., Inc. v. New Image Indus., Inc., 49 F.3d 1551 (Fed. Cir. 1995), 3-12

Hilgraeve, Inc. v. Symantec Corp., 272 F. Supp. 2d 613 (E.D. Mich. 2003), 8-33

Hilleby v. FMC Corp., 25 U.S.P.Q.2d 1413 (N.D. Cal. 1992), 8-7

Hilton v. Braunskill, 481 U.S. 770 (1987), 3-29

Hirst v. Gertzen, 676 F.2d 1252 (9th Cir. 1982), 8-3

Hoechst Celanese Corp. v. BP Chems. Ltd., 78 F.3d 1575 (Fed. Cir. 1996), 3-17

Hoffer v. Microsoft Corp., 405 F.3d 1326 (Fed. Cir. 2005), 5-74

Holmes Group, Inc. v. Vornado Air Circulation Sys., Inc., 535 U.S. 826 (2002), 2-30, 11-87

Home Diagnostics Inc. v. Lifescan, Inc., 120 F. Supp. 2d 864 (N.D. Cal. 2000), 5-81

Honeywell Int'l Inc. v. Hamilton Sundstrand Corp., 370 F.3d 1131 (Fed. Cir. 2004), 8-33, 9-12

Honeywell Int'l, Inc. v. ITT Indus., Inc., 452 F.3d 1312 (Fed. Cir. 2006), 5-56, 5-57

Honeywell Int'l, Inc. v. Universal Avionics Sys. Corp., 397 F. Supp. 2d 537 (D. Del. 2005), 3-30

Hormone Research Found. v. Genentech, Inc., 904 F.2d 1558 (Fed. Cir. 1990), 5-60

Hotchkiss v. Greenwood, 52 U.S. 248 (1850), 11-46

Hotel Sec. Checking Co. v. Lorraine Co., 160 F. 467 (2d Cir. 1908), 11-29

Humble Oil & Ref. Co. v. Bell Marine Serv., Inc., 321 F.2d 53 (5th Cir. 1963), 2-31

Hybritech Inc. v. Abbott Labs., 849 F.2d 1446 (Fed. Cir. 1988), 3-4, 3-8, 3-14, 3-15, 11-77

Hybritech Inc. v. Monoclonal Antibodies, Inc., 802 F.2d 1367 (Fed. Cir. 1986), 11-35, 11-52

Hydranautics v. FilmTec Corp., 70 F.3d 533 (9th Cir. 1995), 2-25

Hygh v. Jacobs, 961 F.2d 359 (2d Cir. 1992), 7-21

Ill. Tool Works, Inc. v. Grip-Pak, Inc., 906 F.2d 679 (Fed. Cir. 1990), 3-7 n.2, 3-8, 3-10, 3-14

Imagexpo, L.L.C. v. Microsoft Corp. 284 F. Supp. 2d 365 (E.D. Va. 2003), 8-33

IMAX Corp. v. In-Three, Inc., 385 F. Supp. 2d 1030 (C.D. Cal. 2005), 2-28

IMX, Inc. v. Lendingtree, LLC, 79 U.S.P.Q.2d 1373 (D. Del. 2005), 11-82

In re Adobe Sys., Inc. Sec. Litig., 141 F.R.D. 155 (N.D. Cal. 1992), 8-17

In re Bilski, 545 F.3d 943 (Fed. Cir. 2008), 2-12, 6-7, 6-17, 11-27, 11-29, 11-30

In re Ciprofloxacin Hydrochloride Antitrust Litigation, 2008 U.S. App. LEXIS 12504 (Fed. Cir. Oct. 15, 2008), 10-11

In re Clay, 966 F.2d 656 (Fed. Cir. 1992), 11-50

In re Comiskey, 499 F.3d 1365 (Fed. Cir. 2007), 11-30

In re Convergent Techs. Sec. Litig., 108 F.R.D. 328 (N.D. Cal. 1985), 4-4

In re Convertible Rowing Exerciser Patent Litig., 903 F.2d 822 (Fed. Cir. 1990), 11-87

In re Cruciferous Sprout Litig., 301 F.3d 1343 (Fed. Cir. 2004), 5-62

In re Cygnus Telecomms. Tech., 385 F. Supp. 2d 1022 (N.D. Cal. 2005), 2-27

In re Dembiczak, 175 F.3d 994, 999 (Fed. Cir. 1999), 6-13

In re EchoStar Commc'ns. Corp., 448 F.3d 1294 (Fed. Cir. 2006), 2-22

In re Excel Innovations, Inc., 502 F.3d 1086 (9th Cir. 2007), 2-26

In re Fisher, 424 F.3d 1365 (Fed. Cir. 2005), 11-32

In re Foster, 343 F.2d 980 (CCPA 1965), 11-49

In re Freeman, 30 F.3d 1459 (Fed. Cir. 1994), 5-78–5-80

In re Gay, 309 F.2d 769 (C.C.P.A. 1962), 11-35

In re Graham, 973 F.2d 1089 (3d Cir. 1992), 5-83

In re Hall, 781 F.2d 897 (Fed. Cir. 1986), 11-39

In re Horseshoe Entm't, 337 F.3d 429 (5th Cir. 2003), 2-32

In re Icon Health & Fitness, Inc., 469 F.3d 1374 (Fed. Cir. 2007), 7-10

In re Indep. Serv. Orgs. Antitrust Litig., 203 F.3d 1322 (Fed. Cir. 2000), 11-76

In re Innotron Diagnostics, 800 F.2d 1077 (Fed. Cir. 1986), 4-17, 8-8

In re Kathawala, 9 F.3d 942 (Fed. Cir. 1993), 11-45, 11-46

In re Klopfenstein, 380 F.3d 1345 (Fed. Cir. 2004), 11-39

In re Lumenis, Inc., 89 F. Appx, 255, 256 (Fed. Cir. 2004), 3-28

In re Minebea Co., 143 F.R.D. 494 (S.D.N.Y. 1992), 4-19

In re Nuijten, 500 F.3d 1346 (Fed. Cir. 2007), 11-27

In re O'Farrell, 853 F.2d 894 (Fed. Cir. 1988), 11-54

In re Paulsen, 30 F.3d 1475 (Fed. Cir. 1994), 11-50

In re Princo Corp., 478 F.3d 1345 (Fed. Cir. 2007), 2-27

In re Rhone-Poulenc Rorer, 1998 U.S. App. LEXIS 12829 (Fed. Cir. 1998), 2-24

In re Schering-Plough Corp., 136 F.T.C. 956 (2003), 10-10

In re Seagate Tech. LLC, 497 F.3d 1360 (Fed. Cir. 2007), 2-22, 3-3, 3-4, 3-9, 4-18, 6-23, 7-11, 7-43, 8-5, 8-6, 9-6, 11-83, 11-84

In re Smith, 714 F.2d 1127 (Fed. Cir. 1983), 11-44

In re Spalding Sports Worldwide, Inc., 203 F.3d 800 (Fed. Cir. 2000), 2-10, 4-19

In re Swanson, 540 F.3d 1368 (Fed. Cir. 2008), 11-24

In re Tamoxifen Citrate Antitrust Litig., 429 F.3d 370 (2d Cir. 2005), 10-10

In re Trans Tex. Holdings Corp., 498 F.3d 1290 (Fed. Cir. 2007), 7-9

In re TS Tech USA Corp., 551 F.3d 1315 (Fed. Cir. 2008), 2-31

In re Vaeck, 947 F.2d 488 (Fed. Cir. 1991), 11-34.

In re Vogel, 422 F.2d 438 (CCPA 1970), 11-76

In re Volkswagen of Am., Inc., 545 F.3d 304 (5th Cir. 2008), 2-31

In re Wands, 858 F.2d 731 (Fed. Cir. 1988), 6-14, 11-34

In-Tech Mktg. Inc. v. Hasbro, Inc., 685 F. Supp. 436 (D.N.J. 1988), 2-20

Inamed Corp. v. Kuzmak, 249 F.3d 1356 (Fed. Cir. 2001), 2-29

Indep. Wireless Tel. Co. v. Radio Corp. of Am., 269 U.S. 459 (1926), 2-15, 2-20

Informatica Corp. v. Bus. Objects Data Integration, 2006 U.S. Dist. LEXIS 58976 (N.D. Cal. 2006), 2-22

Innogenetics, N.V. v. Abbott Labs., 512 F.3d 1363 (Fed. Cir. 2008), 9-3

Innovad Inc. v. Microsoft Corp., 260 F.3d 1326 (Fed. Cir. 2001), 5-78
Inpro II Licensing, S.A.R.L. v. T-Mobile USA, Inc., 450 F.3d 1350 (Fed. Cir. 2006), 5-57
Insituform Techs., Inc. v. Cat Contracting, Inc., 161 F.3d 688 (Fed. Cir. 1998), 11-57
Int'l Game Tech. v. WMS Gaming Inc., 1999 U.S. App. LEXIS 22971 (Fed. Cir. Sept. 3, 1999), 3-24
Intamin Ltd. v. Magnetar Techs. Corp., 483 F.3d 1328 (Fed. Cir. 2007), 4-14
Integra Lifesciences I, Ltd. v. Merck KGaA, 496 F.3d 1334 (Fed. Cir.), 11-70
Intel Corp. v U.S. Int'l Trade Comm'n, 946 F.2d 821 (Fed. Cir. 1991), 2-18
Intel Corp. v. ULSI Sys. Tech., Inc., 995 F.2d 1566 (Fed. Cir. 1993), 3-3, 11-77
Intellectual Prop. Dev., Inc. v. TCI Cablevision of Cal., Inc., 248 F.3d 1333 (Fed. Cir. 2001), 2-14, 2-15
Intertool, Ltd. v. Texar Corp., 369 F.3d 1289 (Fed. Cir. 2004), 5-62
Invitrogen Corp. v. Clontech Labs., Inc., 429 F.3d 1052 (Fed. Cir. 2005), 5-32
IPPV Enters., LLC v. Echostar Commc'ns Corp., 106 F. Supp. 2d 595 (D. Del. 2000), 5-22
IPXL Holdings, L.L.C. v. Amazon.com, Inc., 430 F.3d 1377 (Fed. Cir. 2005), 5-75
Isr. Bio-Eng'g Project v. Amgen Inc., 475 F.3d 1256 (Fed. Cir. 2007), 2-14
J.P. Stevens Co. v. Lex Tex Ltd., 822 F.2d 1047 (Fed. Cir. 1987), 9-7
Jack Guttman, Inc. v. Kopykake Enters., Inc., 302 F.3d 1352 (Fed. Cir. 2002). 3-9
Jackson Jordan, Inc. v. Plasser Am. Corp., 747 F.2d 1567 (Fed. Cir. 1984), 5-83
Jamesbury Corp. v. Litton Indus. Prods. Inc., 756 F.d 1556, 1563 (Fed. Cir. 1985), 6-13
Jervis B. Webb Co. v. S. Sys., Inc., 742 F.2d 1388(Fed. Cir. 1984), 11-26
Joblove v. Barr Labs, Inc., 429 F.3d 370 (2d Cir. 2005), 2-47
Johns Hopkins Univ. v. CellPro, 160 F.R.D. 30 (D. Del. 1995), 8-3
Johnson & Johnston Assocs. Inc. v. R.E. Serv. Co., 285 F.3d 1046 (Fed. Cir. 2002), 11-64
Joy Techs, Inc. v. Flakt, Inc., 722 F. Supp. 842 (D. Del. 1991), 4-22
Joy Techs., Inc. v. Flakt, Inc., 6 F.3d 770 (Fed. Cir. 1993), 2-20
Judin v. United States, 110 F.3d 780 (Fed. Cir. 1997), 2-29
Juicy Whip, Inc. v. Orange Bang, Inc., 292 F.3d 728 (Fed. Cir.), 11-32
Jurgens v. CBK, Ltd., 80 F.3d 1566 (Fed. Cir. 1996), 9-6
Jurgens v. McKasy, 927 F.2d 1552 (Fed. Cir. 1991), 9-12
JVW Enters., Inc. v. Interact Accessories, Inc., 424 F.3d 1324, 1330 (Fed. Cir. 2005), 5-71
Kaspar Wire Works, Inc. v. Leco Eng'g and Mach., Inc., 575 F.2d 530 (5th Cir. 1978), 5-82
Katz v. Batavia Marine & Sporting Supplies, Inc., 984 F.2d 422 (Fed. Cir. 1993), 4-22
Katz v. Lear Siegler, Inc., 909 F.2d 1459 (Fed. Cir. 1990), 2-14
Kaufman Co. v. Lantech, Inc., 807 F.2d 970 (Fed. Cir. 1986), 11-26
Kaufman Co. v. Lantech, Inc., 926 F.2d 1136 (Fed. Cir. 1991), 8-33
KCJ Corp. v. Kinetic Concepts, Inc., 223 F.3d 1351 (Fed. Cir. 2000), 5-63
Key Pharms. v. Hercon Labs. Corp., 161 F.3d 709 (Fed. Cir. 1998), 5-30
Keystone Driller Co. v. Gen. Excavator Co., 290 U.S. 240(1933), 11-71

Kimball ex rel. Kimball v. RJ Reynolds Tobacco Co., No. C03-664JLR, 2006 U.S. Dist. LEXIS 27138 (W.D. Wash. April 26, 2006), 7-39

Kimberly-Clark Corp. v. James River Corp., 131 F.R.D. 607 (N.D. Ga. 1989), 8-3

King Instrument Corp. v. Otari Corp., 767 F.2d 853 (Fed. Cir. 1985), 7-14

King Instruments Corp. v. Perego, 65 F.3d 941 (Fed. Cir. 1995), 11-79

King Pharmaceuticals, Inc. v. Eon Labs, Inc., 593 F. Supp. 2d 501 (E.D.N.Y. 2009), 61-7

Kingsdown Med. Consultants, Ltd. v. Hollister, Inc., 863 F.2d 867 (Fed. Cir. 1988), 4-20

Knorr-Bremse Systeme Fuer Nutzfahrzeuge GmbH v. Dana Corp., 372 F. Supp. 2d 833 (E.D. Va. 2005), 9-7

Knorr-Bremse Systeme Fuer Nutzfahrzeuge GmbH v. Dana Corp., 383 F.3d 1337 (Fed. Cir. 2004), 7-12, 7-24, 7-27, 7-43

Knorr-Bremse Systeme Fuer Nutzfahrzeuge GmbH v. Dana Corp., 383 F.3d 1337 (Fed. Cir. 2004), 11-83

Kollmorgen Corp. v. Yaskawa Elec. Corp., 147 F. Supp. 2d 464 (W.D. Va. 2001), 5-79

Kollmorgen Corp. v. Yaskawa Elec. Corp., 147 F. Supp. 2d 464 (W.D. Va. 2001), 5-79, 5-80

Kori Corp. v. Wilco Marsh Buggies & Draglines, Inc., 761 F.2d 649 (Fed. Cir. 1985), 7-14

Kropa v. Robie, 187 F.2d 150 (CCPA 1951), 5-62

KSM Fastening Sys., Inc. v. H.A. Jones Co., 776 F.2d 1522 (Fed. Cir. 1985), 3-30

KSR Int'l Co. v. Teleflex, Inc., 127 S. Ct. 1727 (2007), 8-31, 11-47, 11-53, 11-75

KSR Int'l Co. v. Teleflex Inc., 550 U.S. 398 (2007), 6-8, 6-137-8, 7-18, 7-38, 11-9, 11-26

Lab. Corp. of Am. Holdings v. Chiron Corp., 384 F.3d 1326 (Fed. Cir. 2004), 11-85, 11-86

Lab. Corp. of Am. Holdings v. Metabolite Labs., Inc., 548 U.S. 124 (2006), 11-27

Laitram Corp. v. Rexnord, Inc., 939 F.2d 1533 (Fed. Cir. 1991), 5-61

Lampi Corp. v. Am. Power Prods., Inc., 228 F.3d 1365 (Fed. Cir. 2000), 5-85

Larez v. City of Los Angeles, 946 F.2d 630 (9th Cir. 1991), 9-2

Lava Trading, Inc. v. Sonic Trading Management, LLC, 445 F.3d 1348 (Fed. Cir. 2006), 5-26

Lava Trading, Inc. v. Sonic Trading Mgmt. LLC, 445 F.3d 1348 (Fed. Cir. 2006), 6-5

Leapfrog Enters., Inc. v. Fisher-Price, Inc., 485 F.3d 1157 (Fed. Cir. 2007), 7-9

Leapfrog Enters., Inc. v. Fisher-Price, Inc., 485 F.3d 1157 (Fed. Cir. 2007), 11-54

LG Elecs., Inc. v. Bizcom Elecs., Inc., 453 F.3d 1364 (Fed. Cir. 2006), 5-59

LG Elecs., Inc. v. Q-Lity Computer, Inc., 211 F.R.D. 360 (N.D. Cal. 2002), 2-9

Linear Tech. Corp. v. Micrel Inc., 275 F.3d 1040 (Fed. Cir. 2001), 11-45

Linear Technology Corp. v. Impala Linear Corp., 31 Fed. Appx. 700 (Fed. Cir. 2002), 5-26

Litton Indus. Prods., Inc. v. Solid State Sys, Corp., 755 F.2d 158 (Fed. Cir. 1985), 11-48

LizardTech, Inc. v. Earth Res. Mapping, Inc., 424 F.3d 1336 (Fed. Cir. 2005), 11-33

Loew's Drive-In Theatres v. Park-In Theatres, 174 F.2d 547 (1st Cir. 1949), 11-29

Lough v. Brunswick Corp., 86 F.3d 1113 (Fed. Cir. 1996), 11-44

Lowery v. Stovall, 92 F.3d 219 (4th Cir. 1996), 5-85

Lucent Techs., Inc. v. Gateway, Inc., 2007 U.S. Dist. LEXIS 95934 (S.D. Cal. Oct. 30, 2007), 3-16–3-17

Lummus Co. v. Commonwealth Oil Ref. Co., 297 F.2d 80 (2d Cir. 1961), 5-82

Mackay Radio & Tel. Co. v. Radio Corp. of Am., 306 U.S. 86 (1939), 11-26

MacNeill Engin'g Co. v. Trisport, Ltd., 126 F. Supp. 2d 51 (D. Mass. 2001), 5-21 n.2

Madey v. Duke Univ., 307 F.3d 1351 (Fed. Cir. 2002), 11-69

Magarl, L.L.C. v. Crane Co., 2004 U.S. Dist. LEXIS 24283 (S.D. Ind. 2004), 5-5

Magna Donnelly Corp. v. Pilkington N. Am., Inc., No. 4:06-CV-126, 2007 U.S. Dist. LEXIS 175361 (W.D. Mich. March 12, 2007), 2-28

Mahurkar v. C.R. Bard Inc., 79 F.3d 1572 (Fed. Cir. 1996), 11-40, 11-41, 11-84

Malarkey v. Texaco, Inc., 794 F. Supp. 1248 (S.D.N.Y. 1992), 9-10

Malek v. Fed. Ins. Co., 994 F.2d 49 (2d Cir. 1993), 8-16

Mallinckrodt, Inc. v. Medipart, Inc., 976 F.2d 700 (Fed. Cir. 1992), 11-68

Markman v. Westview Instr., Inc., 52 F.3d 967 (Fed. Cir. 1995), 2-3, 2-5, 3-7, 5-41, 8-34

Markman v. Westview Instruments, 517 U.S. 370 (1996), 5-3, 5-27, 5-52, 5-76, 5-82, 5-86

Mars Inc. v. Kabushiki-Kaisha Nippon Conlux, 24 F.3d 1368 (Fed. Cir. 1994), 11-86

Mas-Hamilton Group v. LaGard, Inc., 156 F.3d 1206 (Fed.Cir. 1998), 5-71, 11-59

Masco Corp. v. United States, 49 Fed. Cl. 337 (Ct. Fed. Cl. 2001), 5-79

Mass. Inst. of Tech. v. Abacus Software, 462 F.3d 1344 (Fed. Cir. 2006), 5-36, 5-71, 6-5, 8-2

Mayeaux v. Am. Mut. Liberty Ins. Corp., 409 F.2d 508 (5th Cir. 1969)

MBO Labs., Inc. v. Becton, Dickinson & Co., 474 F.3d 1323 (Fed. Cir. 2007), 5-52, 5-62

McCormick-Morgan, Inc. v. Teledyne Indus., Inc., 21 U.S.P.Q.2d 1412 (N.D. Cal. 1991), 4-6

McDaniel v. Anheuser-Busch, Inc., 987 F.2d 298 (5th Cir. 1993), 8-3

McElmurry v. Ark. Power & Light Co., 995 F.2d 1576 (Fed. Cir. 1993), 11-68, 11-69

McLaughlin v. Richland Shoe Co., 486 U.S. 128(1988), 4-18

McZeal v. Sprint Nextel Corp., 501 F.3d 1354 (Fed. Cir. 2007), 4-13

Md. Cas. Co. v. Pac. Coal & Oil Co., 312 U.S. 270 (1941), 2-17

MedImmune, Inc. v. Centocor, Inc., 271 F. Supp. 2d 762, 772 (D. Md. 2003), 2-9

MedImmune, Inc. v. Genentech, Inc., 549 U.S. 118 (2007), 2-17, 2-18, 2-19, 7-33

Medpointe Healthcare, Inc. v. Hi-Tech Pharmacal Co., Inc., 2007 U.S. Dist. LEXIS 4652 (D. N.J. Jan. 22, 2007), 4-17

Meese v. Eaton Mfg. Co., 35 F.R.D. 162 (N.D. Ohio 1964), 2-20

MEMC Elec. Materials v. Mitsubishi Materials Silicon Corp., 420 F.3d 1369 (Fed. Cir. 2005), 6-21

Mentor Corp. v. Coloplast, Inc., 998 F.2d 992 (Fed. Cir. 1993), 11-25

Mentor Graphics Corp. v. Quickturn Design Sys., Inc., 150 F.3d 1374 (Fed. Cir. 1998), 2-18, 11-77

Mentor H/S, Inc. v. Med. Device Alliance, Inc., 240 F.3d 1016 (Fed. Cir. 2001), 2-13

MercExchange, L.L.C. v. eBay, Inc., 500 F. Supp. 2d 556 (E.D. Va. 2007), 2-27

Merck KgaA v. Integra Lifesciences I, Ltd., 545 U.S. 193 (2005), 11-69

Metro-Goldwyn-Mayer Studios Inc. v. Grokster, Ltd., 545 U.S. 913 (2005), 7-12

Micro Motion, Inc. v. Kane Steel Co., 894 F.2d 1318 (Fed. Cir. 1990), 8-32

Micron Tech., Inc. v. Mosaid Techs., Inc., 518 F.3d 897 (Fed. Cir. 2008), 2-17

Microsoft Corp. v. AT&T Corp., 127 S. Ct. 1746 (2007), 11-66

Microsoft Corp. v. Multi-Tech. Sys., Inc., 357 F.3d 1340 (Fed. Cir. 2004, 5-56

Midwest Indus., Inc. v. Karavan Trailers, Inc., 175 F.3d 1356 (Fed. Cir. 1999), 2-25, 4-2, 11-86

Migra v. Warren City Sch. Dist. Bd. of Educ., 465 U.S. 75 (1984), 5-77

Miken Composites, L.L.C. v. Wilson Sporting Goods Co., 515 F.3d 1331 (Fed. Cir. 2008), 5-86

Mikohn Gaming Corp. v. Acres Gaming, Inc., 165 F.3d 891 (Fed. Cir. 1998), 3-4, 3-7

Minco Inc. v. Combustion Eng'g, 95 F.3d 1109, 1117 (Fed. Cir. 1996), 2-15

Minton v. National Ass'n of Sec. Dealers, Inc., 336 F.3d 1373 (Fed. Cir. 2003), 9-8

Moba, B.V. v. Diamond Automation, Inc., 325 F.3d 1306 (Fed. Cir. 2003), 7-40

Modine Mfg. Co. v. Allen Group, Inc., 917 F.2d 538 (Fed. Cir. 1990), 9-7, 9-8

Modine Mfg. Co. v. USITC, 75 F.3d 1545 (Fed. Cir. 1996), 5-44

Moleculon Research Corp. v. CBS, Inc., 793 F.2d 1261 (Fed. Cir. 1986), 7-38, 8-30

Monolith Portland Midwest Co. v. Kaiser Aluminum & Chem. Corp., 407 F.2d 288 (9th Cir. 1969), 9-8

Monolithic Power Sys., Inc. v. 02 Micro Int'l Ltd., 2009 WL 539910 (Fed. Cir. 2009), 8-23

Monsanto Co. v. McFarling, 363 F.3d 1336 (Fed. Cir. 2004), 11-68, 11-72

Monsanto Co. v. Mycogen Plant Sci., Inc., 61 F. Supp. 2d 133 (D. Del. 1999), 11-66

Morvant v. Constr. Aggregates Corp., 570 F.2d 626 (6th Cir. 1978), 8-16

Motorola v. Interdigital Tech. Corp., 930 F. Supp. 952 (D. Del. 1990), 8-10

Motorola, Inc. v. Interdigital Tech. Corp., 1994 U.S. Dist. LEXIS 20714 (D. Del. 1994), 4-21

Moxness Prods., Inc. v. Xomed Inc., 7 U.S.P.Q.2d 1877 (N.D. Fla. 1988, 9-8

Moylan v. Meadow Club, Inc., 979 F.2d 1246 (7th Cir. 1992), 8-15

Mullally v. Jones, 2007 U.S. Dist. LEXIS 30283 (D. Nev. Apr. 20, 2007), 4-17

Multiform Desiccants, Inc. v. Medzam, Ltd., 133 F.3d 1473 (Fed. Cir. 1998), 5-45

Muniauction, Inc. v. Thomson Corp., 532 F.3d 1318 (Fed. Cir. 2008), 6-22, 11-58

Mylan Pharms., Inc. v. Thompson, 268 F.3d 1323 (Fed. Cir. 2001), 3-7

MyMail, Ltd. v. Am. Online, Inc., 476 F.3d 1372 (Fed. Cir. 2007), 2-7

N. Am. Container, Inc. v. Plastipak Packaging, Inc., 415 F.3d 1335 (Fed. Cir. 2005), 5-53

N. Am. Philips Corp. v. Lockheed Sanders, Inc., 35 F.3d 1576 (Fed. Cir. 1994), 6-21

Nat'l Recovery Techs., Inc. v. Magnetic Separation Sys., Inc., 166 F.3d 1190 (Fed. Cir. 1999), 11-34

National Presto Indus. Inc. v. W. Bend Co., 76 F.3d 1185 (Fed. Cir. 1996), 9-6, 9-7, 3-28

Navellier v. Sletten, 262 F.3d 923 (9th Cir. 2001), 8-12

Nazomi Commc'ns, Inc. v. Arm Holdings, PLC, 403 F.3d 1364 (Fed. Cir. 2005), 5-69

Netword, LLC v. Centraal Corp., 242 F.3d 1347 (Fed. Cir. 2001), 5-51, 5-57

Network Commerce, Inc. v. Microsoft Corp., 422 F.3d 1353 (Fed. Cir. 2005), 5-37

New Hampshire v. Maine, 532 U.S. 742 (2001), 5-78, 5-84

Nichols v. Scott, 69 F.3d 1255, 1272 n.33 (5th Cir. 1995), 5-85

Nikken USA, Inc. v. Robinson-May, Inc., 1999 U.S. App. LEXIS 31925 (Fed. Cir. Oct. 25, 1999), 3-28 n.5

Nobelpharma AB v. Implant Innovations, Inc., 141 F.3d 1059 (Fed. Cir. 1998), 2-25, 11-76

Northlake Mktg. & Supply, Inc. v. Glaverbel, S.A., 72 F. Supp. 2d 893 (N.D. Ill. 1999), 8-32

Norwood v. Kirkpatrick, 349 U.S. 29 (1955)

Nova Measuring Instruments Ltd. v. Nanometrics, Inc., 417 F. Supp. 2d 1121 (N.D. Cal. 2006), 4-13

Nova Measuring Instruments Ltd. v. Nanometrics, Inc., 417 F. Supp. 2d 1121 (N.D. Cal. 2006), 2-9

Novartis v. Teva, Nos. 04-4473, 06-1130, 2007 U.S. Dist. LEXIS 42163 (D.N.J. June 11, 2007), 3-11

Novo Indus., L.P. v. Micro Molds Corp., 350 F.3d 1348 (Fed. Cir. 2003), 5-73, 5-74

Novo Nordisk A/S v. Sanofi-Aventis U.S. LLC, 2008 U.S. App. LEXIS 16227 (Fed. Cir. July 30, 2008), 3-25

Novo Nordisk A/S v. Sanofi-Aventis U.S. LLC, 2008 U.S. Dist. LEXIS 12342 (D.N.J. Feb. 19, 2008), 3-12, 3-25

Novozymes A/S v. Genencor Int'l, Inc., 446 F. Supp. 2d 297 (D. Del. 2006), 11-74

NTP, Inc. v. Research in Motion, Ltd., 418 F.3d 1282 (Fed. Cir. 2005), 8-18, 11-67

Nutrition 21 v. United States, 930 F.2d 867 (Fed. Cir. 1991), 3-5

Nystrom v. TREX Co., Inc., 339 F.3d 1347 (Fed. Cir. 2003), 5-26, 11-87

Nystrom v. TREX Co., Inc., 424 F.3d 1136 (Fed. Cir. 2005), 5-32, 5-58

O'Reilly v. Morse, 15 How. 62, 14 L. Ed. 601 (1854), 11-27

O2 Micro Int'l Ltd. v. Beyond Innovation Tech. Co., Ltd., 521 F.3d 1351 (Fed. Cir. 2008), 5-9, 5-42, 5-45

O2 Micro Int'l Ltd. v. Monolithic Power Sys., 467 F.3d 1355 (Fed. Cir. 2006), 2-8, 2-9, 2-10, 2-21, 4-13, 6-15

O2 Micro Int'l v. Beyond Innovation Tech. Co., 2007 U.S. Dist. LEXIS 25948 (E.D. Tex. Mar. 21, 2007), 9-3

Oakley, Inc. v. Int'l Tropic-Cal, Inc., 923 F.2d 167 (Fed. Cir. 1991), 3-5

Oakley, Inc. v. Sunglass Hut Int'l, 2001 U.S. Dist. LEXIS 23572 (C.D. Cal. Dec. 7, 2001), 3-26

Oakley, Inc. v. Sunglass Hut Int'l, 316 F.3d 1331 (Fed. Cir. 2003), 3-26, 3-28

Oatey Co. v. IPS Corp. 514 F.3d 1271 (Fed. Cir. 2008), 5-53

OddzOn Prods, Inc. v. Just Toys, Inc., 122 F.3d 1396 (Fed. Cir. 1997), 11-43

OddzOn Prods, Inc. v. Just Toys, Inc., 122 F.3d 1396 (Fed. Cir. 1997), 11-43, 11-45, 11-46, 11-49

On Demand Machine Corp. v. Ingram Industries., Inc., 442 F.3d 1331 (Fed. Cir. 2006), 5-62, 11-57

On-Line Techs., Inc. v. Bodenseewerk Perkin-Elmer GmbH, 386 F.3d 1133 (Fed. Cir. 2004), 5-52

Ormco Corp. v. Align Tech., Inc., 463 F.3d 1299 (Fed. Cir. 2006), 5-53, 7-9

Ormco Corp. v. Align Tech., Inc., 498 F.3d 1307 (Fed Cir 2007), 9-12

Ortho-McNeil Pharm., Inc. v. Caraco Pharm., 476 F.3d 1321 (Fed. Cir. 2007), 5-19, 5-35, 5-36, 5-41, 5-44

Outlast Techs., Inc. v. Frisby Techs., Inc., 298 F. Supp. 2d 1112 (D. Colo. 2004), 2-26

P.A.T., Co. v. Ultrak, Inc., 948 F. Supp. 1518 (D. Kan. 1996), 5-79

P.N.A. Constr. Techs. v. McTech Group, Inc., 414 F. Supp. 2d 1228 (N.D. Ga. 2006), 3-11

Paice LLC v. Toyota Motor Corp., 504 F.3d 1293 (Fed. Cir. 2007), 9-4

Paice LLC v. Toyota Motor Corp., No. 2:04-CV-211-DF, 2006 U.S. Dist. LEXIS 61600 (E.D. Tex. Aug. 16, 2006), 3-12

Pall Corp. v. Hemasure Inc., 181 F.3d 1305 (Fed. Cir. 1999), 5-20

Pall Corp. v. Micron Separations, Inc., 66 F.3d 1211 (Fed. Cir. 1995), 7-13

Palumbo v. Don-Joy Co., 762 F.2d 969 (Fed. Cir. 1985), 5-72

Pandrol USA, LP v. Airboss Ry. Prods., Inc., 424 F.3d 1161 (Fed. Cir. 2005), 2-18

Panduit Corp. v. Hellermanntyton Corp., 451 F.3d 819 (Fed. Cir. 2006), 11-61

Panduit Corp. v. Stahlin Bros. Fibre Works, Inc., 575 F.2d 1152 (6th Cir. 1978), 7-13, 11-79, 11-80

Paragon Podiatry Lab., Inc. v. KLM Labs., Inc., 984 F.2d 1182 (Fed. Cir. 1993), 8-5

Parke-Davis & Co. v. H.K. Mulford & Co., 189 F. 95 (S.D.N.Y. 1911), 11-28

Parker v. Flook, 437 U.S. 584 (1978), 11-28

Patlex Corp. v. Mossinghoff, 758 F.2d 594 (Fed. Cir. 1985), 2-27, 2-28

Paulik v. Rizkalla, 760 F.2d 1270 (Fed. Cir. 1985), 11-30, 11-42

Peeler v. Miller, 535 F.2d 647 (CCPA 1976), 11-42

Pellegrini v. Analog Devices, Inc., 275 F.3d 1113 (Fed. Cir. 2004), 11-66

Pergo, Inc. v. Faus Group, Inc., 401 F. Supp. 2d 515 (E.D.N.C. 2005), 3-16

PerSeptive BioSystems, Inc. v. Pharmacia Biotech, Inc., 12 F. Supp. 2d 69 (D. Mass. 1998), 8-27

Personalized Media Commc'ns, LLC v. Int'l Trade Comm'n, 161 F.3d 696 (Fed. Cir. 1998), 11-36

Pfaff v. Wells Elecs., 525 U.S. 55 (1998), 11-44

Pfizer, Inc. v. Ranbaxy Labs., Ltd., 457 F.3d 1284 (Fed. Cir. 2006), 5-33

Pfizer, Inc. v. Teva Pharmaceuticals, USA, Inc., 429 F.3d 1364 (Fed. Cir. 2005), 3-12, 5-83

Pharmacia & Upjohn Co. v. Mylan Pharm., Inc., 170 F.3d 1373 (Fed. Cir. 1999) 5-77

PharmaStem Therapeutics, Inc. v. ViaCell, Inc., 491 F.3d 1342 (Fed. Cir. 2007), 6-8, 6-14, 7-9, 11-53

Phillips v. AWH Corp., 415 F.3d 1303 (Fed. Cir. 2005), 5-18 n.1, 5-19, 5-27, 5-31– 5-34, 5-45, 5-46, 5-48–5-57, 5-69, 5-70, 5-88, 11-14, 11-59

Phonometrics, Inc. v. Hospitality Franchise Sys., Inc., 203 F.3d 790 (Fed. Cir. 2000), 2-8

Phonometrics, Inc. v. Northern Telecom Inc., 133 F.3d 1459 (Fed. Cir. 1998), 5-83

Planet Bingo v. Gametech Int'l, 472 F.3d 1338 (Fed. Cir. 2006), 6-3

Plant Genetic Sys., N.V. v. DeKalb Genetics Corp., 315 F.3d 1335 (Fed. Cir. 2003), 11-34

Playtex Prods., Inc. v. Procter & Gamble Co., 400 F.3d 901 (Fed. Cir. 2005), 5-43

Plymouth Indus., LLC v. Sioux Steel Co., 2006 U.S. Dist. LEXIS 14706 (D. Neb. Mar. 17, 2006), 4-20

Polaroid Corp. v. Eastman Kodak Co., 641 F. Supp. 828 (D. Mass 1985, 9-8

Polymer Techs. v. Bridwell, 103 F.3d 970 (Fed. Cir. 1996), 3-5, 3-7, 3-8

Power Integrations, Inc. v. BCD Semiconductor Corp., 2008 U.S. Dist. LEXIS 16021 (D. Del. Feb. 11, 2008), 3-20

Power-One, Inc. v. Artesyn Techs., Inc., 2008 U.S. Dist. LEXIS 30338 (E.D. Tex. Apr. 11, 2008), 3-27

PPG Indus. v. Guardian Indus. Corp., 156 F.3d 1351 (Fed. Cir. 1998), 5-21 n.3, 5-43

Praxair, Inc. v. ATMI, Inc., 479 F. Supp. 2d 440 (D. Del. 2007), 9-3

Pretty Punch Shoppettes, Inc. v. Hauk, 844 F.2d 782 (Fed. Cir. 1988), 3-4–3-5

Prima Tek II, L.L.C. v. A-Roo Co., 222 F.3d 1372 (Fed. Cir. 2000), 2-13

Prof. Real Estate Investors, Inc. v. Columbia Pictures, Inc., 508 U.S. 49 (1993), 4-18

Propat Int'l Corp. v. Rpost, Inc., 473 F.3d 1187 (Fed. Cir. 2007), 2-13, 2-14, 2-16

PSC Computer Prods., Inc. v. Foxconn Int'l, Inc., 355 F.3d 1353 (Fed. Cir. 2004), 11-64

Pughsley v. 3750 Lake Shore Drive Coop. Bldg., 463 F.2d 1055 (7th Cir. 1972), 3-24

Purdue Pharma L.P. v. Boehringer Ingelheim GmbH, 237 F.3d 1359 (Fed. Cir. 2001), 3-9, 3-15

Purdue Pharma L.P. v. Endo Pharms. Inc., 410 F.3d 690 (Fed. Cir. 2005), 11-71, 11-72

Purdue Pharma L.P. v. Endo Pharms. Inc., 438 F.3d 1123 (Fed. Cir. 2006), 5-58, 5-89

Purer & Co. v. Aktiebolaget Addo, 410 F.2d 871 (9th Cir. 1969), 9-7

Q-Pharma, Inc. v. Andrew Jergens Co., 360 F.3d 1295 (Fed. Cir. 2004), 2-29

Quackenbush v. Allstate Ins. Co., 517 U.S. 706 (1996), 2-31

Quanta Computer, Inc. v. LG Electronics, Inc., 128 S. Ct. 2109 (2008), 5-59, 11-68

Quantum Corp. v. Rodime, PLC, 65 F.3d 1577 (Fed. Cir. 1995), 11-23, 11-25

Quantum Corp. v. Tandon Corp., 940 F.2d 642 (Fed. Cir. 1991), 4-20

Quickie Mfg. Corp. v. Libman Co., 180 F. Supp. 2d 636 (D.N.J. 2002), 3-8

Rasmusson v. Smithkline Beecham Corp., 413 F.3d 1318 (Fed. Cir. 2005), 11-35

Rates Tech., Inc. v. Cablevision Sys. Corp., 2006 U.S. Dist. LEXIS 19668 (E.D.N.Y. Apr. 14, 2006), 4-21

Raytheon Co. v. Roper Corp., 724 F.2d 951 (Fed. Cir. 1983), 5-71, 11-59

Razor USA LLC v. ASA Prods., Inc., 2000 U.S. App. LEXIS 33182 (Fed. Cir. Nov. 22, 2000), 3-29

Read Corp. v. Portec, Inc., 970 F.2d 816 (Fed. Cir. 1992), 9-6, 11-83

Red Wing Shoe Co. v. Hockerson-Halberstadt, Inc., 148 F.3d 1355 (Fed. Cir. 1998), 10-6

Reebok Int'l Ltd. v. J. Baker, Inc., 32 F.3d 1552 (Fed. Cir. 1994), 3-5, 3-11

Refac Int'l Ltd. v. Hitachi Ltd., 141 F.R.D. 281 (C.D. Cal. 1991), 2-29

Refac Int'l, Ltd. v. IBM, 790 F.2d 79 (Fed. Cir. 1986), 2-20

Regents of the Univ. of Cal. v. Dako N. Am., Inc., 477 F.3d 1355 (Fed. Cir. 2007), 11-87

Regents of the Univ. of Cal. v. Eli Lilly & Co., 119 F.3d 1559 (Fed. Cir. 1997), 11-33

Regents of the Univ. of Cal. v. Monsanto Corp., 2005 U.S. Dist. LEXIS 40379 (N.D. Cal. 2005), 11-74.

Regents of the Univ. of Cal. v. Oncor Inc., 44 U.S.P.Q.2d 1321 (N.D. Cal. 1997), 8-23

Regents of the University of Cal. v. Dakocytomation Cal., Inc., 517 F.3d 1363 (Fed. Cir. 2008), 5-25, 5-26, 5-61

Reiffin v. Microsoft Corp., 270 F. Supp. 2d 1132 (N.D. Cal. 2003), 11-74

Reilly v. United States, 863 F.2d 149 (1st Cir. 1988), 8-24

Renishaw PLC v. Marposs Societa' per Azioni, 158 F.3d 1243 (Fed. Cir. 1998), 5-43

ResQNet.com, Inc. v. Lansa, Inc., 346 F.3d 1374 (Fed. Cir. 2003), 5-33

Rexnord Corp. v. Laitrop Corp., 274 F.3d 1336 (Fed. Cir. 2001), 5-55

RF Del., Inc. v. Pac. Keystone Tech., Inc., 326 F.3d 1255 (Fed. Cir. 2003), 5-78, 5-84, 5-85 n.8, 5-59, 5-82

Rhine v. Casio, Inc., 183 F.3d 1342 (Fed. Cir. 1999), 5-69

Rhino Assoc., L.P. v. Berg Mfg. and Sales Corp., Civil Action No. 1:04-CV-1611, Order Granting Temporary Restraining Order (Docket No. 44) (July 1, 2005 M.D. Penn.), 3-18

Richardson-Vicks Inc. v. Upjohn Co., 122 F.3d 1476 (Fed. Cir. 1997), 7-8

Riles v. Shell Exploration & Prod. Co., 298 F.3d 1302 (Fed. Cir. 2002), 7-15, 9-6

Rite-Hite Corp. v. Kelley Co., 56 F.3d 1538 (Fed. Cir. 1995), 3-15, 7-13, 7-24, 11-79, 11-80

Robotic Vision Sys. v. View Eng'g, 1996 U.S. Dist. LEXIS 11917 (C.D. Cal. Mar. 1, 1996), 3-18, 3-19

Roche Palo Alto LLC v. Apotex, Inc., 531 F.3d 1372 (Fed. Cir. 2008), 11-66

Roche Prods. Inc. v. Bolar Pharm. Co., 733 F.2d 858 (Fed. Cir. 1984), 11-69

Roland Mach. Co. v. Dresser Indus., Inc., 749 F.2d 380 (7th Cir. 1984), 3-29

Rowe Int'l Corp. v. Ecast, Inc., 241 F.R.D. 296 (N.D. Ill. 2007), 4-19

Ryan Operations G.P. v. Santiam-Midwest Lumber Co., 81 F.3d 355 (3d Cir. 1996), 5-85

S.C. Johnson & Sons v. Carter-Wallace, Inc., 781 F.2d 198 (Fed. Cir. 1986), 9-8

Safeco Ins. Co. of Am. v. Burr, 551 U.S. 47 (2007), 4-18

Sage Prods. Inc. v. Devon Indus., Inc., 126 F.3d 1420 (Fed. Cir. 1997), 11-64

SanDisk Corp. v. Memorex Prods., Inc., 415 F.3d 1278 (Fed. Cir. 2005), 5-59

SanDisk Corp. v. STMicroelectronics, Inc., 480 F.3d 1372 (Fed. Cir. 2007), 2-17

Sanitary Refrigerator Co. v. Winters, 280 U.S. 30 (1929), 11-60

Sanofi-Synthelabo v. Apotex, Inc., 470 F.3d 1368 (Fed. Cir. 2006), 3-8, 3-10, 3-14, 3-25, 3-28

Schering Corp. v. Amgen, Inc., 35 F. Supp. 2d 375 (D. Del. 1999, 5-83

Schering-Plough Corp. v. FTC, 402 F.3d 1056 (11th Cir. 2005), 2-47, 10-10

Schoenhaus v. Genesco, Inc., 440 F.3d 1354 (Fed. Cir. 2006), 6-4

Schroeder v. Tracor, Inc., No. 99-1281, 1999 U.S. App. LEXIS 30386, at *4-5 (Fed. Cir. Nov. 5, 1999), 11-69

SciMed Life Sys., Inc. v. Advanced Cardiovascular Sys., Inc., 242 F.3d 1337 (Fed. Cir. 2001), 5-53, 11-63

Scripps Clinic & Research Found. v. Genentech, Inc., 927 F.2d 1565 (Fed. Cir. 1991), 6-5, 7-40, 11-65

Seachange Int'l, Inc. v. C-COR, Inc., 413 F.3d 1361 (Fed. Cir. 2005), 5-61

SEB S.A. v. Montgomery Ward & Co., 137 F. Supp. 2d 285 (S.D.N.Y. 2001), 3-27

Security People, Inc. v. Medeco Security Locks, Inc., 59 F. Supp. 2d 1040 (N.D. Cal. 1999), 5-81

Seiko Epson Corp. v. Nu-Kote Int'l, Inc., 190 F.3d 1360 (Fed. Cir. 1999), 2-26

Semitool, Inc. v. Tokyo Elec. Am., 208 F.R.D. 273 (N.D. Cal. 2002), 3-20

Senior Techs., Inc. v. R.F. Techs. Inc., 76 F. App'x 318 (Fed. Cir. 2003), 11-63

Serio-US Indus., Inc. v. Plastic Recovery Techs. Corp., 459 F.3d 1311 (Fed. Cir. 2006), 8-18

Serio-US Indus., Inc. v. Plastic Recovery Techs. Corp., 459 F.3d 1311 (Fed. Cir. 2006), 8-18, 9-8

Seymore v. McCormick, 57 U.S. 480 (1853), 7-16, 11-82

Shamrock Techs., Inc. v. Med.Sterilization, Inc., 903 F.2d 789 (Fed. Cir. 1990), 2-18, 2-19

Shum v. Intel, 499 F.3d 1272 (Fed. Cir. 2007), 8-5

Silent Drive, Inc. v. Strong Indus., Inc., 326 F.3d 1194 (Fed. Cir. 2003), 2-29

Sinclair Ref. Co. v. Jenkins Petroleum Co., 289 U.S. 689 (1933), 7-27

Smith & Nephew, Inc. v. Synthes (U.S.A.), 466 F. Supp. 2d 978 (W.D. Tenn. 2006), 9-2

Smith Int'l v. Hughes Tool Co., 718 F.2d 1573 (Fed. Cir. 1983), 3-3, 3-6, 3-9, 9-2, 11-77

Smith v. Wade, 461 U.S. 30 (1983), 4-18

Société Nationale Industrielle Aerospatiale v. United States Dist. Ct., 482 U.S. 522 (1987), 4-10

Sofamor Danek Group, Inc. v. DePuy-Motech, Inc., 74 F.3d 1216 (Fed. Cir. 1996), 2-8

Solaia Tech. LLC v. Jefferson Smurfit Corp., 2002 U.S. Dist. LEXIS 15666 (N.D. Ill. Aug. 20, 2002), 4-6

Solomon v. Kimberly-Clark Co., 216 F.3d 1372 (Fed. Cir. 2000), 11-36

Soverain Software LLC v. Amazon.com, Inc., 383 F. Supp. 2d 904 (E.D. Tex. 2005), 11-83

Spectra-Physics Lasers, Inc. v. Uniphase Corp., 144 F.R.D. 99 (N.D. Cal. 1992), 8-3

Spectra-Physics, Inc. v. Coherent, Inc., 827 F.3d 1524 (Fed. Cir. 1987), 7-33

Spindelfabrik Suessen-Schurr v. Schubert & Salzer Maschinenfabrik Aktiengesellschaft, 903 F.2d 1568 (Fed. Cir. 1990), 3-27

SRAM Corp. v. AD-II Eng'g, Inc., 465 F.3d 1351 (Fed. Cir. 2006), 5-60

SRI Int'l v. Advanced Tech. Labs., Inc., 127 F.3d 1462 (Fed. Cir. 1997), 9-6

SRI Int'l v. Matsushita Elec. Corp. of Am., 775 F.2d 1107(Fed. Cir. 1985, 2-5, 5-20, 11-66

Standard Haven Prods., Inc. v. Gencor Indus., 897 F.2d 511 (Fed. Cir. 1990), 3-29, 9-10

Standard Havens Prods., Inc. v. Gencor Indus., Inc., 953 F.2d 1360 (Fed. Cir. 1991), 8-33

Star Scientific, Inc. v. R.J. Reynolds Tobacco Co., 537 F.3d 1357 (Fed. Cir. 2008), 5-75, 6-24

Stark v. Advanced Magnetics, Inc., 119 F.3d 1551 (Fed. Cir. 1997), 11-55

State Indus., Inc. v. Mor-Flo Indus., Inc., 883 F.2d 1573 (Fed. Cir. 1989), 7-13

State Street Bank & Trust Co. v. Signature Fin. Group, Inc., 149 F.3d 1368 (Fed. Cir. 1998), 11-29, 11-30

Stevenson v. Sears, Roebuck & Co., 713 F.2d 705 (Fed. Cir. 1983), 5-81

Structural Rubber Prods. Co. v. Park Rubber, 749 F.2d 707 (Fed. Cir. 1984), 7-5, 8-34

Sulzer Textil A.G. v. Picanol N.V., 358 F.3d 1356 (Fed. Cir. 2004), 2-10

Sun Microsystems v. Dataram Corp., 1997 U.S. Dist. LEXIS 4557 (N.D. Cal. 1997), 2-24

Sundance, Inc. v. DeMonte Fabricating Ltd., 2007 U.S. Dist. LEXIS 158 (E.D. Mich. Jan. 4, 2007), 9-3

Sw. Software, Inc. v. Harlequin, Inc., 226 F.3d 1280 (Fed. Cir. 2000), 8-34, 11-18

Symbol Techs., Inc. v. Lemelson Med., Educ. & Research Found., L.P., 277 F.3d 1361 (Fed. Cir. 2002), 11-74

Symbol Techs., Inc. v. Lemelson Med., Educ. & Research Found., L.P., 422 F.3d 1378 (Fed. Cir. 2005), 11-74

Symbol Techs., Inc. v. Metrologic Instruments, Inc., 450 F. Supp. 2d 676 (E.D. Tex. 2006), 2-32

Syntex Pharms. Int'l, Ltd. v. K-Line Pharms., Ltd., 905 F.2d 1525 (Fed. Cir. 1990), 5-81

T.J. Smith & Nephew Ltd. v. Consol. Med. Equip., Inc., 821 F.2d 646 (Fed. Cir. 1987), 3-5

Tanabe Seiyaku Co., Ltd. v. U.S. Int'l Trade Comm'n, 109 F.3d 726 (Fed. Cir. 1997), 5-33

Tank Insulation Int'l, Inc. v. Insultherm, Inc., 104 F.3d 83 (5th Cir. 1997), 2-25

Tap Pharm. Prods. v. Atrix Labs., Inc., 2004 U.S. Dist. LEXIS 17118 (N.D. Ill. Aug. 26, 2004), 3-17

Tap Pharm. Prods., Inc. v. Owl Pharms., L.L.C., 419 F.3d 1346 (Fed. Cir. 2005), 5-35

Tate Access Floors, Inc. v. Interface Architectural Res., Inc., 185 F. Supp. 2d 588 (D. Md. 2002), 5-85

Tate Access Floors, Inc. v. Interface Architectural Resources, Inc., 279 F.3d 1357 (Fed. Cir. 2002), 11-66

Tate Access Floors, Inc. v. Maxcess Techs., Inc., 222 F.3d 958 (Fed. Cir. 2000), 9-6

TechSearch LLC v. Intel Corp., 286 F.3d 1360 (Fed. Cir. 2002), 5-13, 5-15, 8-24

Teledyne Indus., Inc. v. NLRB, 911 F.2d 1214 (6th Cir. 1990), 5-85

Teleflex Inc. v. KSR Int'l, 298 F. Supp. 2d 581 (E.D. Mich. 2003), 11-47, 11-50

Teleflex, Inc. v. Ficosa N. Am. Corp., 299 F.3d 1313 (Fed. Cir. 2002)., 11-35

Telemac Cellular Corp. v. Topp Telecom, Inc., 247 F.3d 1316 (Fed. Cir. 2001), 6-13, 6-14

Telemac Corp. v. Teledigital, Inc., 450 F. Supp. 2d 1107 (N.D. Cal. 2006), 4-15

Teradyne, Inc. v. Hewlett-Packard, Co., No. C-91-0344 MHP, 1993 U.S. Dist. LEXIS 14601 (N.D. Cal. Jan. 7, 1993), 2-27

Teva Pharms. USA, Inc. v. Novartis Pharms. Corp., 482 F.3d 1330 (Fed. Cir. 2007), 10-5

Tex. Digital Sys., Inc. v. Telegenix, Inc., 308 F.3d 1193 (Fed. Cir. 2002), 5-30, 5-50

Tex. Instruments v. Cypress Semiconductor Corp., 90 F.3d 1558 (Fed. Cir. 1996), 2-27, 11-88

Tex. Instruments, Inc. v. Linear Techs. Corp., 182 F. Supp. 2d 580 (E.D. Tex. 2002), 5-77, 5-86 n.7, 5-87

Texas Instruments, Inc. v. Tessera, Inc., 231 F.3d 1325 (Fed. Cir. 2000), 3-4, 3-28

Texas Instruments, Inc. v. U.S. Int'l Trade Comm'n, 988 F.2d 1165 (Fed. Cir. 1993), 11-51

Textile Prods., Inc. v. Mead Corp., 134 F.3d 1481 (Fed. Cir. 1998), 2-13, 2-30

Tiber Labs., LLC v. Hawthorn Pharms., Inc., 527 F. Supp. 2d 1373 (N.D. Ga. 2007), 3-10

Tillman v. Association of Apartment Owners of Ewa Apartments, 234 F.3d 1087 (9th Cir. 2000), 9-8

Titanium Metals Corp. v. Banner, 778 F.2d 775 (Fed. Cir. 1985), 11-37

TiVo v. EchoStar Commc'ns Corp., 446 F. Supp. 2d. 664 (E.D. Tex. 2006), 9-2

Tivo, Inc. v. Echostar Communications Corporation, 516 F.3d 1290 (Fed. Cir. 2008), 5-63

TM Patents, L.P. v. IBM Corp., 72 F. Supp. 2d 370 (S.D.N.Y. 1999), 5-80, 5-81, 5-84

Tormenia v. First Investors Realty Co., Inc., 251 F.3d 128 (3d Cir. 2000), 7-22

Toro Co. v. White Consol. Indus., Inc., 383 F.3d 1326 (Fed. Cir. 2004), 9-12, 11-64

Townsend v. Smith, 36 F.2d 292 (CCPA 1929), 11-40
Trading Technologies Intl., Inc. v. eSpeed, Inc., 2008 U.S. Dist. LEXIS 295 (N.D. Ill.), 2-22
Transclean Corp. v. Bridgewood Servs., Inc., 290 F.3d 1364 (Fed. Cir. 2002), 11-84
Transco v. Performance Contracting, Inc., 38 F.3d 551 (Fed. Cir. 1994), 11-36
Transonic Sys. v. Non-Invasive Med. Techs. Corp., 75 F. Appx. 765, 774 (Fed. Cir. 2003), 5-81
TWM Mfg. Co. v. Dura Corp., 213 U.S.P.Q. 423 (E.D. Mich. 1981), 9-8
TWM Mfg. Co. v. Dura Corp., 592 F.2d 346 (6th Cir. 1979), 11-74
TWM Mfg. Co. v. Dura Corp., 789 F.2d 895 (Fed. Cir. 1986), 7-14
U.S. Credit Sys. Co. v. Am. Credit Indem. Co., 59 F. 139 (2d Cir. 1893), 11-30
U.S. Leather, Inc. v. H&W P'ship, 60 F.3d 222 (5th Cir. 1995), 9-12
U.S. Steel Corp. v. United States, 730 F.2d 1465 (Fed. Cir. 1984), 4-21
U.S. Surgical Corp. v. Ethicon, Inc., 103 F.3d 1554 (Fed. Cir. 1997), 5-23
Underwater Devices Inc. v. Morrison-Knudsen Co., 717 F.2d 1380 (Fed. Cir. 1983), 7-11, 11-84
Union Carbide Chems. & Plastics Tech. Corp. v. Shell Oil Co., 308 F.3d 1167 (Fed. Cir. 2002), 8-34
Union Oil Co. of Cal. v. Atl. Richfield Co., 208 F.3d 989 (Fed. Cir. 2000), 7-7
Unisplay S.A. v. Am. Elec. Sign Co., Inc., 69 F.3d 512 (Fed. Cir. 1995), 7-26, 7-27
United States ex. rel. Bagley v. TRW, Inc., 204 F.R.D. 170, 177 (C.D. Cal. 2001), 4-8
United States v. Adams, 383 U.S. 39 (1966), 11-51
United States v. Ajmal, 67 F.3d 12 (2d Cir. 1995), 8-21
United States v. Armour & Co., 402 U.S. 673 (1971), 5-83
United States v. Balsam, 203 F.3d 72 (1st Cir. 2000), 8-21
United States v. Brodie, 858 F.2d 492 (9th Cir. 1988), 7-21
United States v. Huebner, 48 F.3d 376 (9th Cir. 1994), 8-21
United States v. Kellington, 217 F.3d 1084 (9th Cir. 2000), 9-11
United States v. Klee, 494 F.2d 394 (9th Cir. 1974), 8-19
United States v. Marler, 614 F.2d 47 (5th Cir. 1980), 7-22
United States v. Nobles, 422 U.S. 225 (1975), 2-22
United States v. Rhodes, 631 F.2d 43 (5th Cir. 1980), 8-21
United States v. Richardson, 233 F.3d 1285 (11th Cir. 2000), 8-21
United States v. Rodriguez-Pacheco, 475 F.3d 434 (1st Cir. 2007), 5-78, 5-86
United States v. Sutton, 970 F.2d 1001 (1st Cir. 1992)
United States v. Wilson, 133 F.3d 251 (4th Cir. 1997), 7-21
United States v. Young, 804 F.2d 116 (8th Cir. 1986), 5-79
Unitherm Food Sys. v. Swift-Eckrich, Inc., 375 F.3d 1341 (Fed. Cir. 2004), 11-86
Univ. of Rochester v. G.D. Searle & Co., Inc., 358 F.3d 916 (Fed. Cir. 2004), 6-7
Univ. of Tex. v. Camenisch, 451 U.S. 390 (1981), 3-6, 5-81
Universal Athletic Sales Co. v. Am. Gym, 480 F. Supp. 408 (W.D. Pa. 1979), 9-8

Upjohn Co. v. Syntro Corp., 14 USPQ 2d 1469, 1473 (D. Del. 1990), 2-20

V-Formation, Inc. v. Benneton Group SpA, 401 F.3d 1307 (Fed. Cir. 2005), 5-46

Va. Panel Corp. v. MAC Panel Co., 133 F.3d 860 (Fed. Cir. 1997), 9-7, 11-72

Vas-Cath Inc. v. Mahurkar, 935 F.2d 1555 (Fed. Cir. 1991), 11-33

Vaupel Textilmaschinen KG v. Meccanica Euro Italia SPA, 944 F.2d 870 (Fed. Cir. 1991), 2-13

Ventana Med. Sys., Inc. v. Biogenex Labs., Inc., 473 F.3d 1173 (Fed. Cir. 2006), 5-32, 5-57

Verizon Cal. Inc. v. Ronald A. Katz Tech. Licensing, P.A., 326 F. Supp. 2d 1060 (C.D. Cal. 2003), 5-86

Verve LLC v. Crane Cams, Inc., 311 F.3d 1116 (Fed. Cir. 2002), 11-36

View Eng'g, Inc. v. Robotic Vision Sys., Inc., 208 F.3d 981 (Fed. Cir. 2000), 4-13

Vigil v. Walt Disney Co., 2000 U.S. App. LEXIS 6231 (Fed. Cir. 2000), 2-29

Viskase Corp. v. Am. Nat'l Can Co., 261 F.3d 1316 (Fed. Cir. 2001), 2-28

Vista Mfg. Inc. v. Trac-4 Inc., 131 F.R.D. 134 (N.D. Ind. 1990), 2-29

Visto Corp. v. Seven Networks, Inc., No. 2:03-CV-333-TJW, 2006 U.S. Dist. LEXIS 91453 (E.D. Tex. Dec. 19, 2006), 3-12

Visto Corp. v. Sproqit Techs., Inc., 445 F. Supp. 2d 1104 (N.D. Cal. 2006), 5-84, 5-85

Vitronics Corp. v. Conceptonics, Inc., 90 F.3d 1576 (Fed. Cir. 1996), 5-18, -30, 5-89

Vivid Techs., Inc. v. Am. Sci. & Eng'g, Inc., 200 F.3d 795 (Fed. Cir. 1999), 2-25, 5-10

Voda v. Cordis Corp., 2006 U.S. Dist. LEXIS 63623 (W.D. Okla Sept. 5, 2006), 9-3

Voda v. Cordis Corp., 476 F.3d 887 (Fed. Cir. 2007), 11-89

Voice Techs. Group, Inc. v. VMC Sys., Inc., 164 F.3d 605 (Fed. Cir. 1999), 2-5, 4-10

Voile Mfg. Corp. v. Dandurand, 551 F. Supp. 2d 1301 (D. Utah 2008), 3-10

W.L. Gore & Assocs., Inc. v. Garlock, Inc., 721 F.2d 1540 (Fed. Cir. 1983), 11-38, 11-51

Waid v. Merrill Area Public Schools, 91 F.3d 857 (7th Cir. 1996) 5-77

Wald v. Mudhopper Oilfield Servs., Inc., No. CIV-04-1693-C, 2006 U.S. Dist. LEXIS 51669 (W.D. Okla. 2006), 9-2

Walker Process Equip., Inc. v. Food Machinery & Chemical Corp., 382 U.S. 172 (1965), 2-25, 11-76

Wang Labs., Inc. v. Mitsubishi Elecs. Am., Inc., 103 F.3d 1571 (Fed. Cir. 1997), 11-68

Wang Labs., Inc. v. Oki Elec. Indus. Co., Ltd., 15 F. Supp. 2d 166 (D. Mass. 1998), 5-86

Warner-Jenkinson Co. v. Hilton Davis Chem. Co., 520 U.S. 17 (1997), 11-60, 11-61

Warner-Jenkinson Co., Inc. v. Hilton Davis Chem. Co., 520 U.S. 17 (1997), 6-14

Warner-Lambert Co. v. Teva Pharms. USA, Inc., 418 F.3d 1326 (Fed. Cir. 2006), 6-7

Warrior Sports, Inc. v. STX, L.L.C., 2008 U.S. Dist. LEXIS 21387 (E.D. Mich. Mar. 19, 2008), 3-25

Water Techs. Corp. v. Calto, Ltd., 850 F.2d 660 (Fed. Cir. 1988), 11-56

Watkins v. Nw. Ohio Tractor Pullers Assn., Inc., 630 F.2d 1155 (6th Cir. 1980), 2-20

Westinghouse Elec. & Mfg. Co. v. Wagner Co., 225 U.S. 604 (1912), 7-16, 11-82

White v. Jeffrey Mining Co., 723 F.2d 1553 (Fed. Cir. 1983), 8-31

Williams v. Jader Fuel Co., Inc., 944 F.2d 1388 (7th Cir. 1992), 8-18

Wilson Sporting Goods Co. v. David Geoffrey & Associates, 904 F.2d 677 (Fed. Cir. 1990), 6-20, 9-12, 11-63

Wilson Sporting Goods Co. v. Hillerich & Bradsby Co., 442 F.3d 1322 (Fed. Cir. 2006), 5-20

Wilton v. Seven Falls Co., 515 U.S. 277, 286 (1995), 2-18

Winbond Elecs. Corp. v. ITC, 2001 U.S. App. LEXIS 25113 (Fed. Cir. Aug. 22, 2001), 4-19

Windsurfing Int'l, Inc. v. AMF, Inc., 782 F.2d 995 (Fed. Cir. 1986), 3-6

WMS Gaming, Inc. v. Int'l Game Tech., 184 F.3d 1339 (Fed. Cir. 1999), 5-72, 11-64

Woodland Trust v. Flowertree Nursery, Inc., 148 F.3d 1368 (Fed. Cir. 1998), 11-38

Yarway Corp. v. Eur-Control USA, Inc., 775 F.2d 268 (Fed. Cir. 1985), 9-5

z4 Techs., Inc. v. Microsoft Corp., 434 F. Supp. 2d 437 (E.D. Tex. 2006), 3-10, 3-15

Zenith Radio Corp. v. United States, 783 F.2d 184 (Fed. Cir. 1986), 5-86

Index

ABANDONMENT, 11-41

ABBREVIATED NEW DRUG APPLICATION, Chapter 10

ANSWERS, 2-12

ANTICIPATION, 11-37

ANTITRUST ISSUES
- Bifurcation from patent cause of action, 8-8
- Counterclaims, 11-76
- Reverse payments in ANDA cases, 10-10

APPEALS
- Generally, 11-85
- Remand, 9-10
- Stay of injunction pending, 9-9

APPLICATION, 11-11

ATTORNEY-CLIENT PRIVILEGE
- Claw-back provisions, 4-8
- Opinions of counsel, 2-22
- Waiver of, 4-18

ATTORNEY FEES, 9-7, 11-84

BANKRUPTCY, 2-25

BEST MODE REQUIREMENT,
- Generally, 11-35
- Role in claim construction, 5-51

BIFURCATION
- Discovery, 4-15
- Trial, 8-3

CASE MANAGEMENT
- ANDA cases, 10-6
- Early case management, Chapter 2

CLAIMS
- Construction of, Chapter 5
- Doctrine of equivalents, 11-60
- Drafting of, 5-28
- Indefiniteness in, 5-73
- Means plus function, 5-69
- Mistake in, 5-73
- Prosecution history estoppel, 11-61
- Recapture doctrine, 11-20

CLAIM CONSTRUCTION
- Discovery, 4-10
- Generally, Chapter 5
- Jury deliberations, 8-34
- Jury instruction, 7-7
- Following remand, 9-10
- Motion barring evidence or argument inconsistent with claim construction, 7-40
- Motion to preclude reference to an expert's contrary claim construction opinion, 7-41
- Summary judgment motions, 6-2

COMPENSATORY DAMAGES, 11-79

COMPLAINTS, 2-12

CONCEALMENT, 11-41

CONFIDENTIALITY (See also ATTORNEY-CLIENT PRIVILEGE)
- Access by patent prosecution counsel, 4-20
- Designation of documents, 4-7
- Protective orders, 4-6
- Third party discovery issues, 4-21

CONFIDENTIAL ADVISOR, 8-23

CONTRIBUTORY INFRINGEMENT, 11-57

COUNTERCLAIMS
- Antitrust, 11-76
- Generally, 2-24

COURT-APPOINTED EXPERTS, 8-23

DAMAGES
- Attorneys' fees, 11-84
- Base for calculation, 7-28
- Bifurcation, 8-7
- Compensatory, 11-79
- Costs, 11-84
- Discovery, 4-3
- Enhancement, 9-5, 11-83
- Generally, 7-13, 8-32, 11-78
- *Georgia-Pacific* factors, 7-24, 11-80
- Jury instructions, 7-13
- Lost profits, 11-79
- Marking, effect of, 11-82
- Motion to preclude evidence, 7-39
- Prejudgment interest, 11-84
- Reasonable royalty, 11-80
- Summary judgment, 6-22
- Willful infringement (See WILLFUL INFRINGEMENT)

DAUBERT AND SCIENTIFIC EXPERT TESTIMONY, 7-18

DECLARATORY JUDGMENT ACTION
- Assignor estoppel, 2-18
- Jurisdiction over ANDA cases, 10-4
- Licensee filing declaratory judgment for invalidity, 2-19
- Requirements for defendants, 2-19
- Requirements for plaintiffs, 2-13

DEFENSES
- Antitrust counterclaims, 11-76
- Consent, 11-68
- Double patenting, 11-75
- Equitable estoppel, 11-73
- Exhaustion, 11-68
- Experimental use, 11-69
- First sale doctrine, 11-68
- Inequitable conduct, 11-71
- Invalidity, 11-74

DEFENSES, *continued*
Laches, 11-73
License, 11-68
Medical procedure patents, special case of, 11-70
Misuse, 11-72
Non-infringement, 11-67
Prior use right, 11-70
Prosecution laches, 11-74
Shop right, 11-69
Sovereign immunity, 11-70

DEFINITENESS
Generally, 11-36
Invalidity due to lack of, 5-74
Summary judgment, 6-19

DEMONSTRATIVE EVIDENCE, 8-28

DEPOSITIONS, 4-5

DISCLAIMER OF TERM, 11-18

DISCLOSURE OF INVENTION, 11-32

DISCOVERY
Bifurcation or stay pending early dispositive motion, 4-17
Bifurcation or stay pending re-examination, 4-15
Confidentiality during litigation, 4-6
Contentions about infringement, invalidity, and unenforceability, 4-14
Cost management, 4-3
Claim construction, 4-10
Disclosure, 4-3
Electronic, 4-11
Disputes, 4-12
Foreign issues, 4-9
Interrogatories, 4-4
License agreements and other third-party confidential information, 4-21
Motion to compel, 4-4
Patent prosecution counsel, 4-19
Plans, 4-2
Pre-filing investigation, 4-13
Preliminary injunctions, 3-20
Production of documents, 4-3
Products, 4-13

DOCTRINE OF EQUIVALENTS
Generally, 11-60
Motion to preclude evidence concerning, 7-38

DOUBLE PATENTING, 11-75

DRUGS AND MEDICINES, Chapter 10

DURATION OF PATENT, 11-16

ENABLEMENT, 11-34

ENTRY OF JUDGMENT, 9-1

ESTOPPEL
On summary judgment, 6-24
Prosecution history estoppel, 11-61

EVIDENCE (See also EXPERT WITNESSES)
Demonstratives, 8-28
Exhibits, 8-28
Generally, 8-25
Jury access to, 8-34

EXAMINATION
Generally, 11-10
Reexamination, 11-22
Reissue application, 11-18

EXHIBITS
Embodying products, 7-31
Generally, 8-28

EXPERT WITNESSES
Claim interpretation, opinion contrary to, 7-41
Court appointed, 8-23
Daubert challenges, 7-18
Damages testimony, 7-24
Expert declarations filed in connection with summary judgment motions, 6-13
Fact testimony, 7-28
Inventors, 8-27
Legal insufficiency of testimony, 6-14
Opinions not disclosed in reports, 7-36
Patent law experts, 8-26
Qualifications, 7-22
Rebuttal reports, 7-37
Reliability of analysis, 7-22
Reports as limiting testimony, 7-37, 6-15
Role of, 7-17
Subject matter of testimony, 7-20
Substantive limitations, 7-17
Technical advisors, 8-23
Technical party employees, 8-27
Timeliness of expert opinions, 7-36

FEDERAL CIRCUIT, 11-85

FIRST SALE DOCTRINE, 11-68

INEQUITABLE CONDUCT
Generally, 11-71
Pleading requirements, 2-23
On summary judgment, 6-23

INFRINGEMENT
Contributory infringement, 11-57
Direct infringement, 11-56
Discovery disputes over, 4-14
"Divided" (joint) infringement, 6-22
Doctrine of equivalents, 11-60
Extraterritorial Infringement, 11-66
Generally, 11-56
Indirect infringement, 6-21, 8-29, 11-56
Inducement, 11-57
Joint infringement, 11-57
Literal infringement, 11-58
Non-literal infringement, 11-61
Prior art rule, 11-63
Summary judgment, 6-19

INJUNCTIONS
Generally, 11-77
Motion to bar disclosure that patentee seeks an injunction, 7-42
Permanent injunction, 9-2
Preliminary injunction, Chapter 3
Stay of injunction pending appeal, 9-9

INTERPRETATION OF CLAIMS
Discovery, 4-10
Generally, Chapter 5
Jury deliberations, 8-34
Jury instruction, 7-7
Following remand, 9-10
Motion barring evidence/argument inconsistent with claim construction, 7-40
Motion to preclude reference to an expert's contrary claim construction opinion, 7-41
Summary judgment motions, 6-2

INTERROGATORIES, 4-4

INVALIDITY DEFENSE
Discovery disputes over, 4-14
Generally, 8-30
Presumption of validity, 8-30
Summary judgment, 6-17

INVENTORSHIP, 11-54

JUDGMENT
As a matter of law, 8-33
Entry of, 9-1
Renewed motion for judgment as a matter of law, 9-12

JURISDICTION, 2-29

JURY (See TRIAL)

LACHES
Generally 11-73
On summary judgment, 6-24

LOCAL RULES
Advantages of, 2-8
Claim construction, 2-3
Contentions, 4-2
Depositions, 4-5
District of New Jersey on ANDA cases, 10-7
Lists of local rules, Appendix D
Timetable, 2-11

MARKING
Generally, 11-82
On summary judgment, 6-22

MARKMAN HEARINGS
Accused device, evidence of, 5-20
Analysis stages of, 5-37
Appeal of claim construction decisions, 5-23
Approaches to, 2-3
Briefing, 2-4
Conduct of, 5-18
Discovery, timing of hearings in relation to, 2-3
Experts, 5-18
Extrinsic evidence, 5-33
Federal rules of evidence, applicability of, 5-19
Intrinsic evidence, 5-31
Motion for summary judgment, timing of, 2-6
Motion for new trial, 9-8
Oral argument, 2-4
Preliminary injunction, relation to, 2-7
Pre-*Markman* hearing procedures, 5-5
Prior art, 5-20
Prior claim construction rulings, 5-76
Ruling, 5-22
Settlement, relation to, 2-7
Technology, educating the court 5-12
Trial, applicability to, 5-27

MEANS-PLUS-FUNCTION CLAIMS, 5-69

MEDIATION, 2-38

MOTIONS
Awarding of attorney fees, 9-7
Barring a comparison between the accused product and an embodying product, 7-30
Barring presentation of embodying products as physical exhibits, 7-31
Barring evidence that the accused infringer has patents of its own, 7-32
Barring argument that patent is not infringed because it is invalid, 7-33
Barring untimely disclosures, 7-33
Barring evidence/argument inconsistent with claim construction, 7-40
Barring evidence/argument about dropped claims/patents, 7-41
Barring disclosure that the patentee seeks an injunction, 7-42
Daubert challenge, 7-18
Enhanced damages, 9-5
In limine, 7-29
In limine, as distinguished from summary judgment, 7-39
Judgment as a matter of law, 8-33
New trial, 9-8
Permanent injunction, 9-2
Post-trial, 9-2
Precluding claims or defenses, 7-38
Precluding evidence concerning undisclosed opinions of counsel, 7-43
Precluding reference to an expert's contrary claim construction opinion, 7-41
Precluding reference to related proceedings in the patent office, 7-43
Precluding undisclosed fact witnesses, 7-34
Precluding undisclosed prior art, 7-35
Precluding untimely expert opinions, 7-36
Preliminary injunction, chapter 3
Pretrial conference, 7-3
Protective order, 4-6

MOTIONS, *continued*
Renewed motion for judgment as a matter of law, 9-12
Rule 50, 8-33
Seeking to prevent lay witness opinions and expert witness fact testimony, 7-28

MULTIDISTRICT LITIGATION,
Coordination, 2-32, 11-88
Mediation in, 2-43

NONOBVIOUSNESS
Generally, 11-46
Invalidity defense, 8-30
Jury instructions, 7-8
Judgment as a matter of law, 7-11
Motion to preclude defense, 7-38
Standard, 11-46
Summary judgment, 6-17

NOVELTY,
Generally, 11-37
Summary judgment, 6-19

OBVIOUSNESS (See NONOBVIOUSNESS)

ORANGE BOOK, 10-2

OTHER TYPES OF ACTIONS,
Bankruptcy, 2-25
International Trade Commission Actions, 2-26, 11-87
PTO Actions, 2-27

PATENTABLE SUBJECT MATTER, 11-26

PATENT AGENTS, 11-9

PATENT AND TRADEMARK OFFICE
Board of Patent Appeals and interferences, 11-9
Generally, 11-4
Governing laws, 11-10
Manual of Patent Examining Procedure (MPEP), 11-10
Petition and appeals to, 11-16

PATENT ATTORNEYS
Access to confidential information, 4-20
Discoverability of patent attorney's files, 4-18

PATENT DOCUMENT, 11-4

PATENT CLAIMS (See CLAIMS)

PERMANENT INJUNCTION, 11-78

PLEADINGS
Complaints, infringement, 2-20
Objective good-faith basis for filing, 2-28

POST-TRIAL MOTIONS (See MOTIONS)

PREFERRED EMBODIMENT
Generally, 11-35
Role in claim construction, 5-51

PRELIMINARY INJUNCTIONS, Chapter 3

PRETRIAL MOTIONS (See MOTIONS)

PRIOR ART (See also NOVELTY)
Effect on claim construction, 5-57
Motion precluding undisclosed prior art, 7-35

PROSECUTION, 11-8

PROSECUTION HISTORY ESTOPPEL, 11-61

PROTECTIVE ORDERS, 4-6, Appendix 4-1

REEXAMINATION OF PATENTS
Bifurcation or stay of discovery pending reexamination, 4-15
Generally, 11-22

REISSUE, 11-18

REMAND, 9-10

REMEDIES (See also DAMAGES, INJUNCTIONS), 11-77

REVERSE DOCTRINE OF EQUIVALENTS, 11-65

ROYALTIES
Ongoing after permanent injunction, 9-4
Reasonableness of, 11-80

SETTLEMENT
Encouragement of, 2-38
Generally, 1-3
Hatch-Waxman infringement suits, 10-9
Likelihood of, 2-44
Reverse payments, 10-9

SPECIAL MASTER, 8-23

STANDING TO SUE, 2-13

STATUTORY BARS, 11-37

STAY OF LITIGATION, 4-15

SUBJECT MATTER, 11-26

SUBJECT MATTER JURISDICTION
ANDA cases, 10-4
Generally, 2-29

SUMMARY JUDGMENT
Claim interpretation, 6-2
Damages, 6-22
Dual-track approach, 6-3
Estoppel, 6-24
Expert declarations, 6-13
Expert testimony beyond the scope of the expert report, 6-15
Generally, 6-1
Graphics, 6-12
Hearing, 6-11
Indefiniteness, 6-19
Inequitable conduct, 6-24
Infringement, 6-19
Invalidity, 6-17
Laches, 6-24
Letter briefs, 6-9
Limitation of number or length of motions, 6-10
Live testimony, 6-12

SUMMARY JUDGMENT, *continued*
Marking, 6-22
Motion in limine, as distinguished from summary judgment, 7-39
Multiple rounds, 6-11
Narrowing of trial issues, 6-16
Nonobviousness, 6-18
Novelty, 6-19
Streamlining the process, 6-8
Technology tutorial, 6-12
Territoriality of infringement, 6-21
Validity, 6-17
Willful infringement, 6-23

SUPPRESSION, 11-41

TEMPORARY RESTRAINING ORDERS, 3-17

TERM OF PATENT, 11-16

TIMING ISSUES
ANDA cases, 10-6
Attorney fees, 9-7
Disclosures, 7-33
Enhanced damages motion, 9-5
Jury instructions, 8-18, 7-5
Markman hearings, 5-4
Pretrial conference, 7-2
Summary judgment, 6-2
Trial length, 8-10

TRADE SECRETS
Bifurcation from patent cause of action, 8-8
Protective orders, 4-6

TREBLE DAMAGES, 9-5, 11-83

TRIAL (See also BIFURCATION, PRETRIAL)
Advisory jury, 8-5
Attorney argument, 8-29
Bench trial, 8-37
Closing statements, 8-15
Confidential advisors, 8-22
Demonstratives, 8-28
Evidentiary issues generally, 8-25
Exclusion of witnesses, 8-16
Exclusion of public, 8-16
Exhibits, 8-28
Experts, court-appointed, 8-23
Jury access to evidence, 8-34
Jury deliberations, 8-34
Jury instructions, 7-4, 8-18, Appendix E
Jury management, 8-17
Jury selection and voir dire, 8-17
Jury instructions, 8-18, 7-4
Logistics, 8-9
Motion for judgment as a matter of law, 8-33
Motion for a new trial, 9-8
Narrowing trial issues, 6-15
Patent law experts, 8-25
Presentation of evidence, 8-13
Pretrial conference, 7-2
Procedural issues, 8-2
Schedule, 8-13, 7-3
Special interrogatories, 8-36
Special master, 8-22
Time limits, 8-10
Verdict forms, 8-36
Witnesses, 8-26

UTILITY, 11-31

UNENFORCEABILITY, 2-23

VALIDITY (See also INVALIDITY DEFENSE)
Generally, 11-26
Pleading of, 2-18
Presumption of, 11-26
Presumption of validity instruction, 7-7
Summary judgment, 6-17

VERDICT FORMS, 8-36

VENUE, 2-30

VOIR DIRE, 8-17

WILLFUL INFRINGEMENT
Bifurcation, 8-6
Entry of judgment, 9-1
Enhanced damages, 9-5
Jury instructions, 7-11
Summary judgment, 6-23

WITNESSES (See also EXPERT WITNESSES)
Exclusion of, 8-16
Generally, 8-26
Inventors, 8-27
Opinion testimony, 7-28
Time limits on examinations, 8-11
Presentation of, 8-15
Undisclosed fact witnesses, 7-34

WORK PRODUCT PRIVILEGE
Claw-back provisions, 4-8
Patent attorney work, 4-19

WRITTEN DESCRIPTION, 11-32

The Federal Judicial Center

Board
The Chief Justice of the United States, *Chair*
Judge Susan H. Black, U.S. Court of Appeals for the Eleventh Circuit
Judge David O. Carter, U.S. District Court for the Central District of California
Magistrate Judge Karen Klein, U.S. District Court for the District of North Dakota
Judge Loretta A. Preska, U.S. District Court for the Southern District of New York
Judge Philip M. Pro, U.S. District Court for the District of Nevada
Judge Stephen Raslavich, U.S. Bankruptcy Court for the Eastern District of Pennsylvania
Judge William B. Traxler, Jr., U.S. Court of Appeals for the Fourth Circuit
James C. Duff, Director of the Administrative Office of the U.S. Courts

Director
Judge Barbara J. Rothstein

Deputy Director
John S. Cooke

About the Federal Judicial Center

The Federal Judicial Center is the research and education agency of the federal judicial system. It was established by Congress in 1967 (28 U.S.C. §§ 620–629), on the recommendation of the Judicial Conference of the United States.

By statute, the Chief Justice of the United States chairs the Center's Board, which also includes the director of the Administrative Office of the U.S. Courts and seven judges elected by the Judicial Conference.

The organization of the Center reflects its primary statutory mandates. The Education Division plans and produces education and training programs for judges and court staff, including satellite broadcasts, video programs, publications, curriculum packages for in-court training, and Web-based programs and resources. The Research Division examines and evaluates current and alternative federal court practices and policies. This research assists Judicial Conference committees, who request most Center research, in developing policy recommendations. The Center's research also contributes substantially to its educational programs. The two divisions work closely with two units of the Director's Office—the Systems Innovations & Development Office and Communications Policy & Design Office—in using print, broadcast, and on-line media to deliver education and training and to disseminate the results of Center research. The Federal Judicial History Office helps courts and others study and preserve federal judicial history. The International Judicial Relations Office provides information to judicial and legal officials from foreign countries and assesses how to inform federal judicial personnel of developments in international law and other court systems that may affect their work.